INSTRUKCJA MONTAŻU

Komoda 150 cm z 3 drzwiczkami z ryflowanym frontem w kratkę

Kolor: Dąb Artisan / Granat

Kod produktu: OR10215

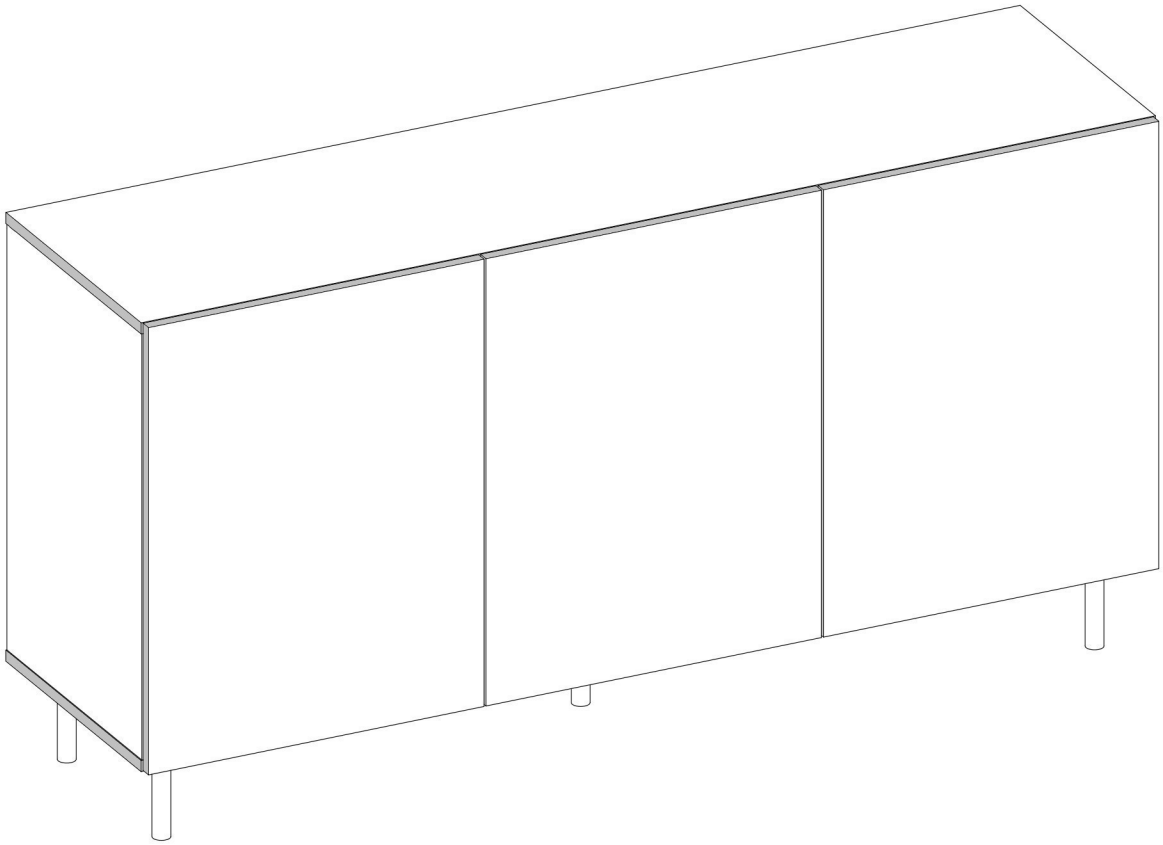

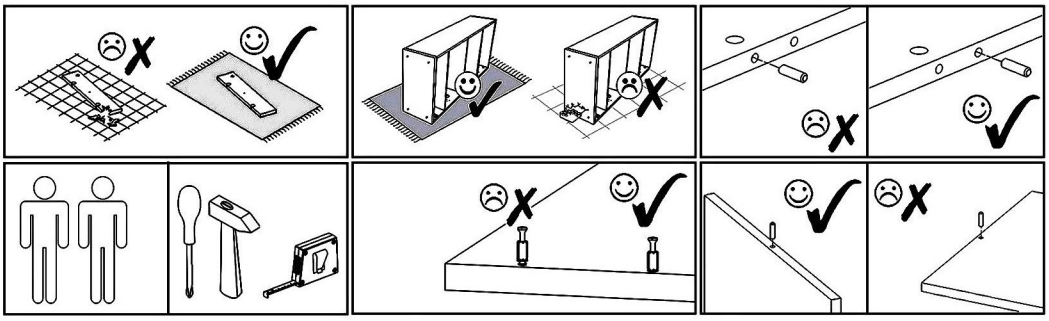

V30 x20							
B5 x6	T5 x5	B1 CZ ø17/5-4mm x16	B1 S-A ø17/5-4mm x16	V7 x3	S7 4x16mm x20	A3 ZB x2	V13 x1
Z1 x20	A1 ZP x4	S1 3,5x16mm x12	M1 12x15mm x16	E1 8x30mm x16	V16 5x16mm x12	N1 L=35mm x16	R1 6x8mm x6

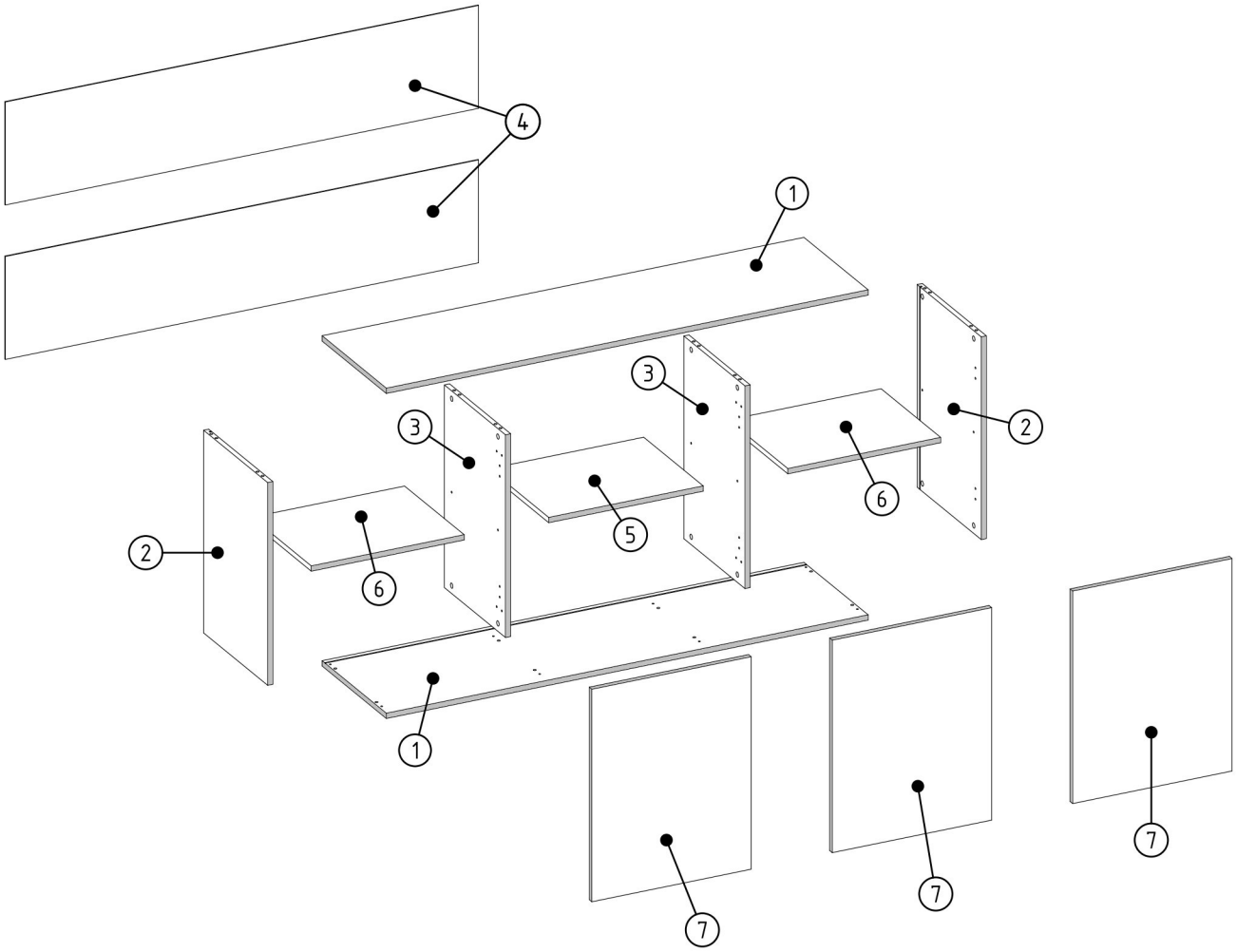

1	x	2
2	x	2
3	x	2
4	x	2
5	x	1
6	x	2
7	x	3

N1



L=35mm x16

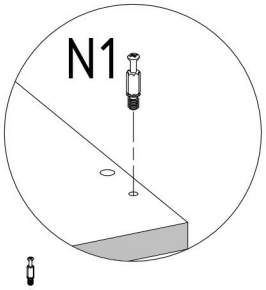

x2

1

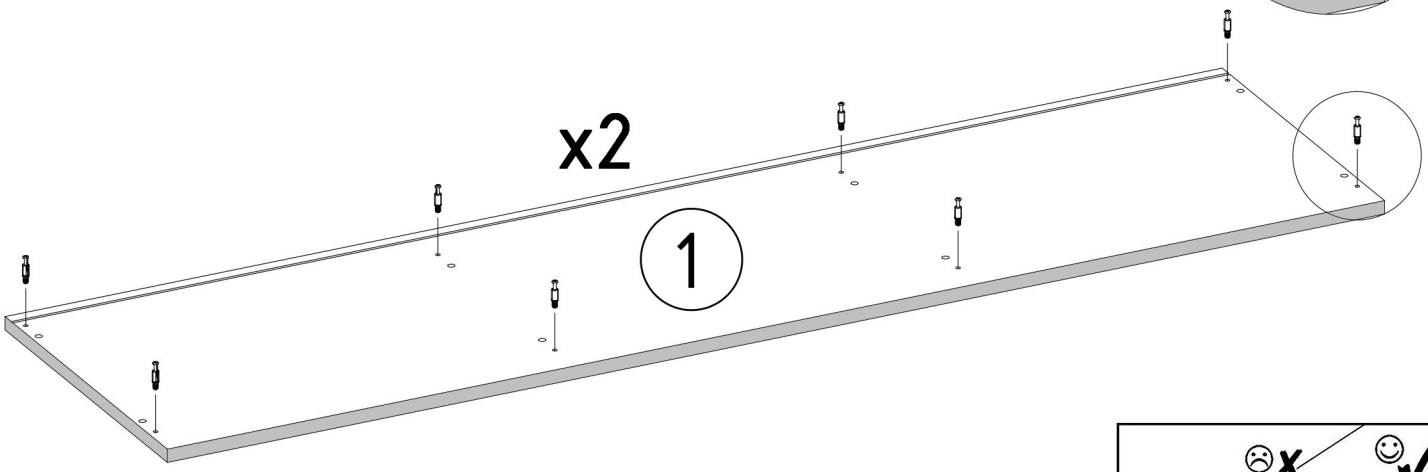

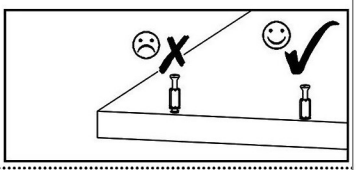

M1



12x15mm x8

V16



5x16mm x4

E1



8x30mm x8

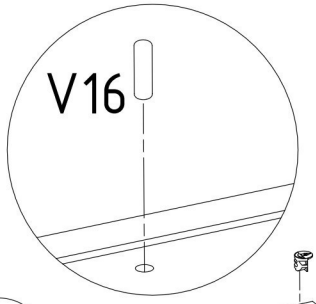

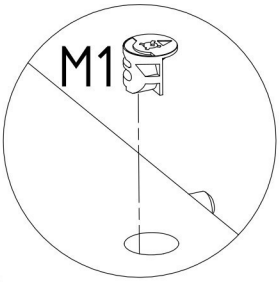

2

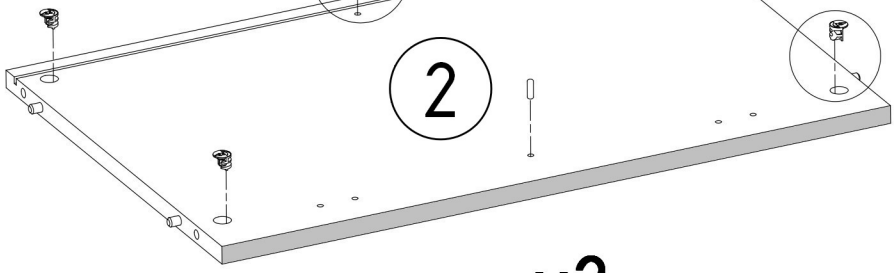

x2

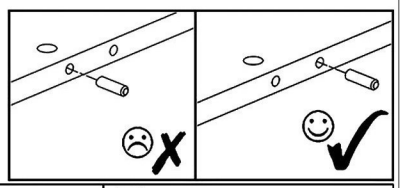

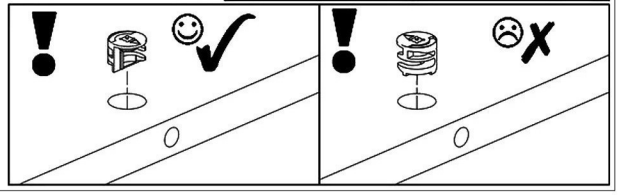

M1	V16	E1
		
12x15mm x8	5x16mm x8	8x30mm x8

x2

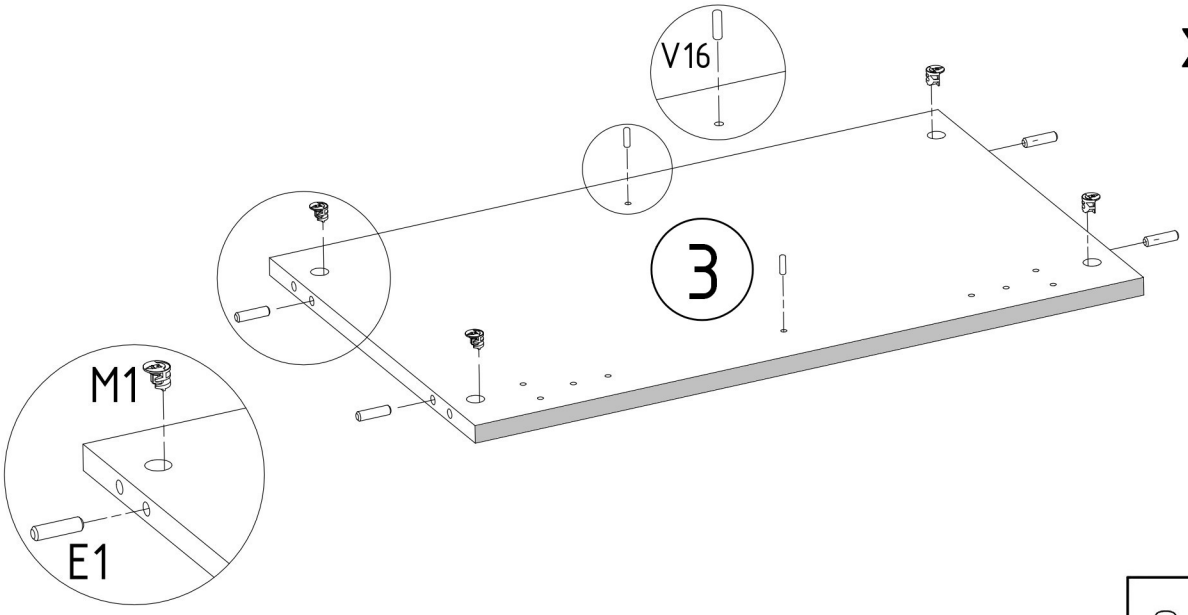

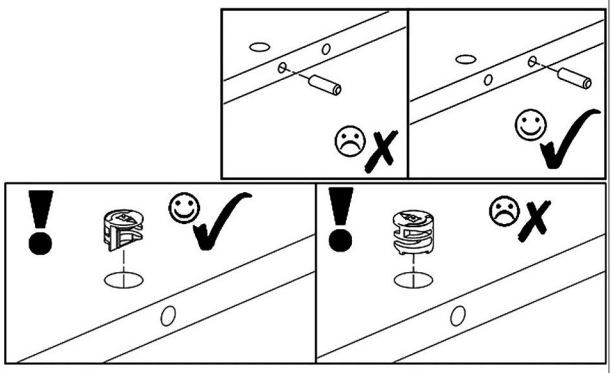

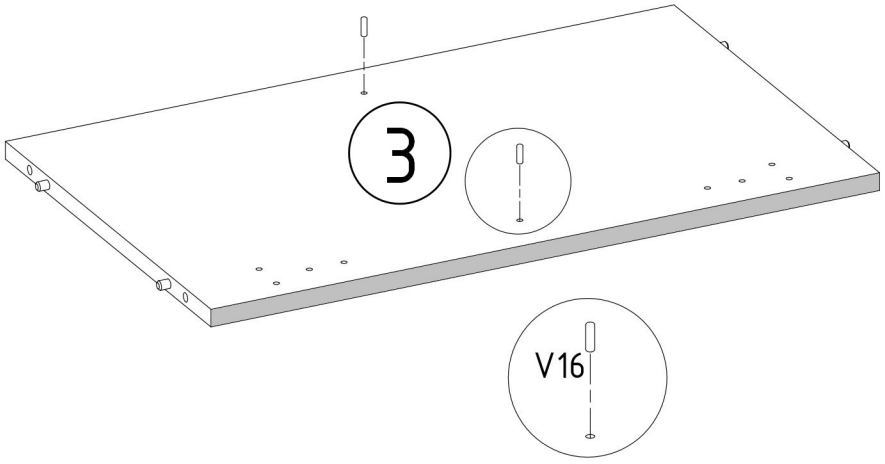

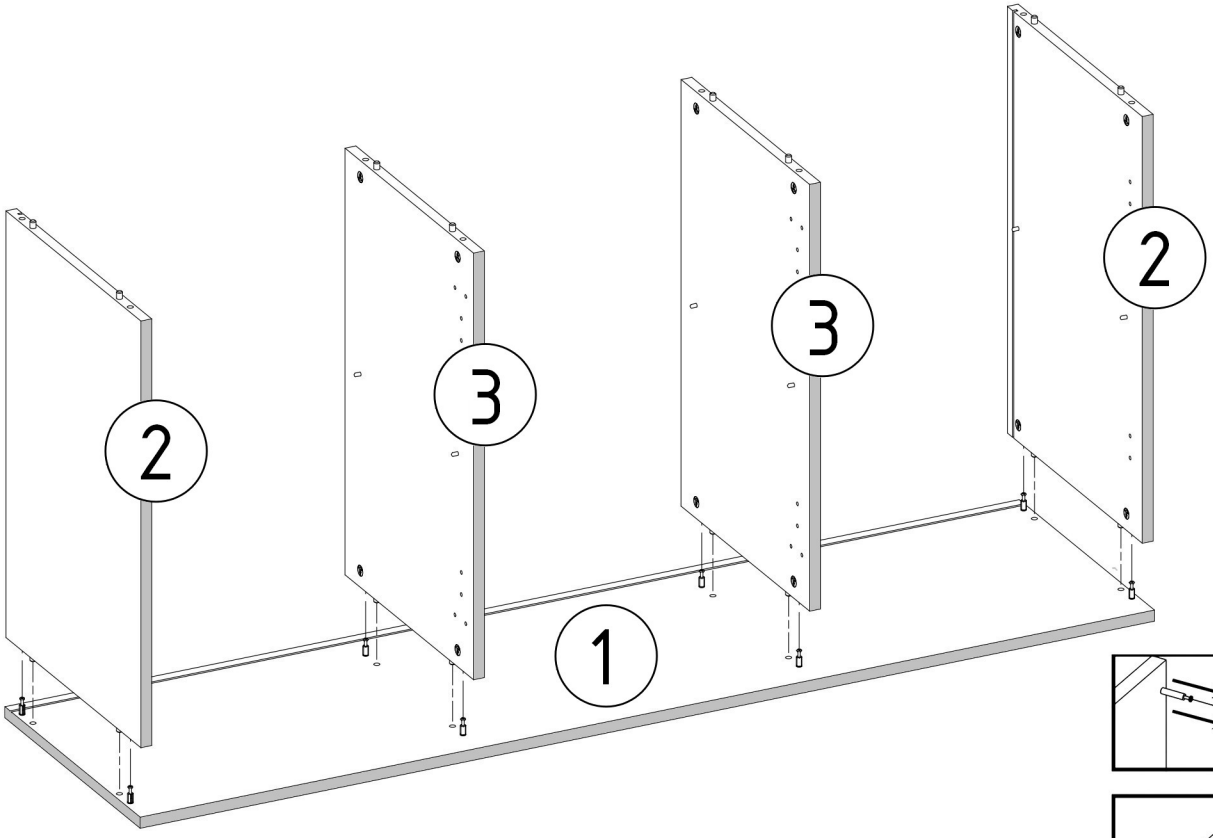
2
3
3
2
1

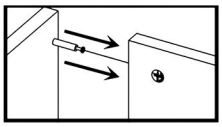

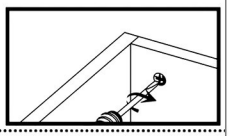

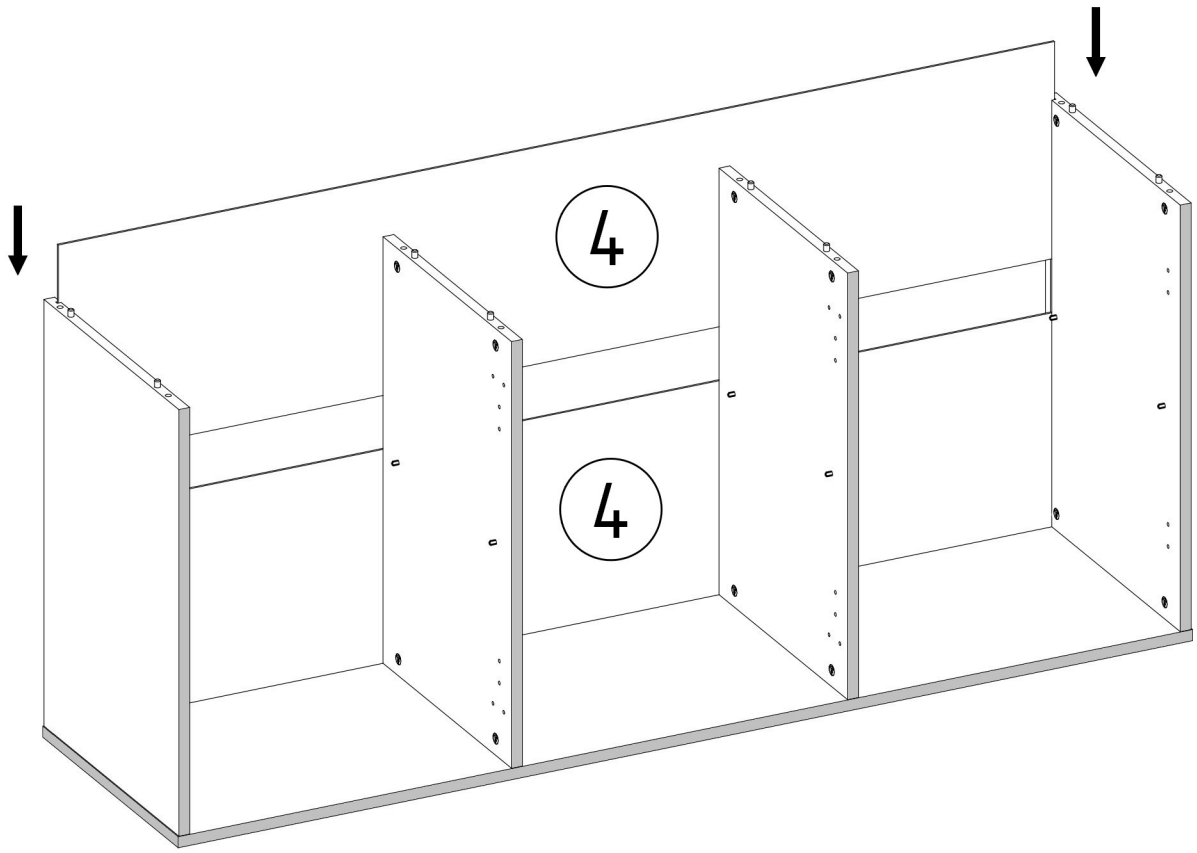
4
4

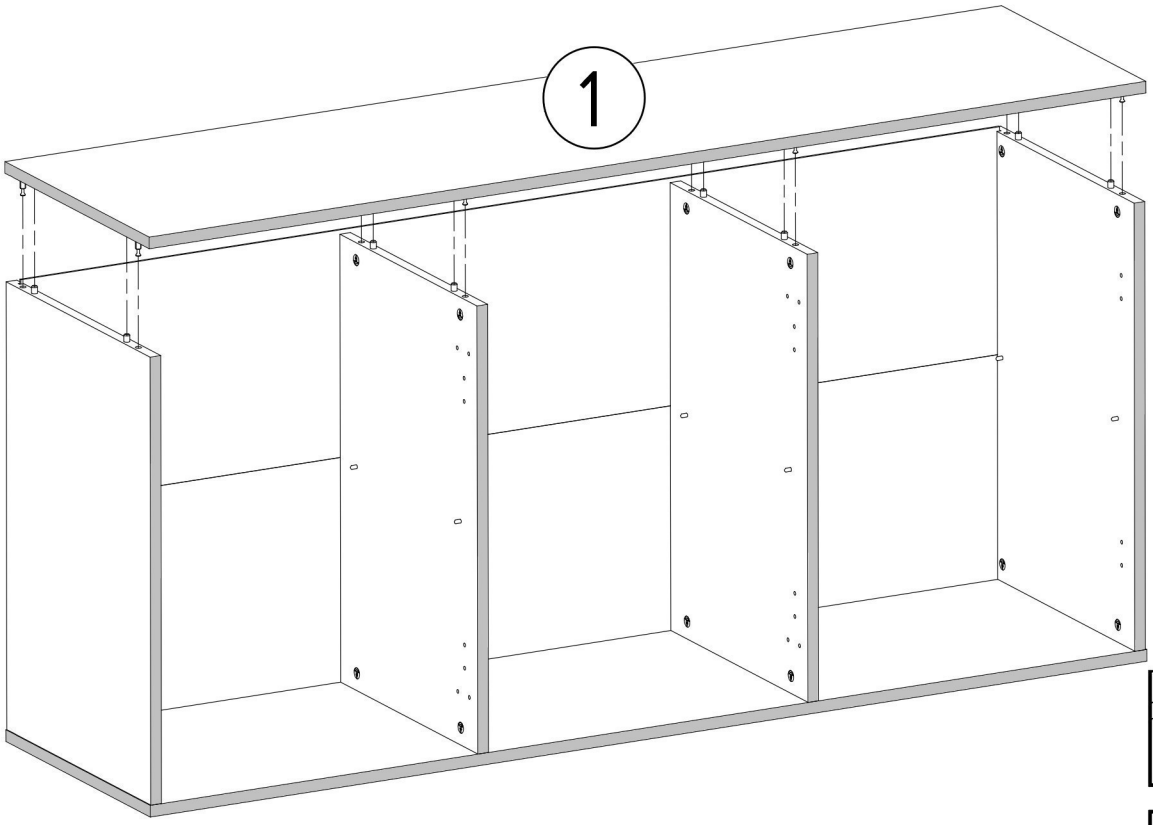

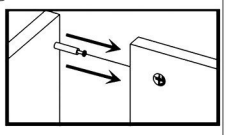

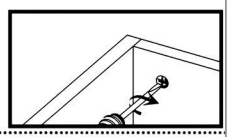

Z1	V30
x20	x20

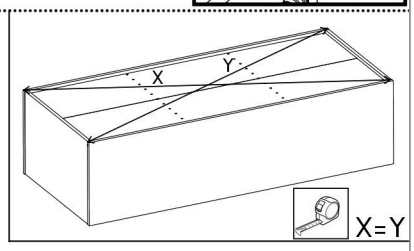

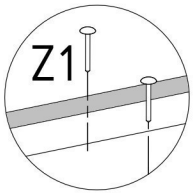

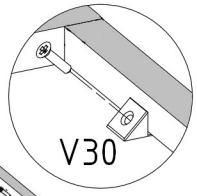

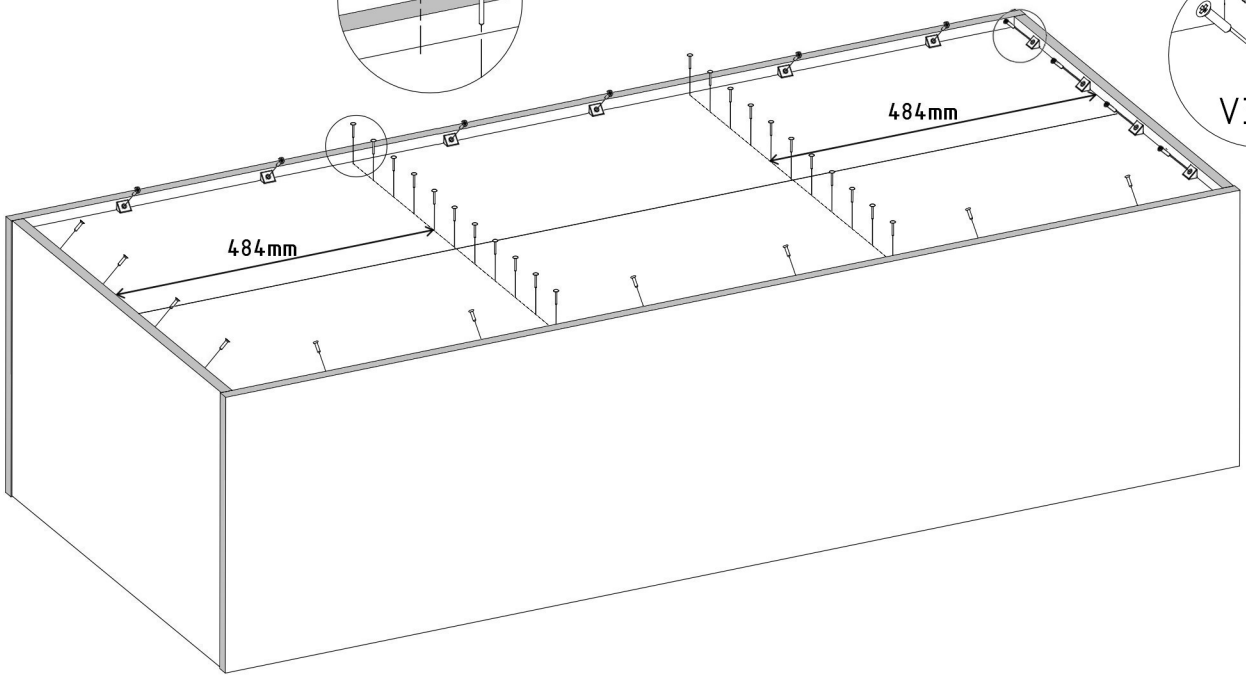

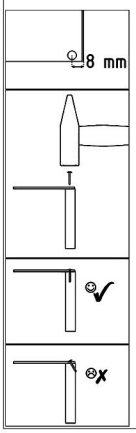

B1	S7	T5
ø17/5-4mm x16	4x16mm x20	x5

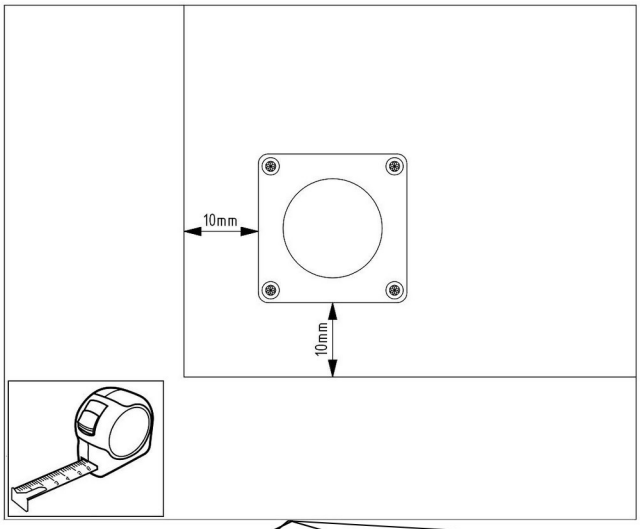

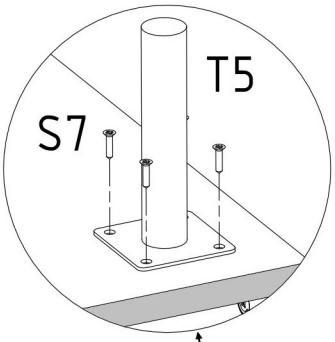

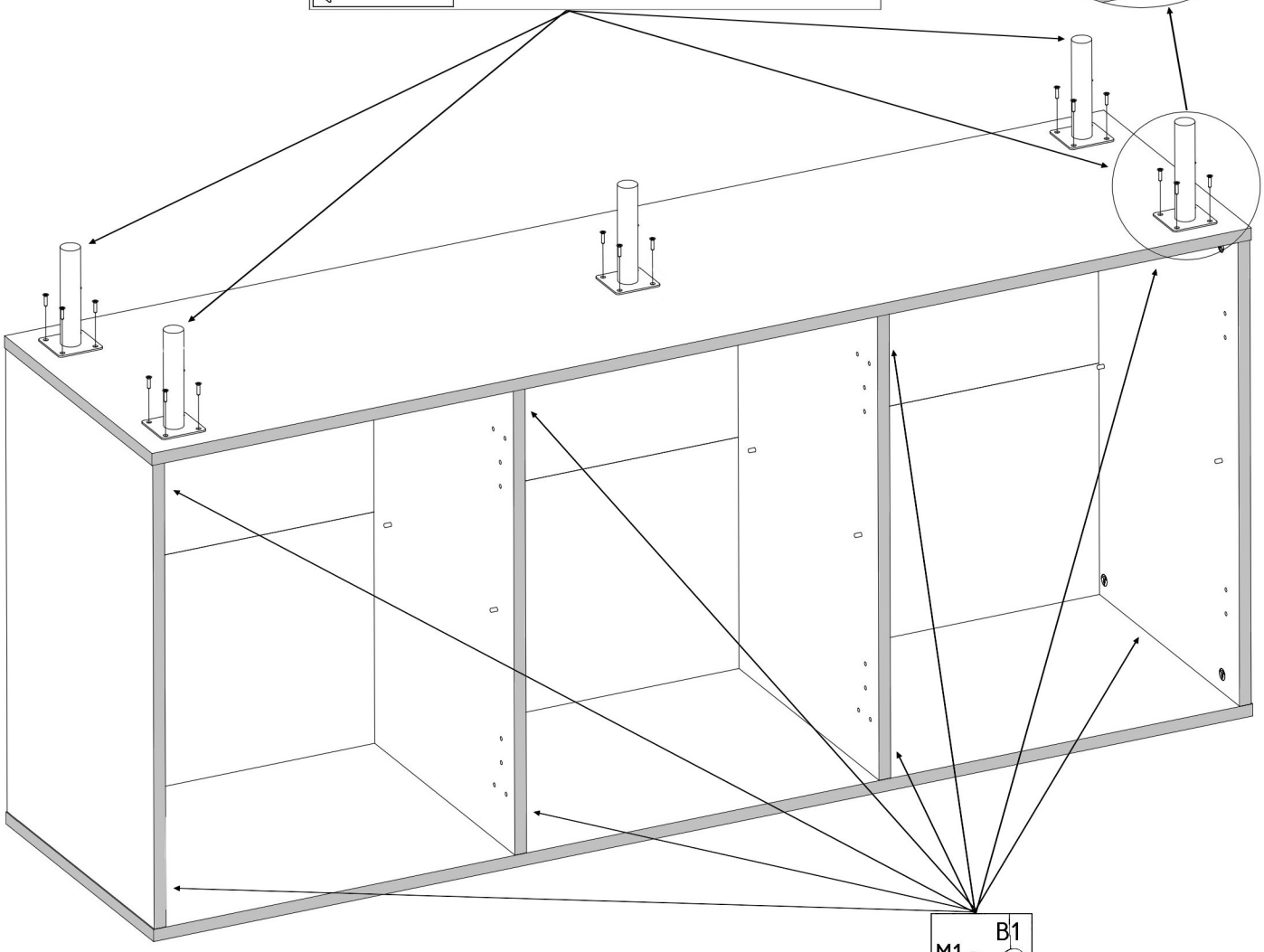

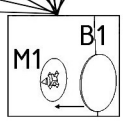

A1	S1	B5	A3
			
ZP x4	3,5x16mm x12	x6	ZB x2

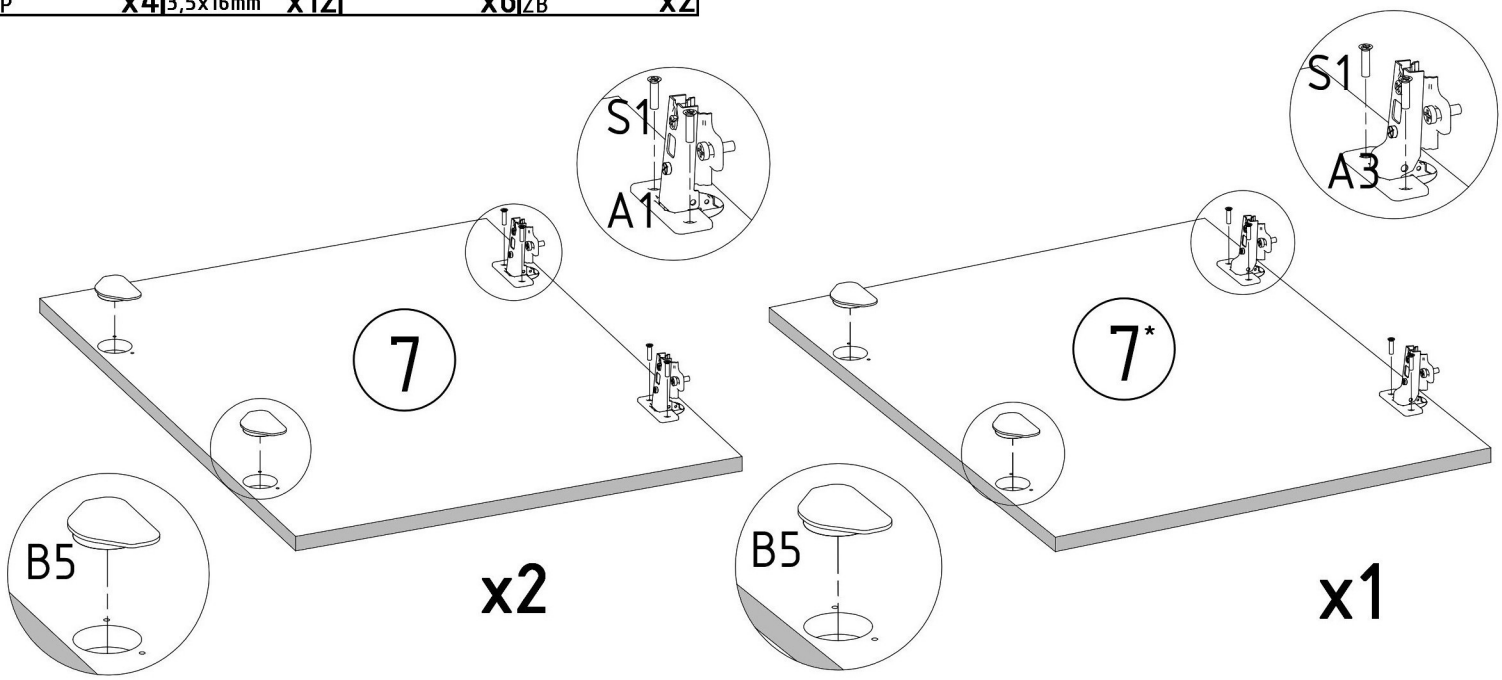

V7	R1
	
x3	6x8mm x6

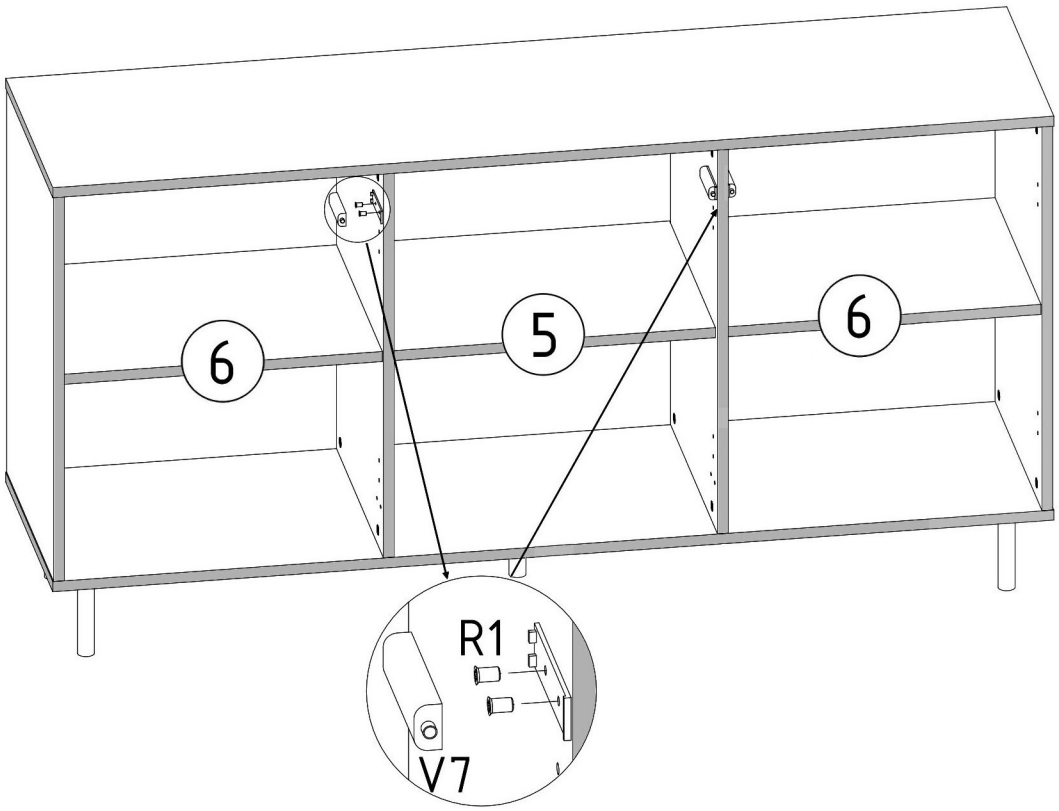

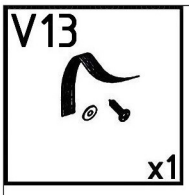
V13
x1

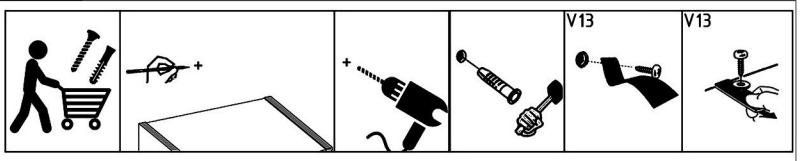
V13
V13

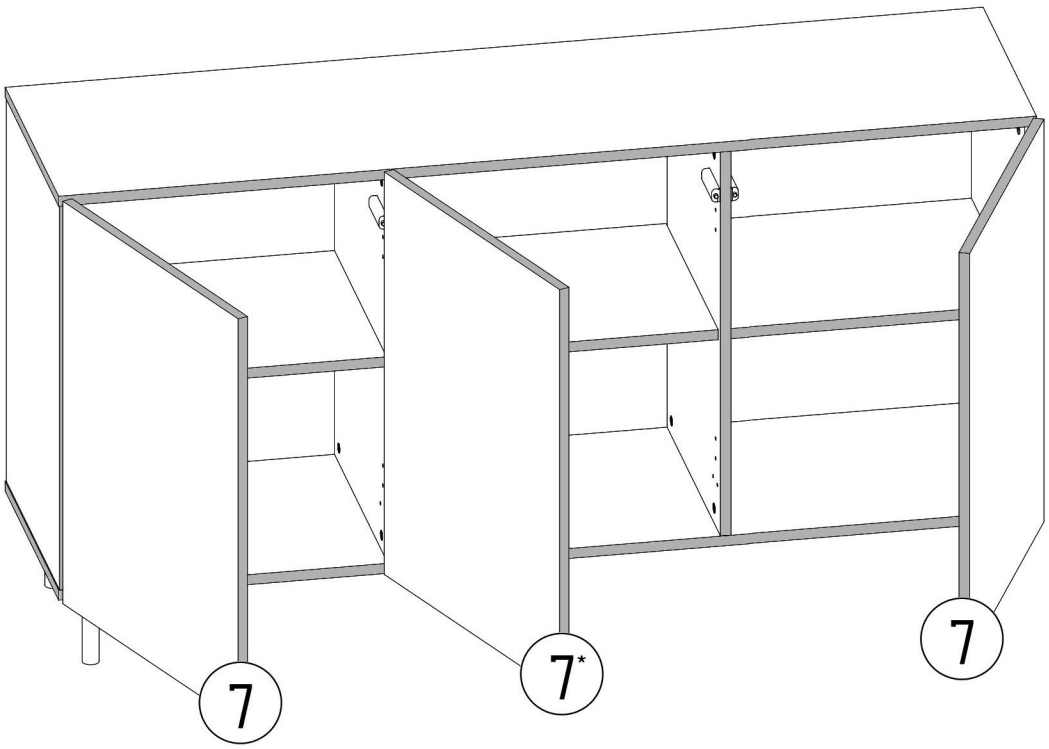
7
7*
7

