INSTRUKCJA MONTAŻU

Biurko 98 cm z 4 szufladami po prawej i nadstawką z półkami, 146 cm

Kolor: Biały

Kod produktu: OR10370

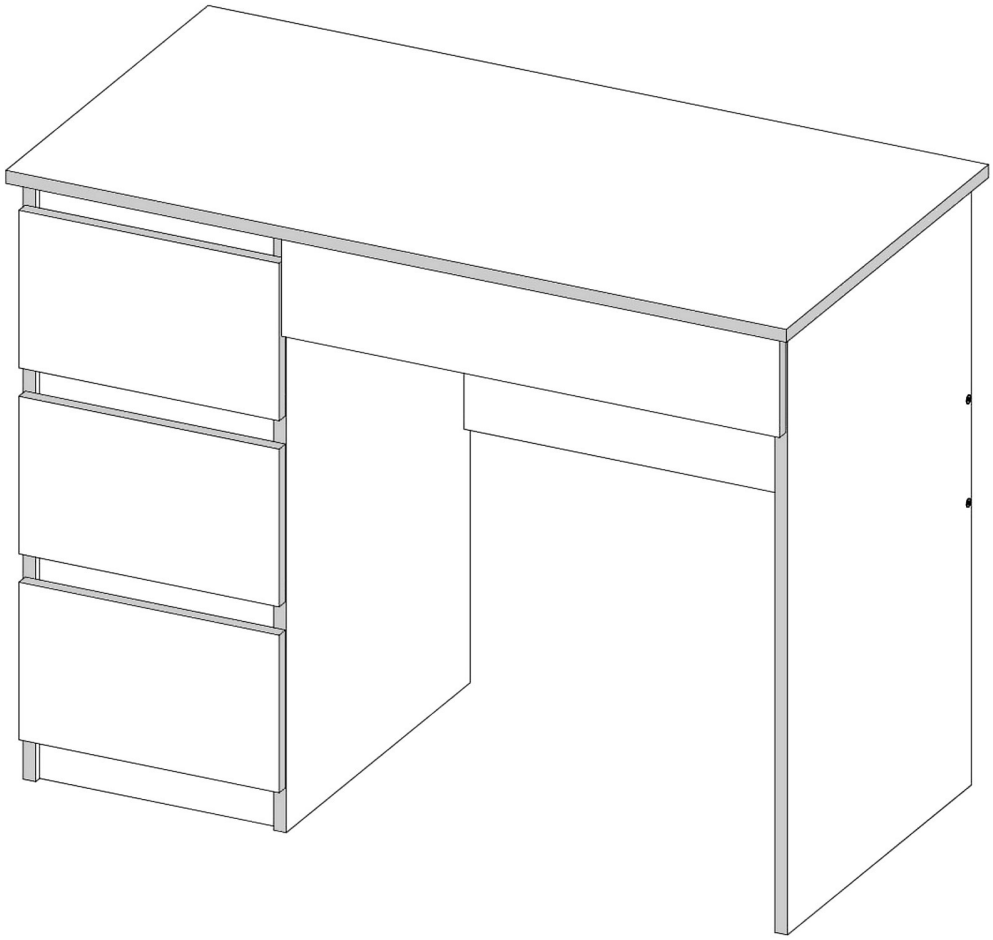

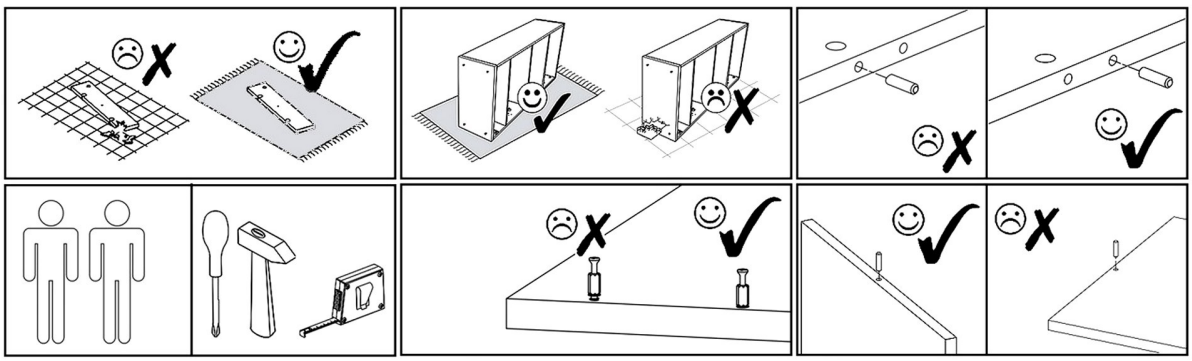

B2 K ø12/5mm x2	B2 G ø12/5mm x2						
Z1 x55	P4 L=400mm x3	P2 L=300mm x1	V12 GLUE x1	B1 B ø17/4mm x8	B2 B ø12/5mm x2	B2 S/A ø12/5mm x2	B2 Ant ø12/5mm x2
M1 12x15mm x24	N1 L=35mm x24	E1 8x30mm x19	F1 7x50mm x12	F3 Hex 4mm x1	R1 6x8mm x16	S1 3,5x16mm x16	T1 x6

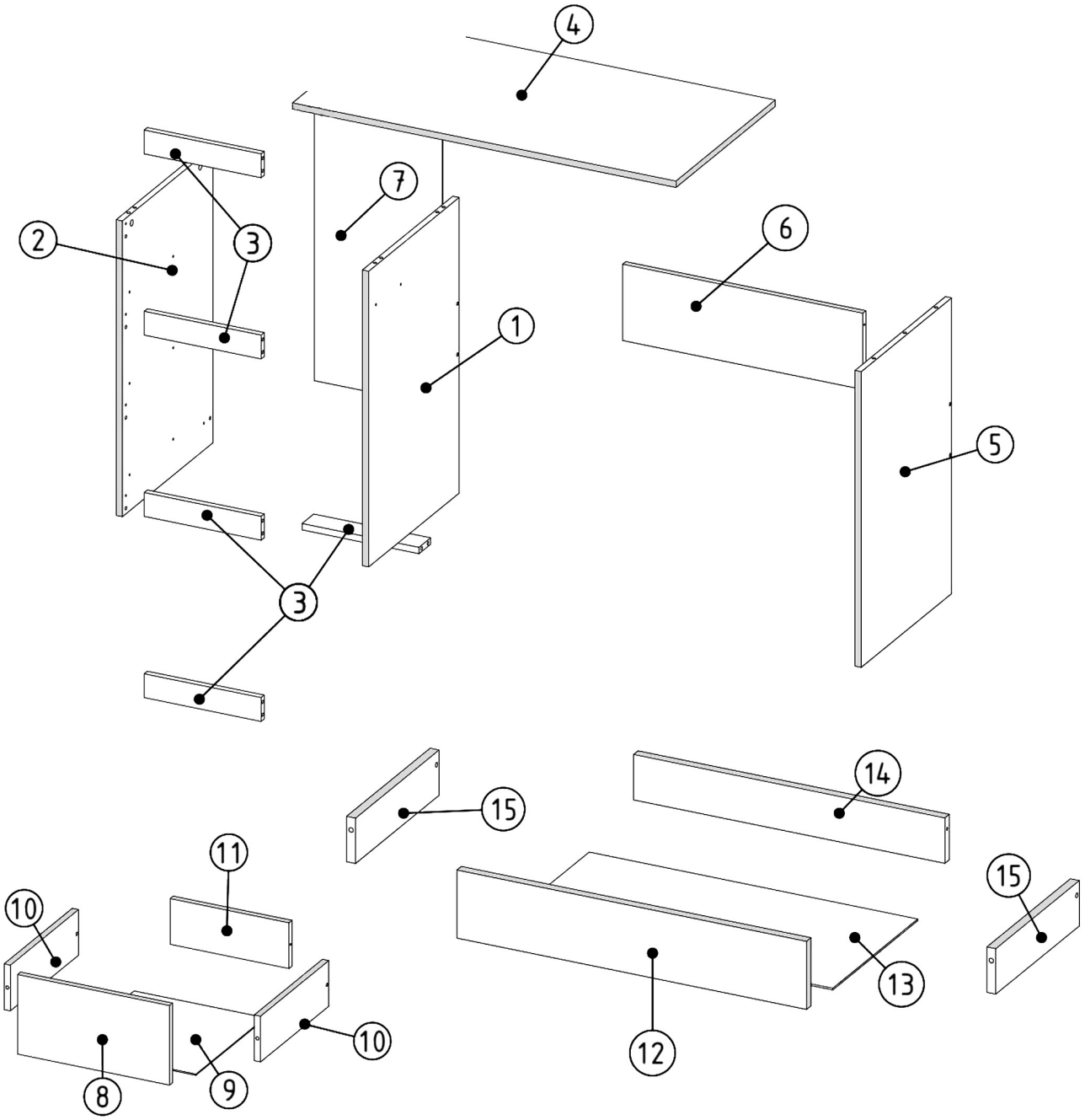

000032	15	2
000107	14	1
000034	13	1
000423	12	1
000007	11	3
000083	10	6
000021	9	3
000044	8	3
000147	7	1
000133	6	1
000426	5	1
000424	4	1
000030	3	6
000425	2	1
000427	1	1
ID	NUMBER	QUANTITY

N1	M1	E1	R1	P4	T1
L=35mm x6	12x15mm x2	8x30mm x2	6x8mm x6	L=400mm x3	x2

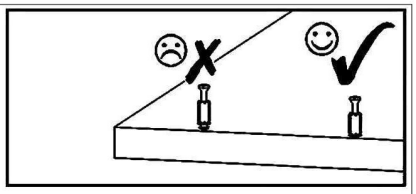

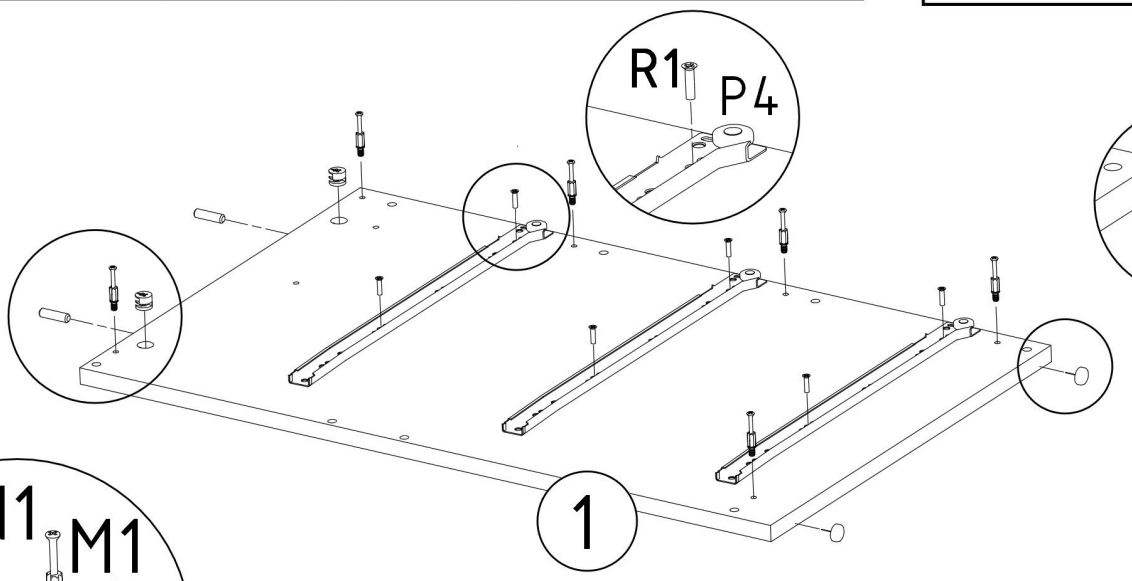

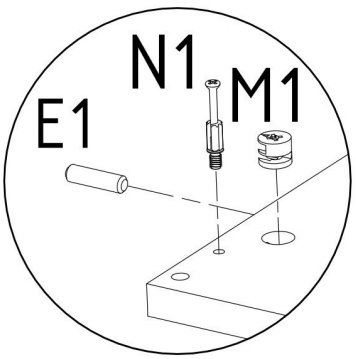

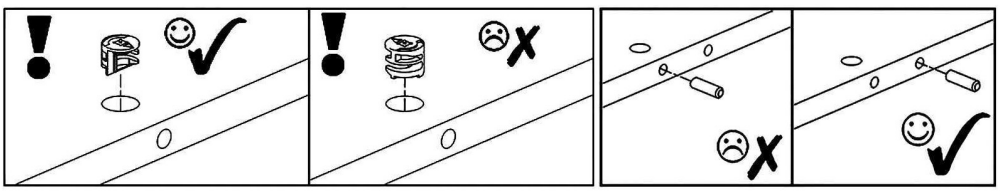

N1	M1	E1	R1	P4	T1
L=35mm x6	12x15mm x2	8x30mm x2	6x8mm x6	L=400mm x3	x2

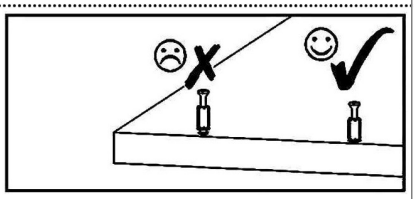

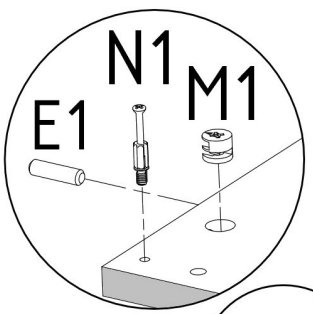

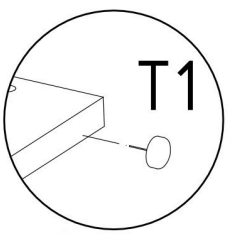

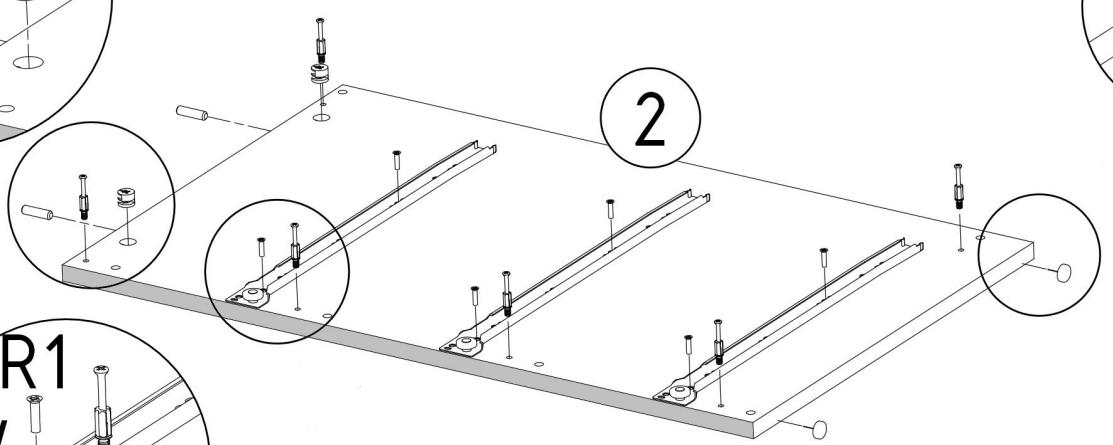

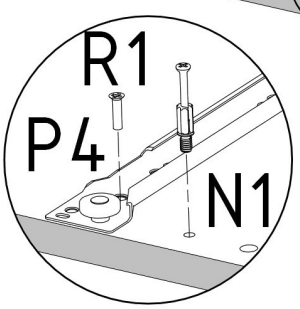

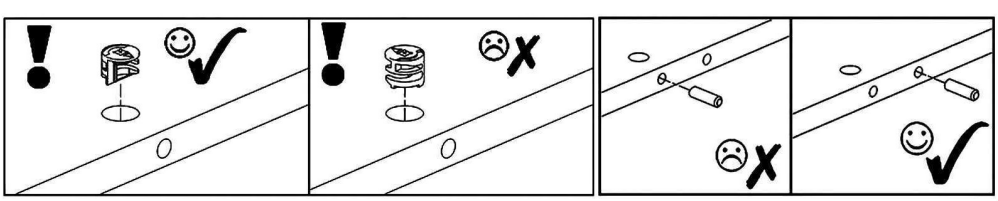

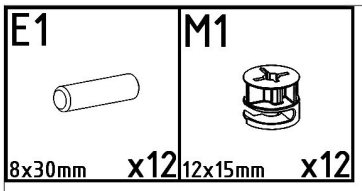

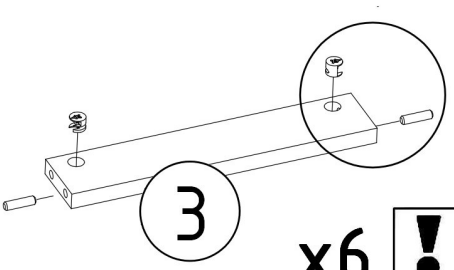

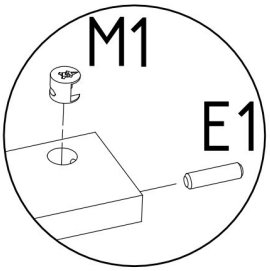

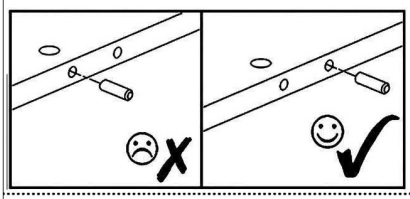

x6

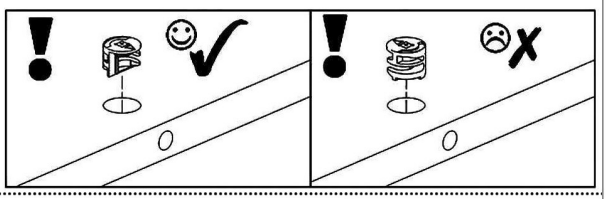

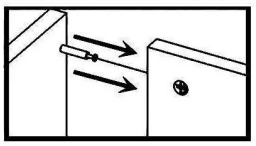

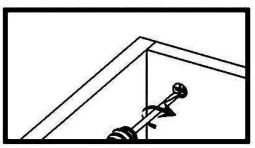

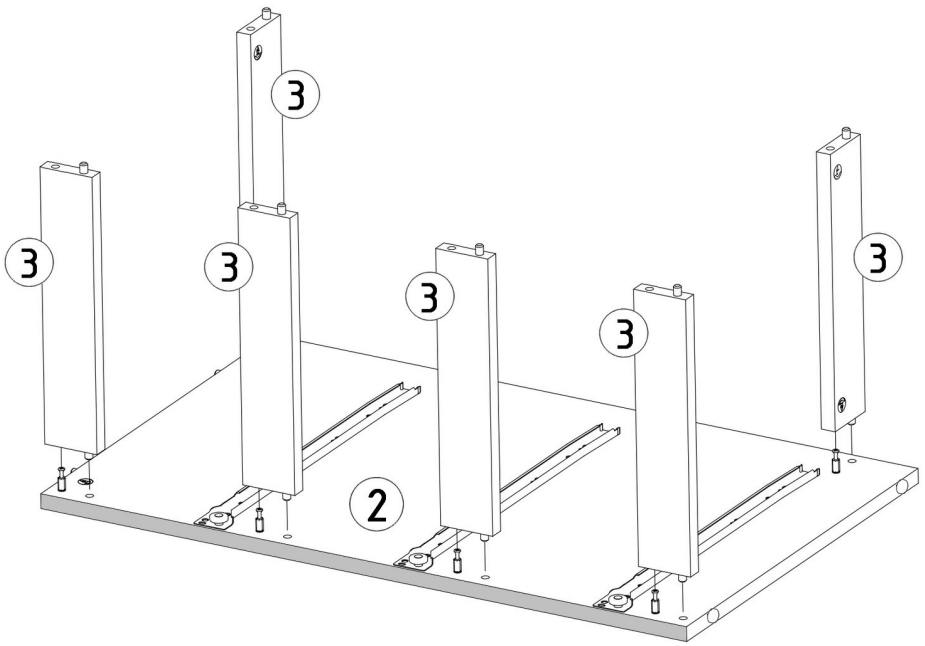

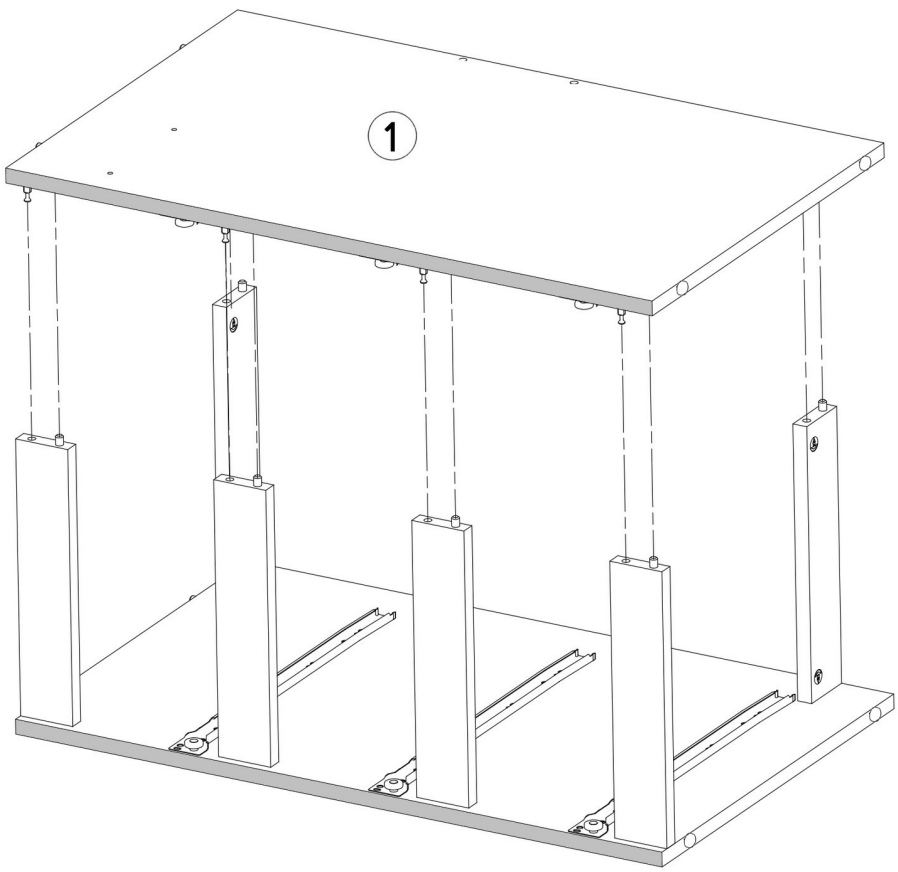

E1	T1	V12
 8x30mm x3	 x2	

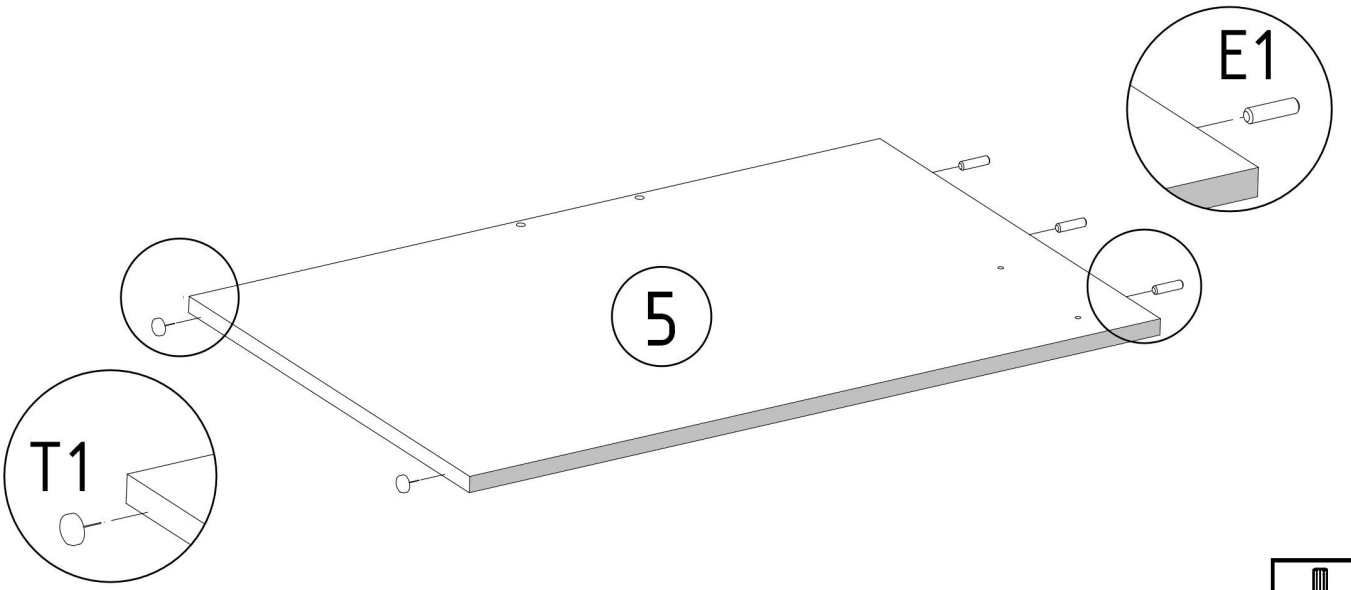

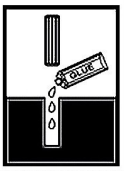

F1	F3
 7x50mm x4	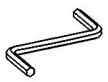 Hex 4mm

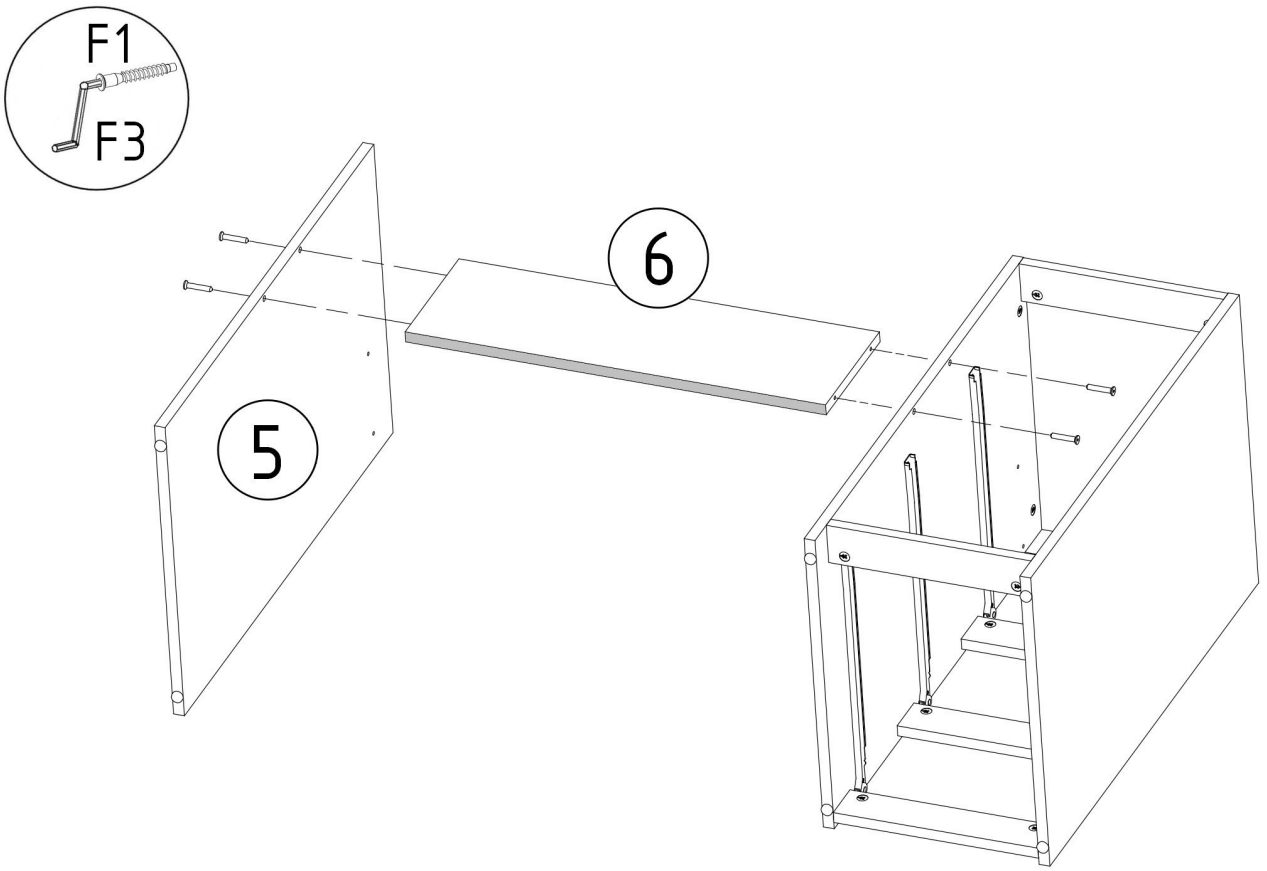

N1



L=35mm x4

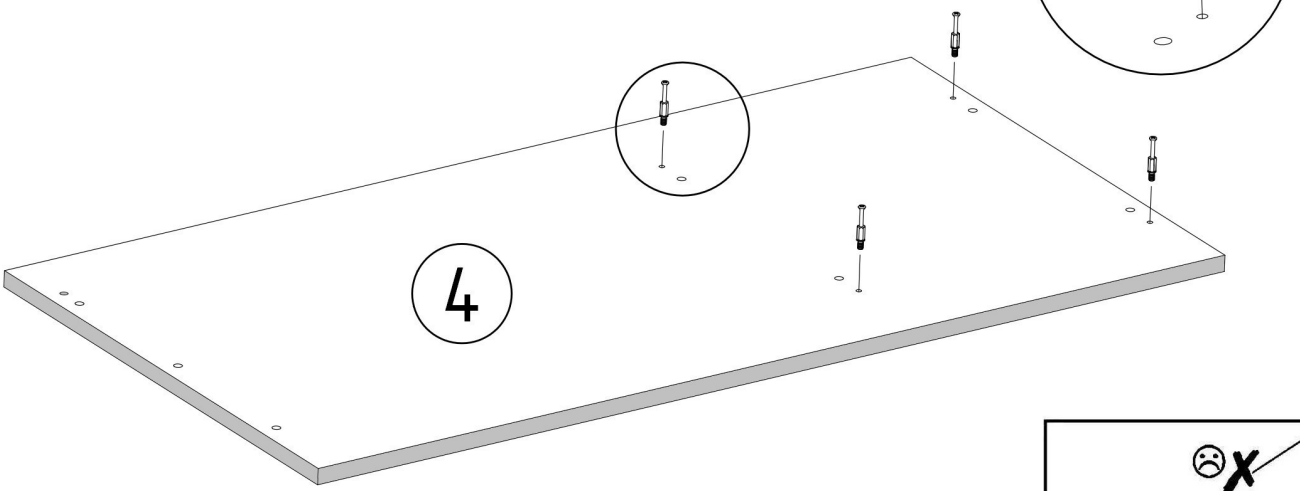

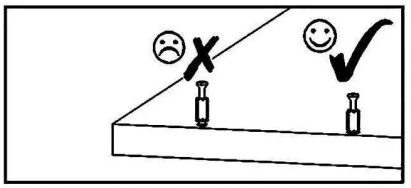

V12



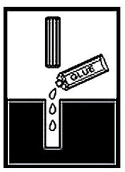

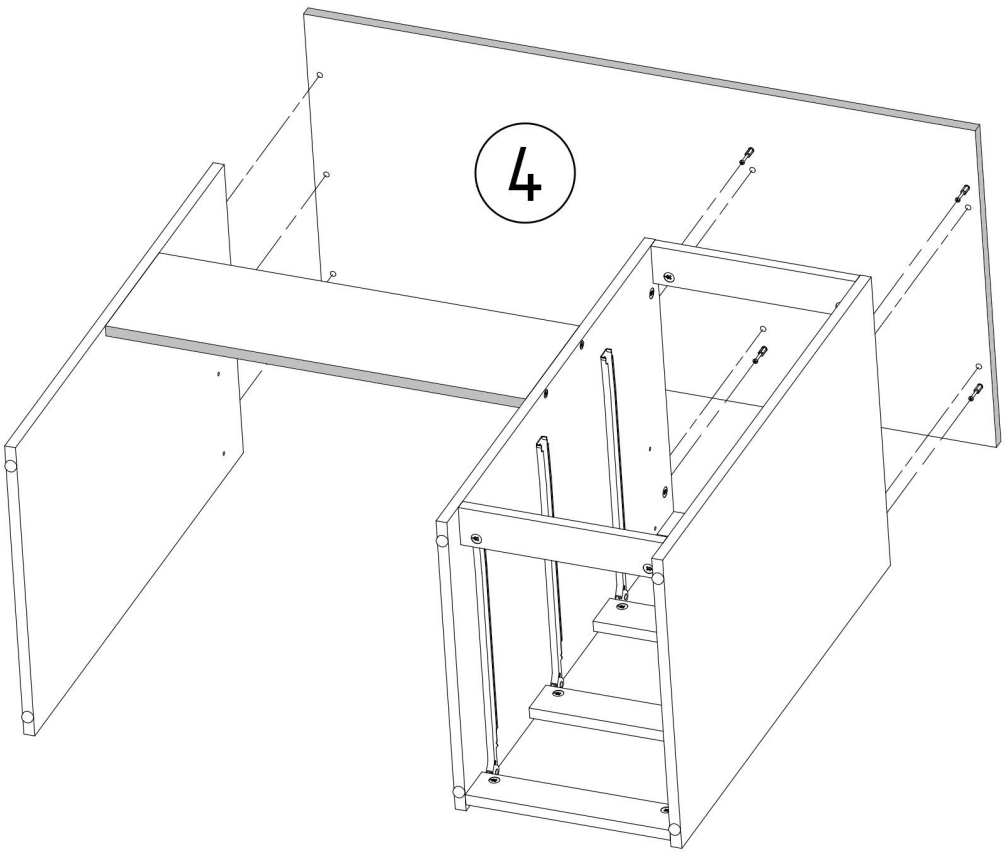

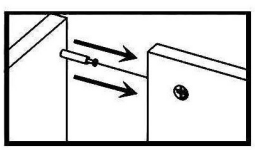

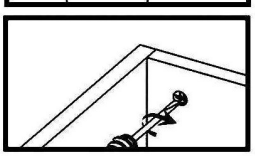

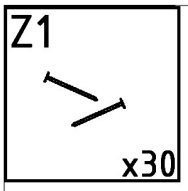
Z1
x30

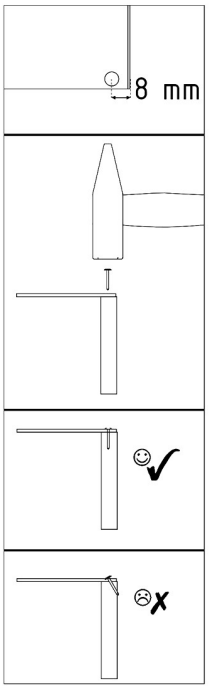
8 mm

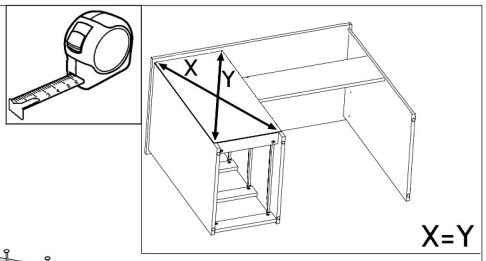
X
Y
X=Y

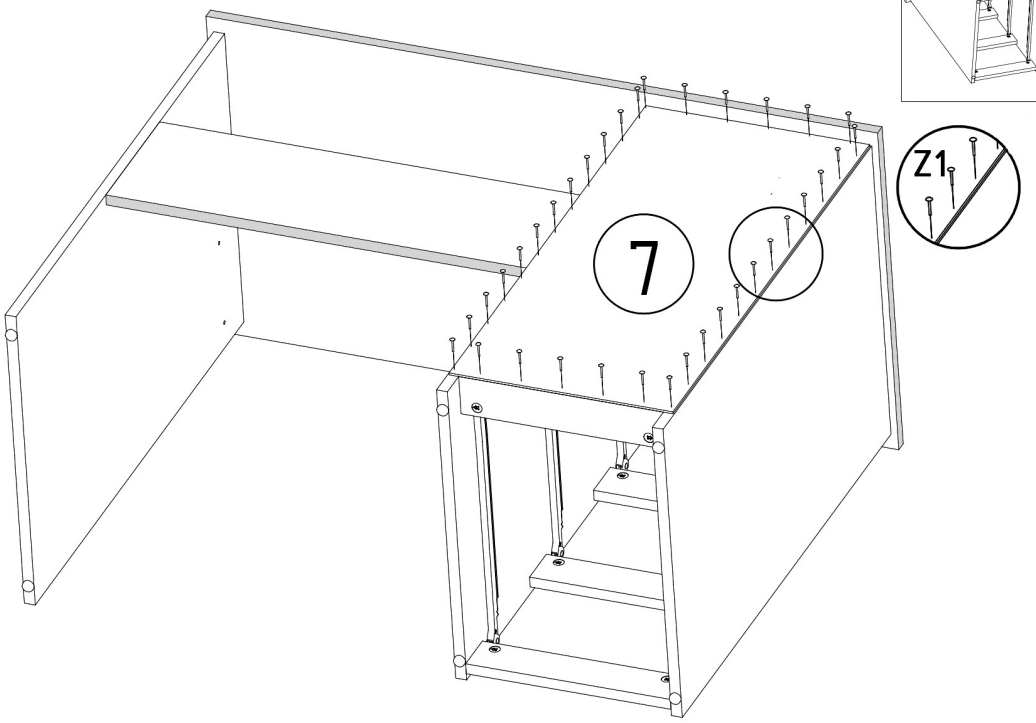
7
Z1

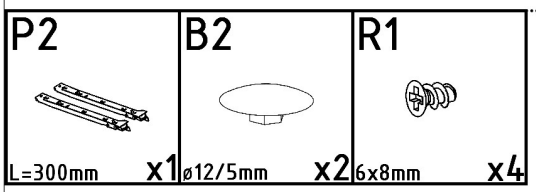
P2
L=300mm
x1
B2
ø12/5mm
x2
R1
6x8mm
x4

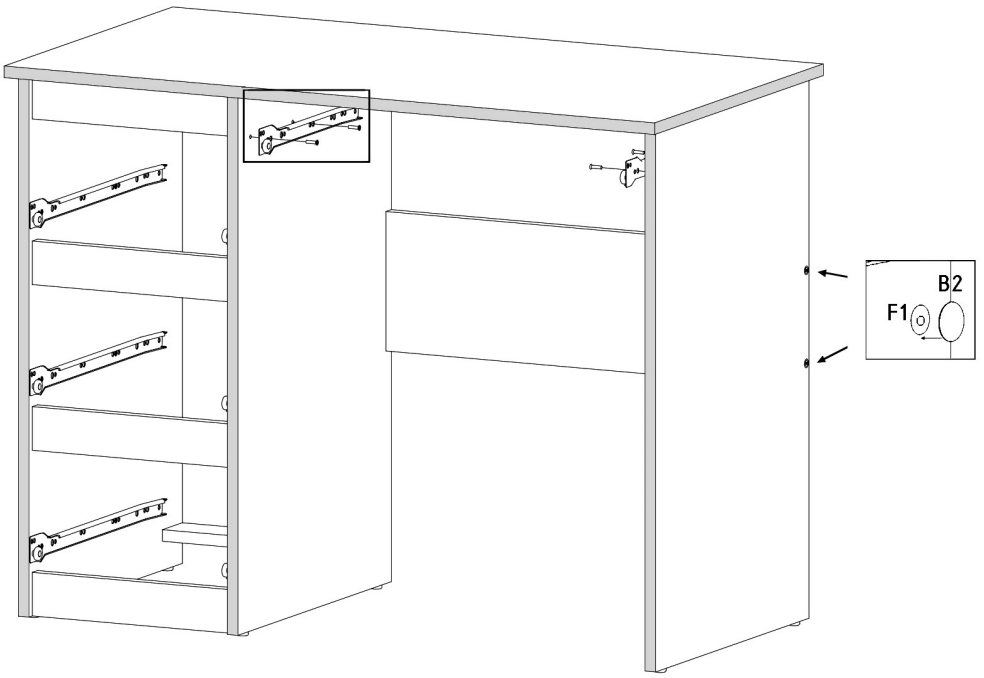
B2
F1

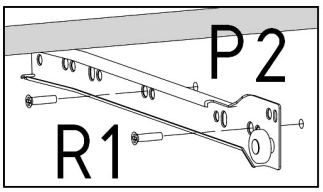
P2
R1

F1	F3	M1
	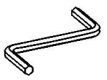	
7x50mm x6	Hex 4mm	12x15mm x6

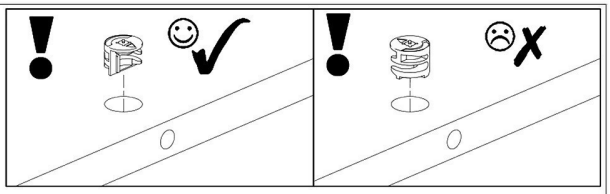

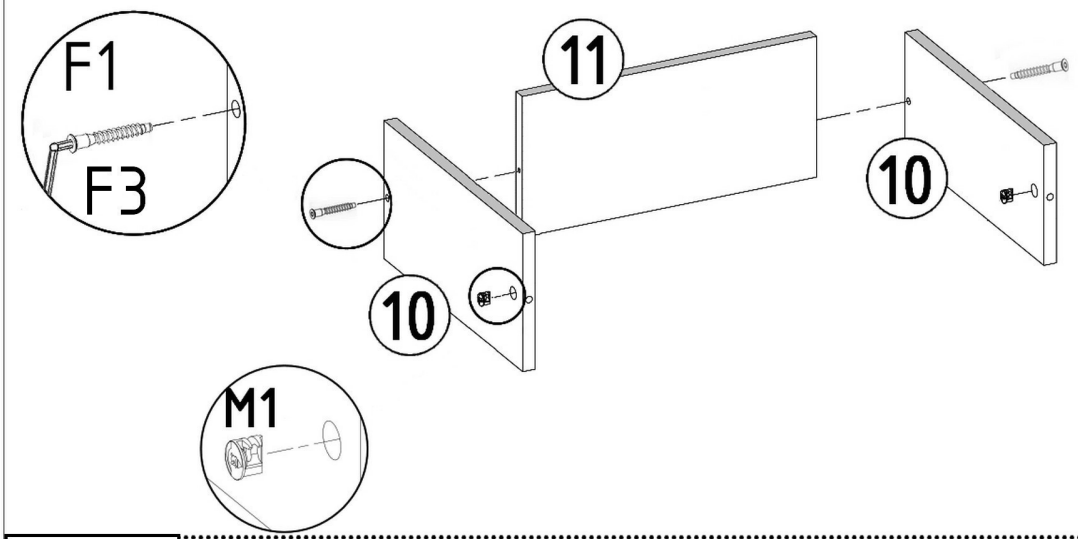

x3

N1

L=35mm x6

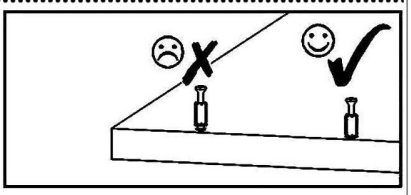

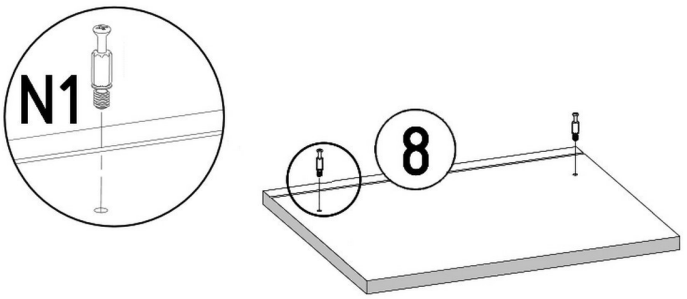

x3

B1

ø17/4mm x6

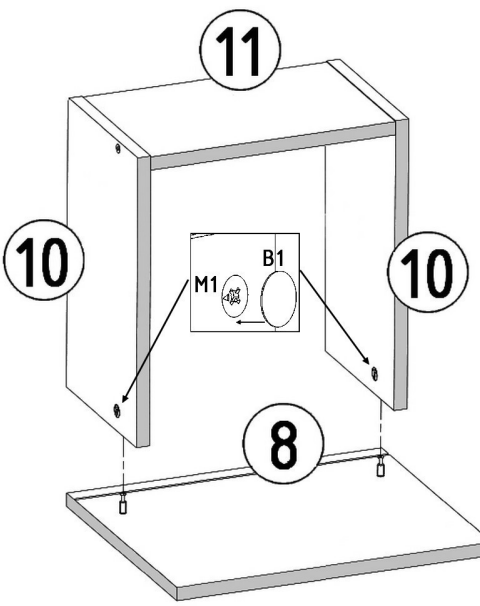

1.

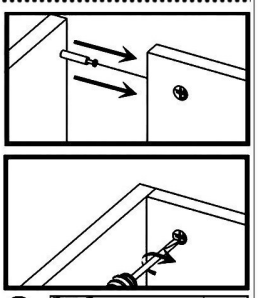

2.

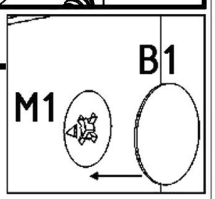

x3

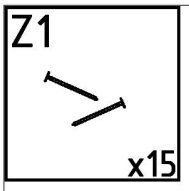

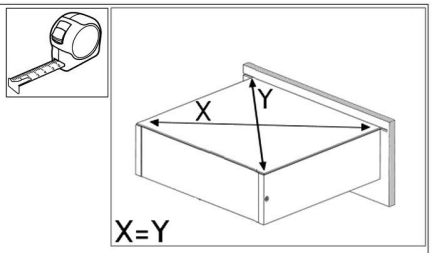

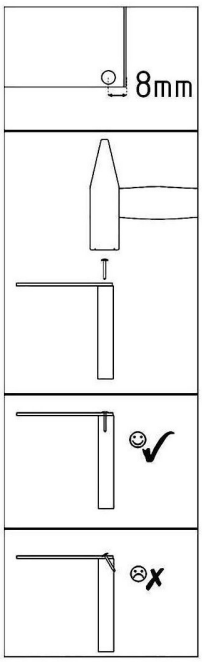

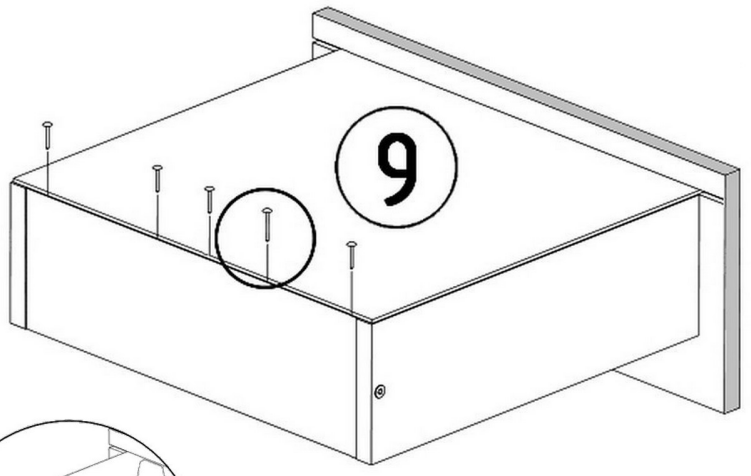

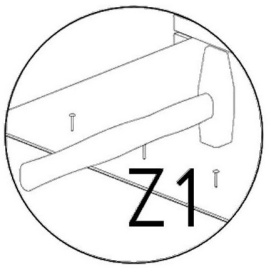

x3

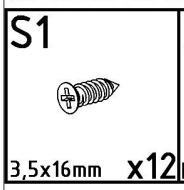

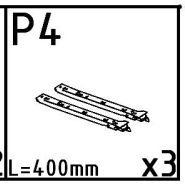

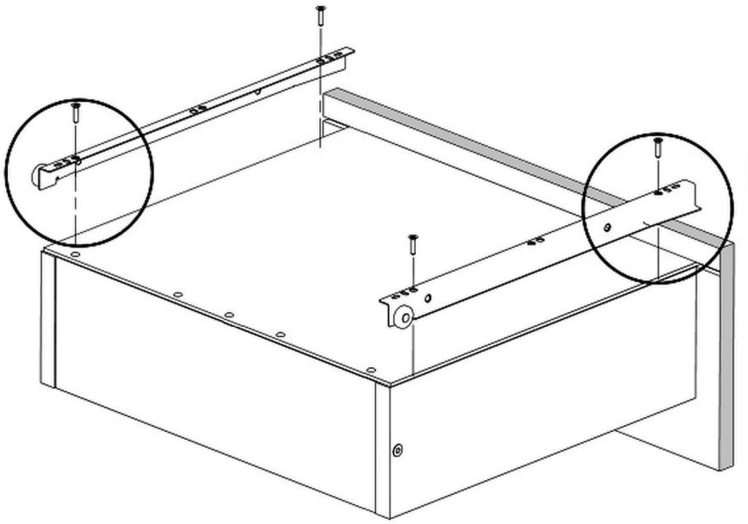

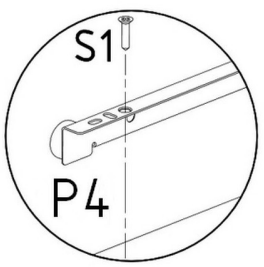

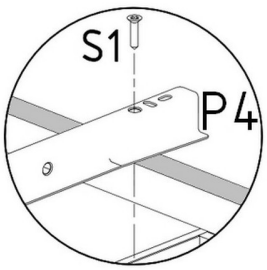

x3

F1 7x50mm x2

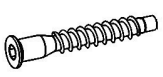

F3 Hex 4mm

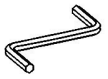

M1 12x15mm x2



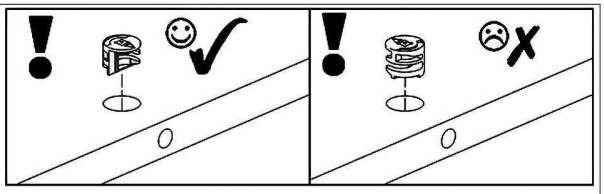

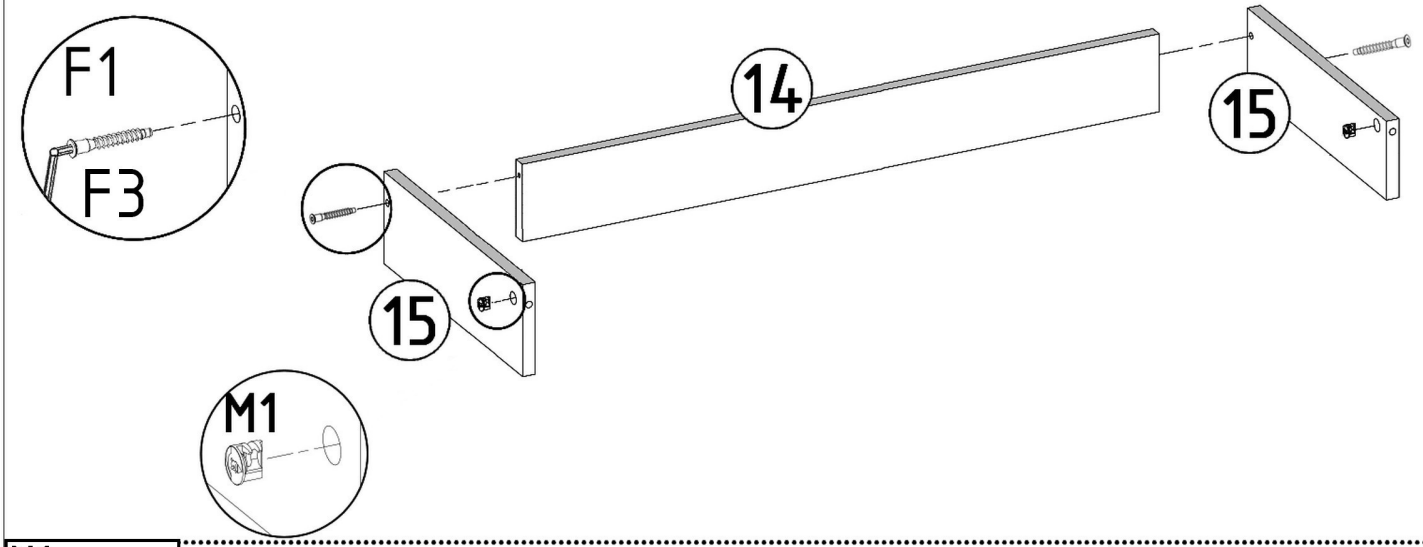

N1 L=35mm x2

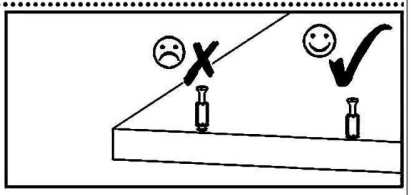

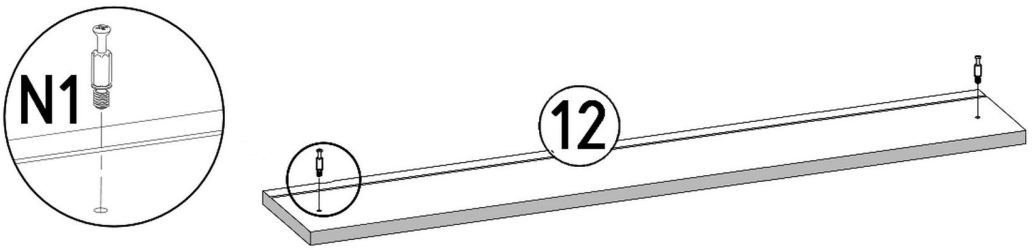

B1 ø17/4mm x2

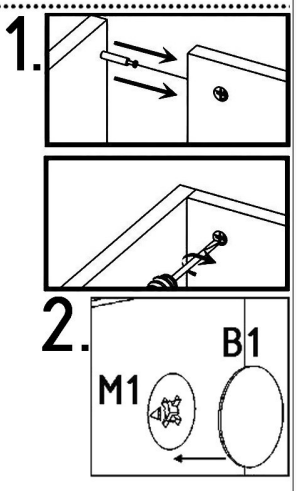

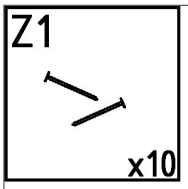
Z1
x10

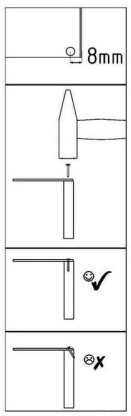
8mm

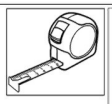

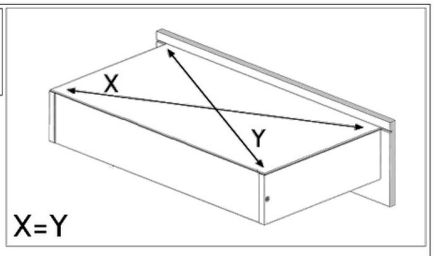
X
Y
X=Y

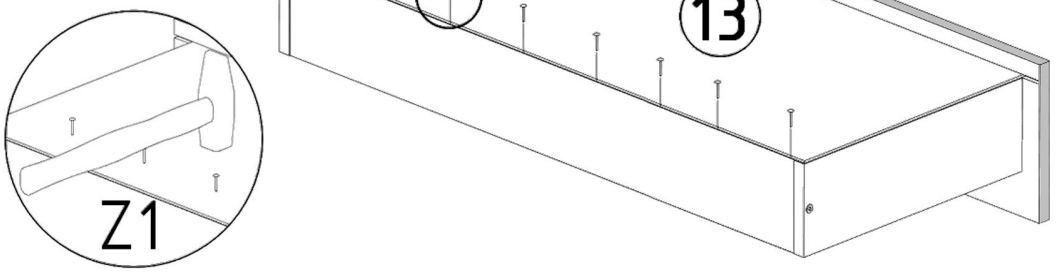
13
Z1

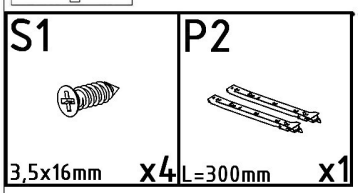
S1
3,5x16mm
x4
P2
L=300mm
x1

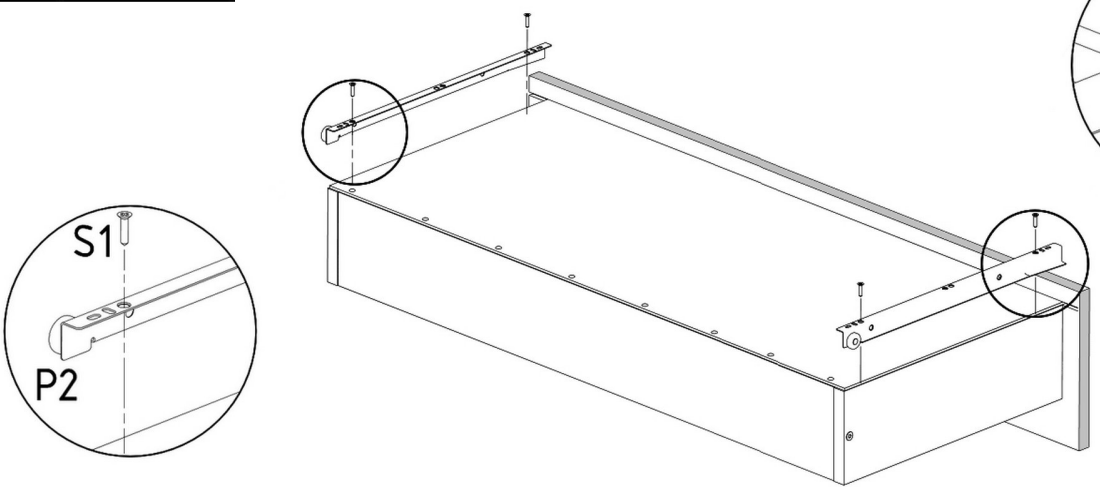
S1
P2
S1
P2

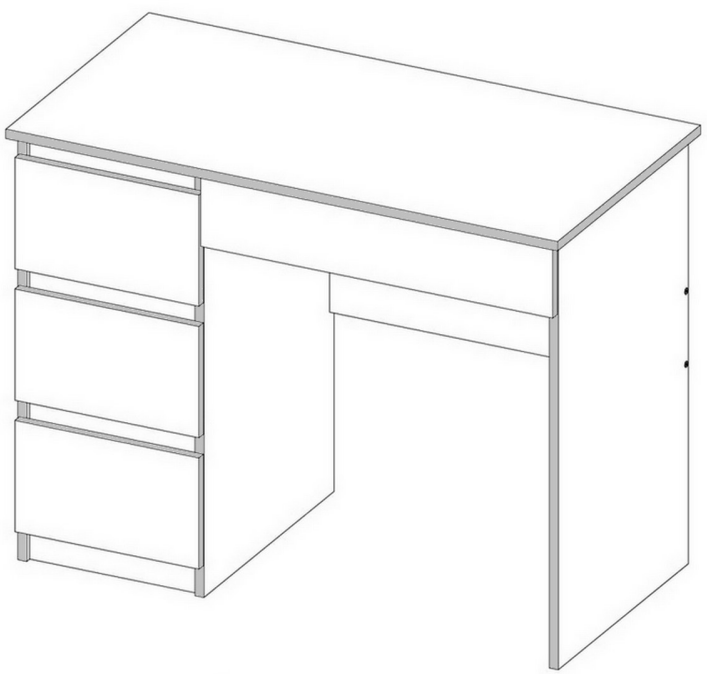

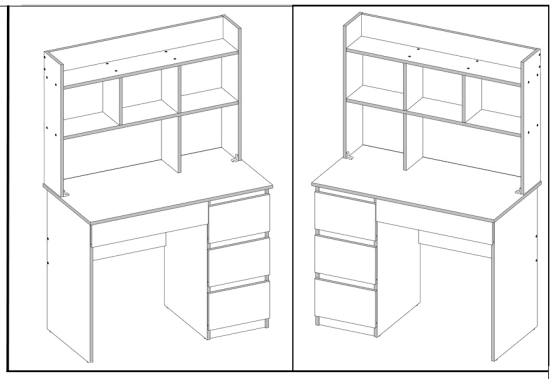

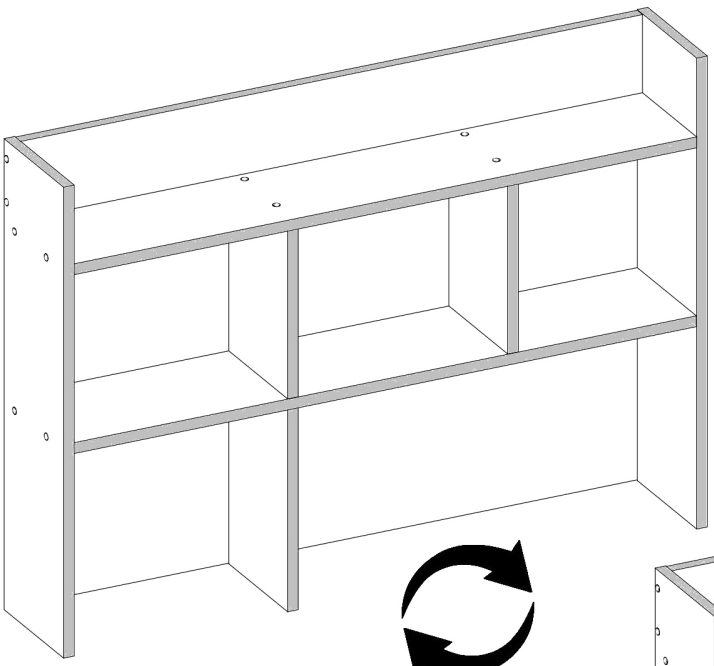

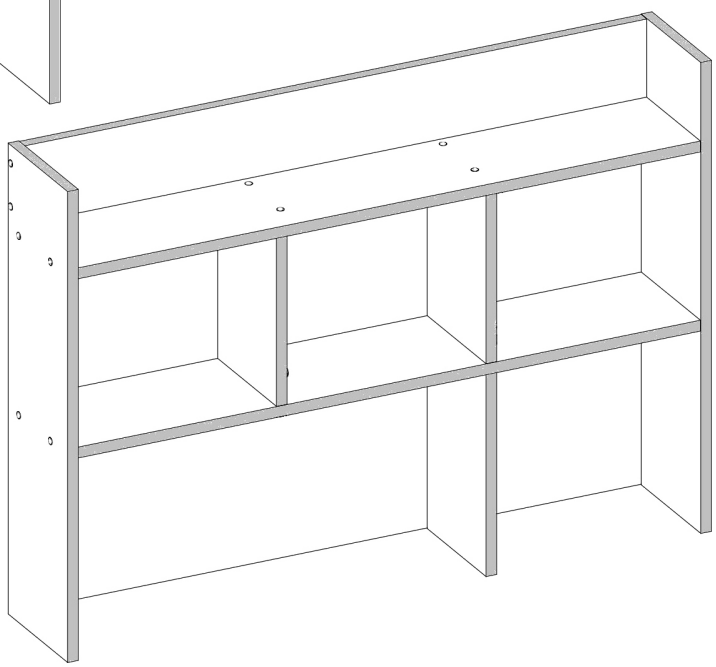

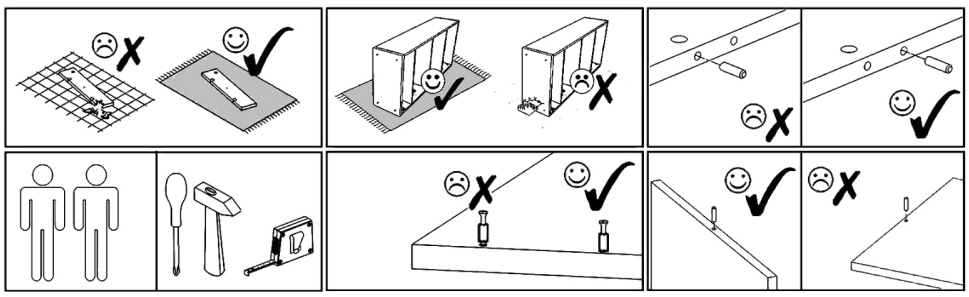

B1	B2	S1	V60	S9	B3		
ø17/4mm x6	ø12/4mm x16	3,5x16mm x4	8,5X10,5mm x2	4x16mm x6	ø7-8/5mm x2		
M1	N1	F1	F3	N4	Z1	V15	V61
12x15mm x6	L=35mm x2	7x50mm x16	Hex 4mm x1	L=62mm x2	x40	x6	x2

IM250324

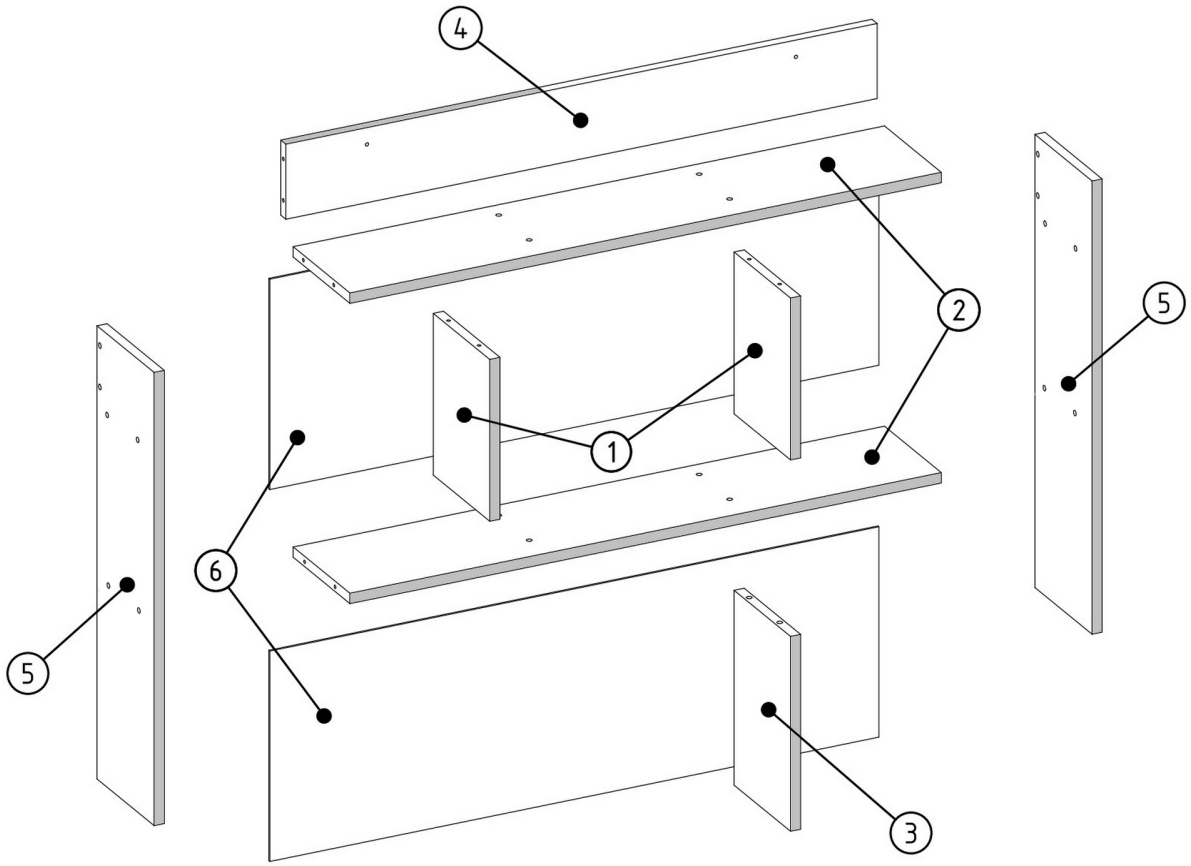

001581	6	2
001582	5	2
001583	4	1
001584	3	1
001585	2	2
001586	1	2
ID	NUMBER	QUANTITY

M1

12x15mm x4

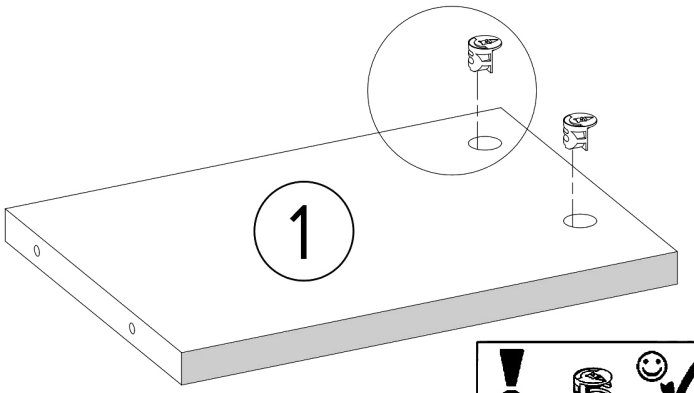

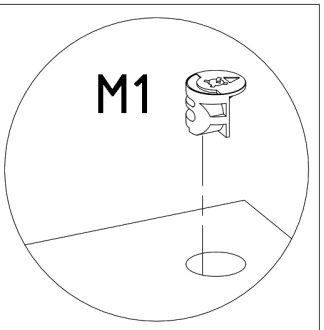

x2

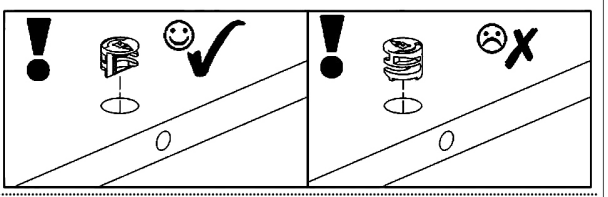

N1

L=35mm x2

V60

8,5X10,5mm x2

! R

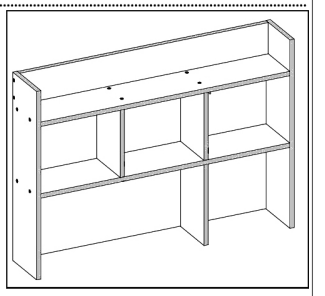

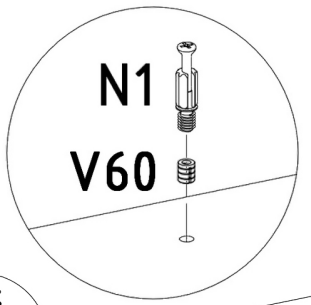

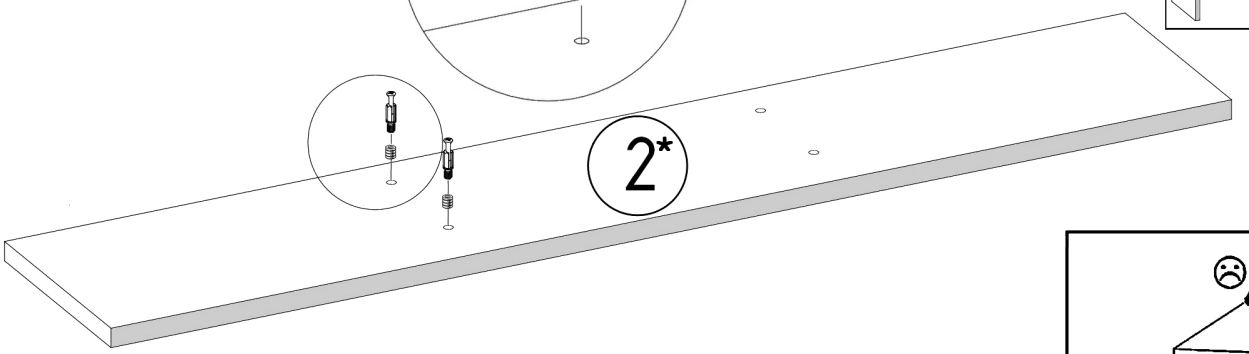

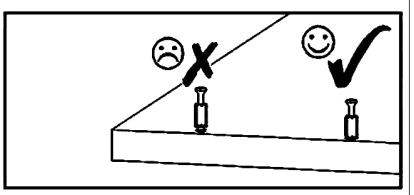

N1

L=35mm x2

V60

8,5X10,5mm x2

! L

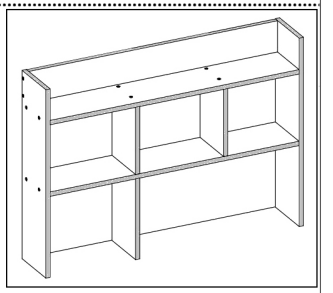

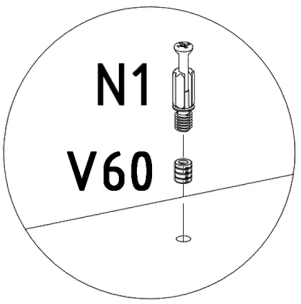

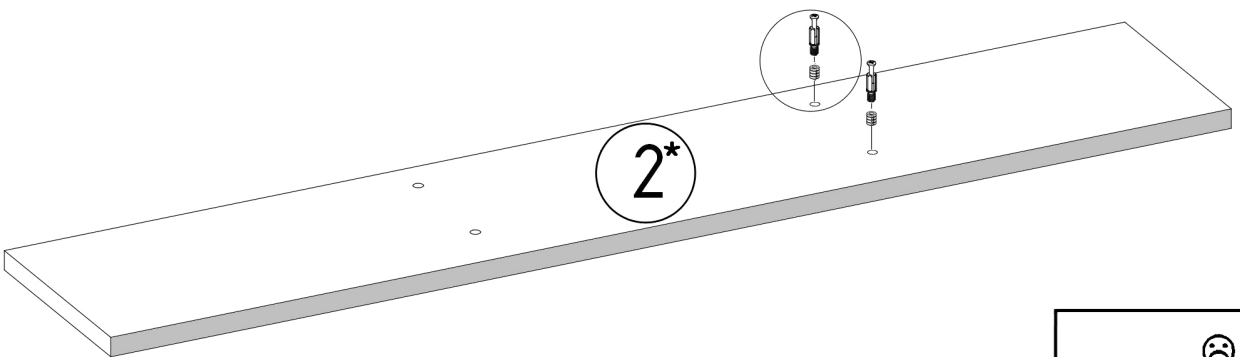

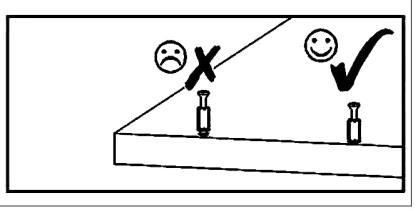

M1



12x15mm x2

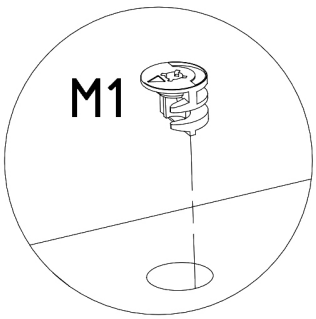

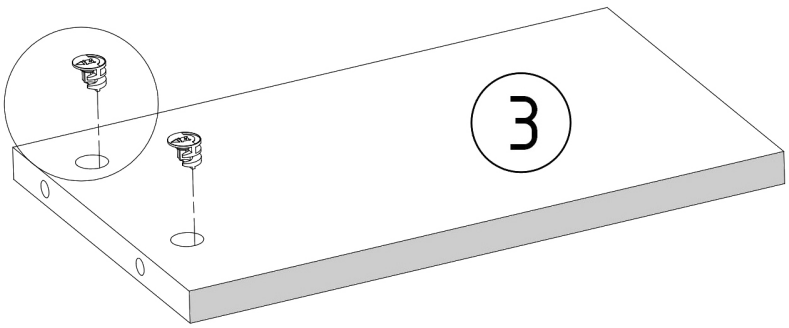

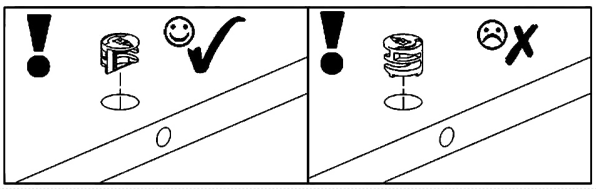

F1

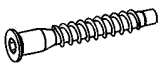

7x50mm x4

F3

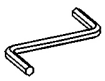

Hex 4mm

N4



L=62mm x2

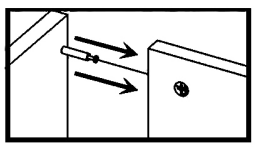

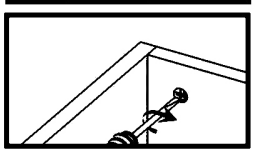

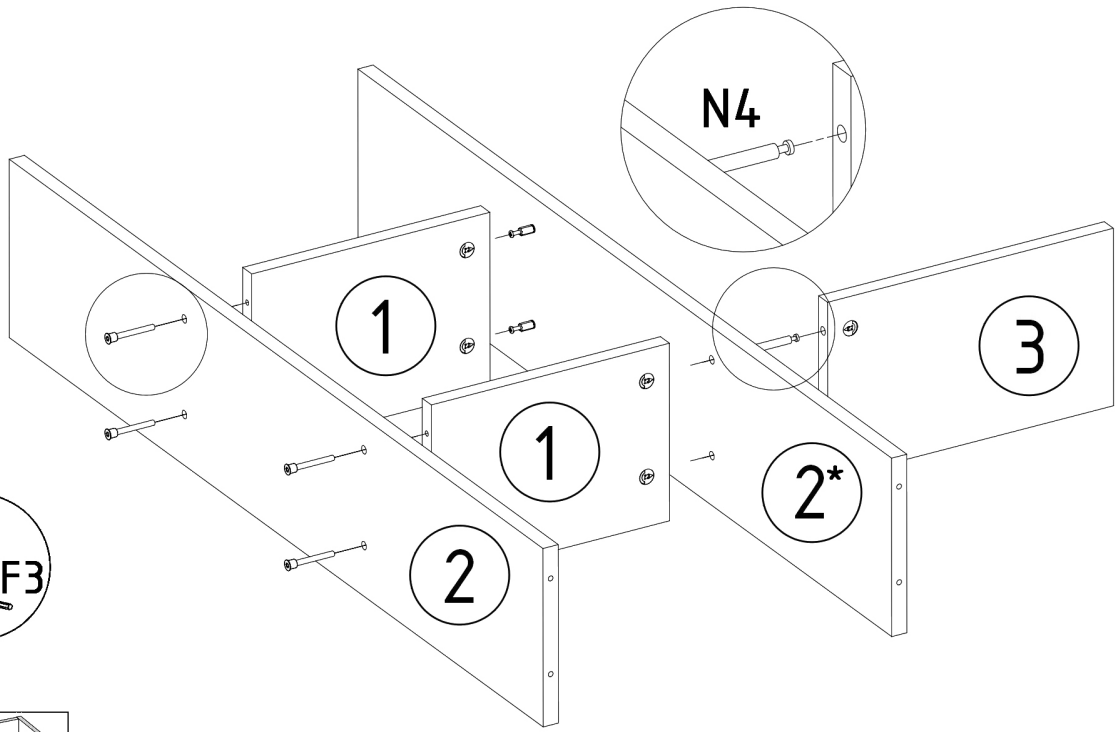



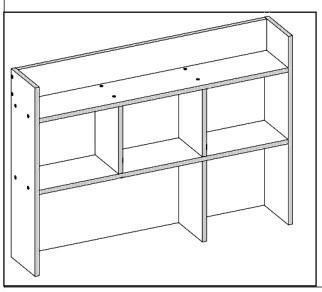

F1	F3	N4
7x50mm x4	Hex 4mm	L=62mm x2

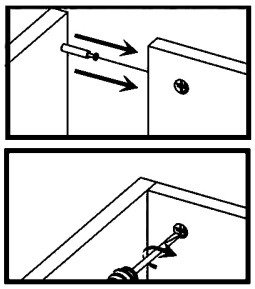

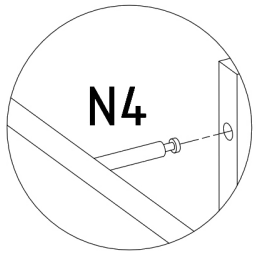

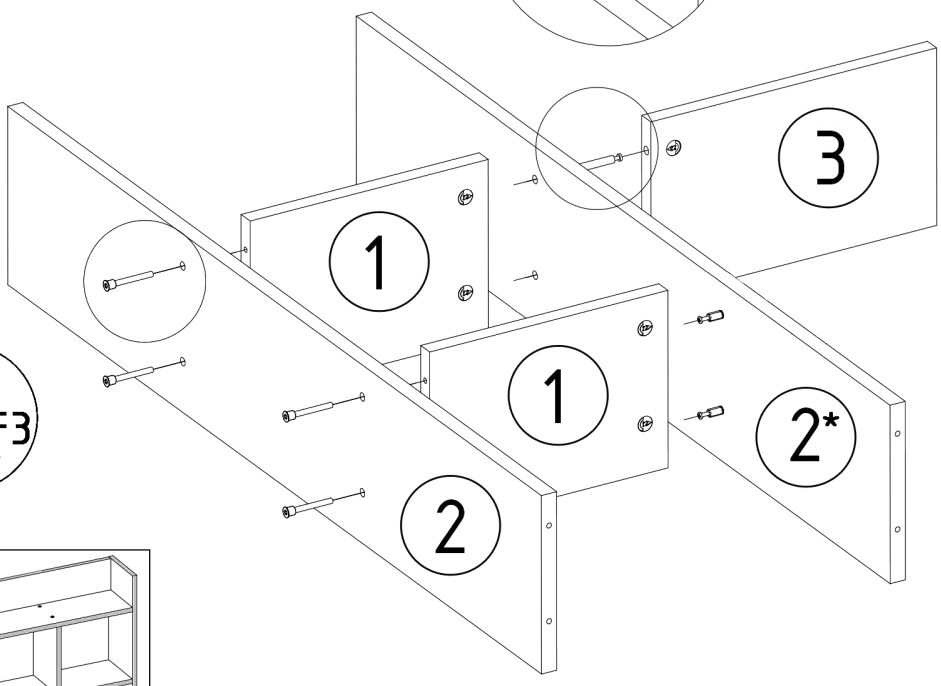

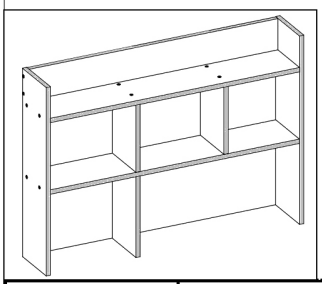

F1	F3
7x50mm x12	Hex 4mm

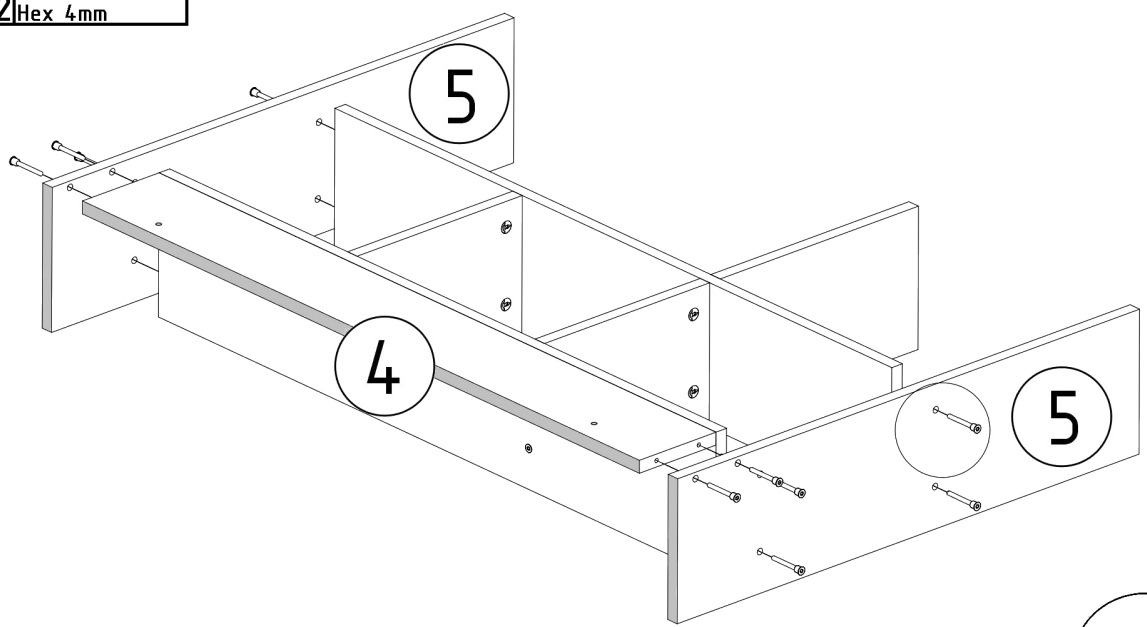

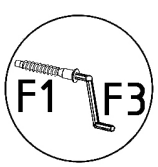

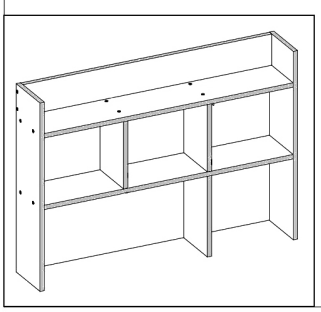

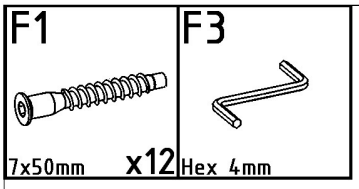
F1
7x50mm
x12
F3
Hex 4mm

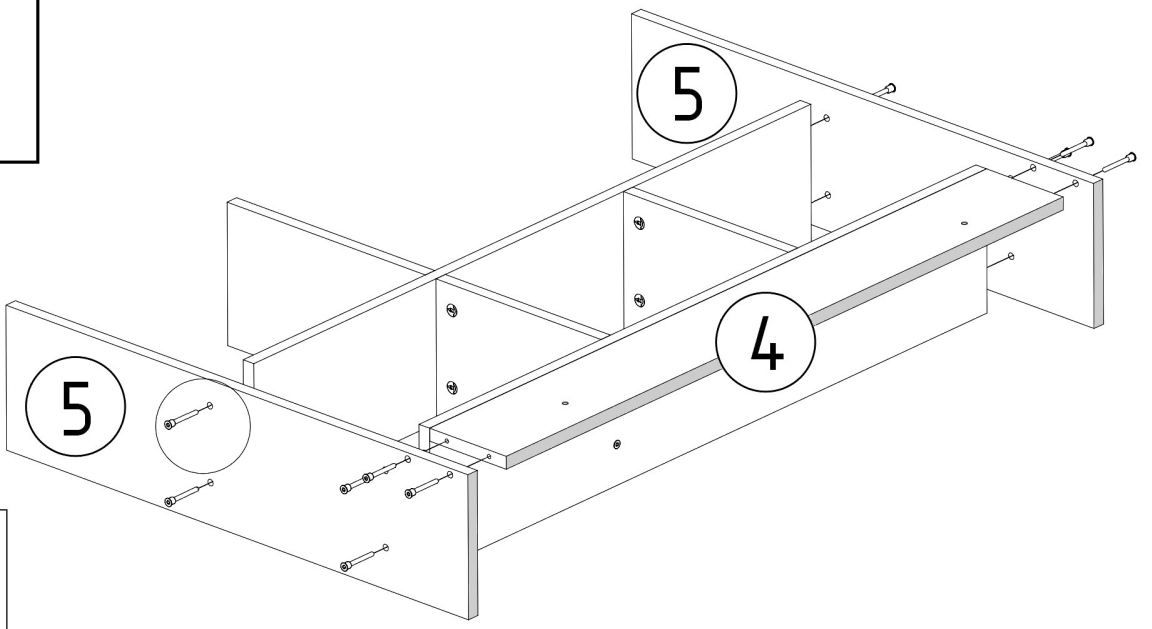
5
4
5

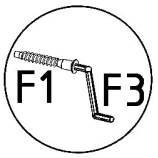
F1
F3

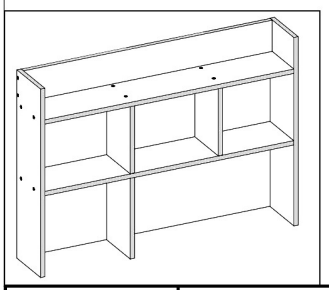

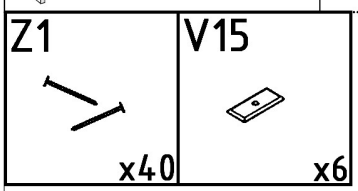
Z1
x40
V15
x6

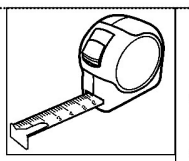

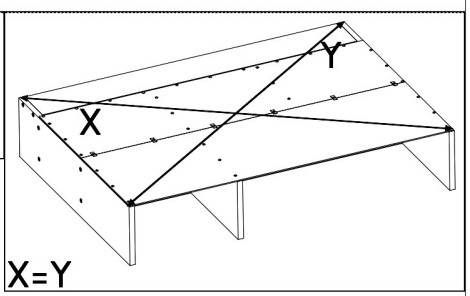
X
Y
X=Y

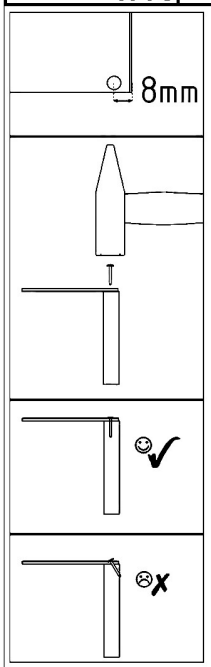
8mm

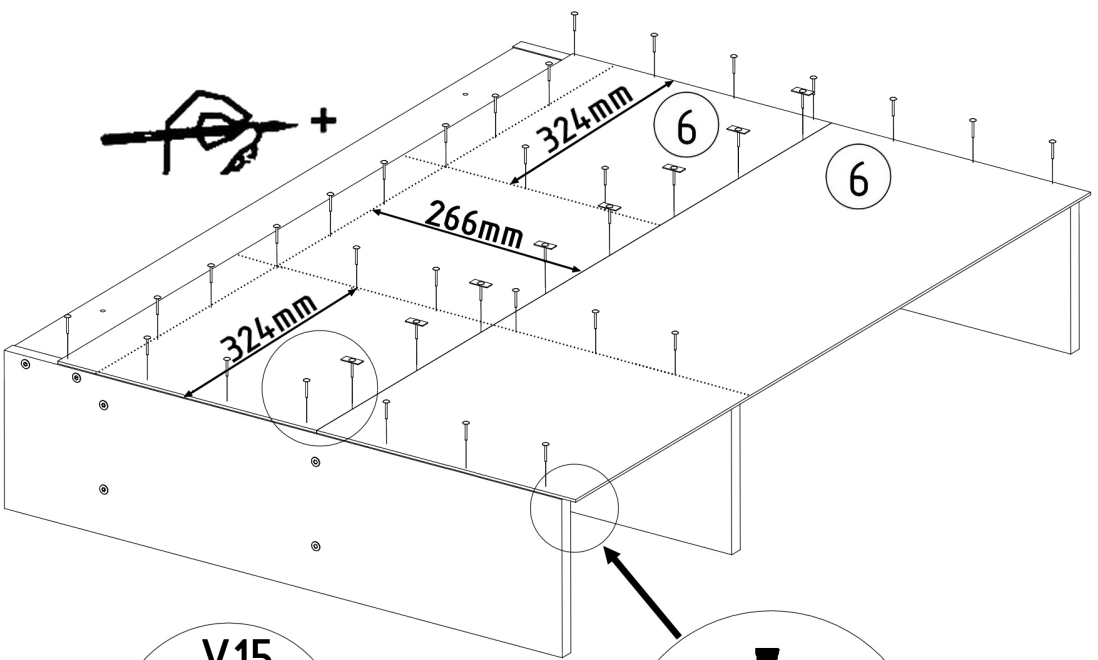
+
324mm
6
6
266mm
324mm

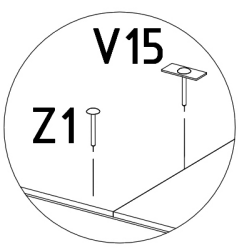
V15
Z1

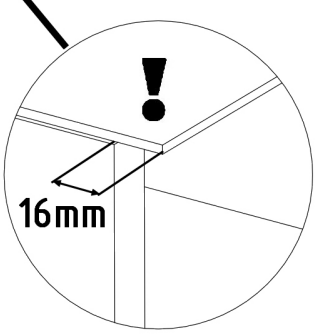
!
16mm

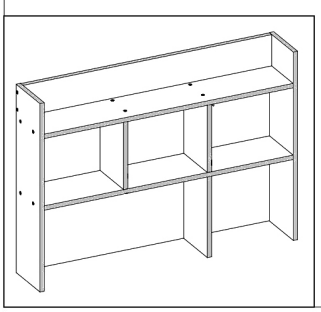

S9

4x16mm x6

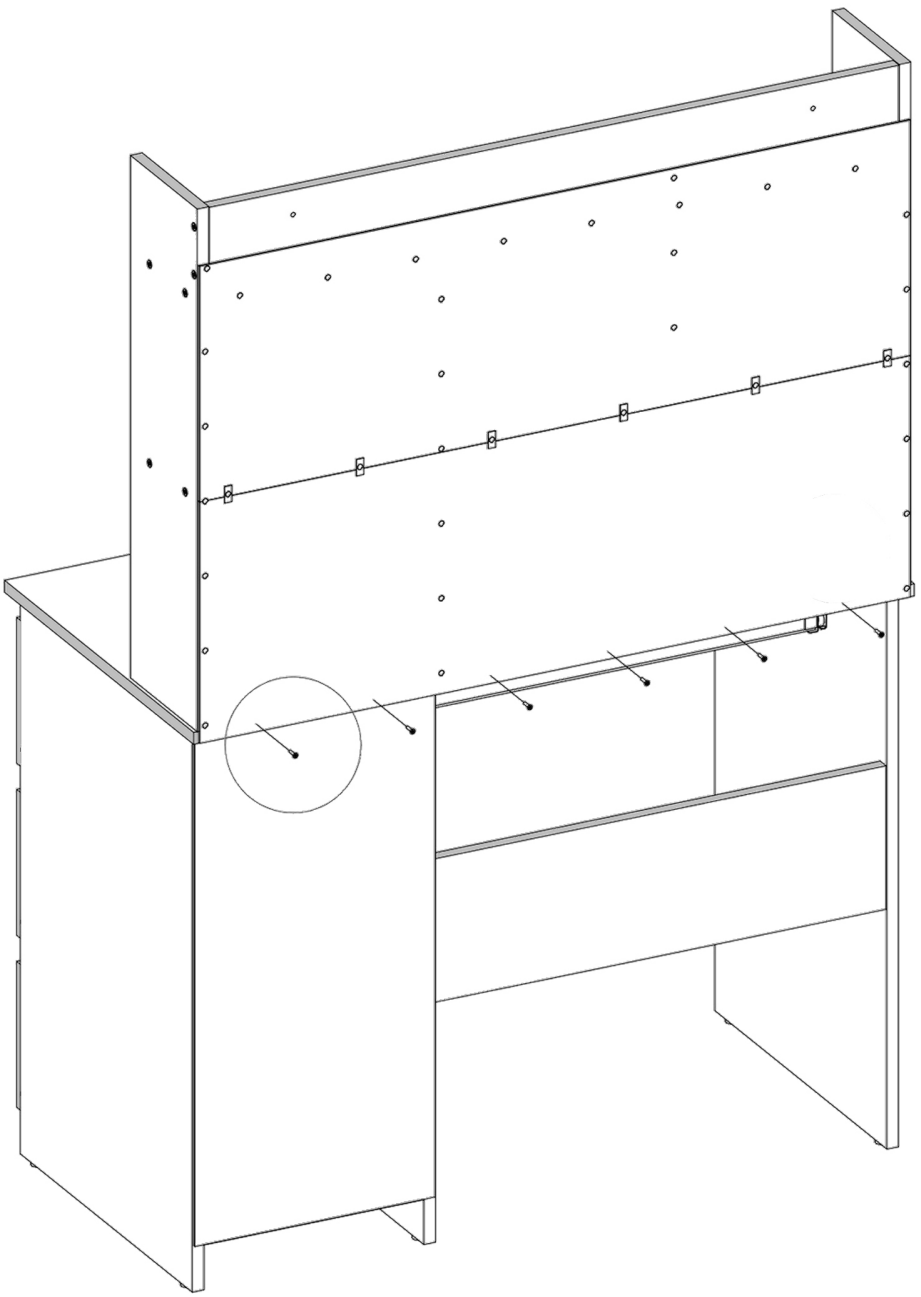

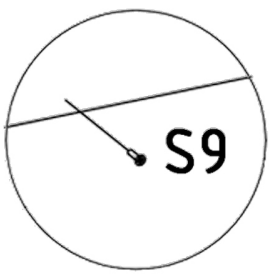

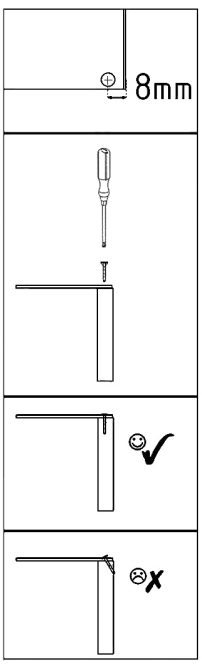

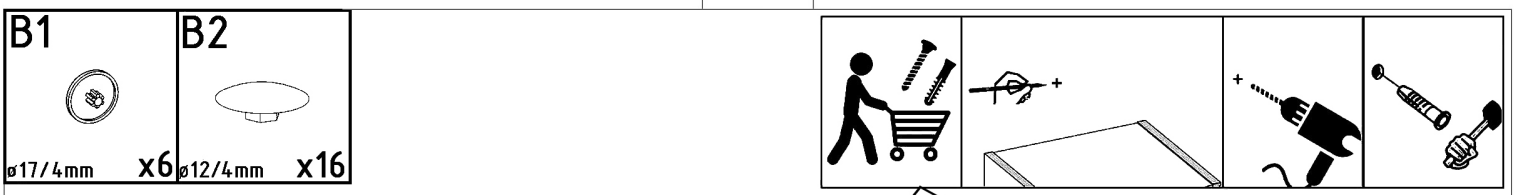
B1
ø17/4mm x6
B2
ø12/4mm x16

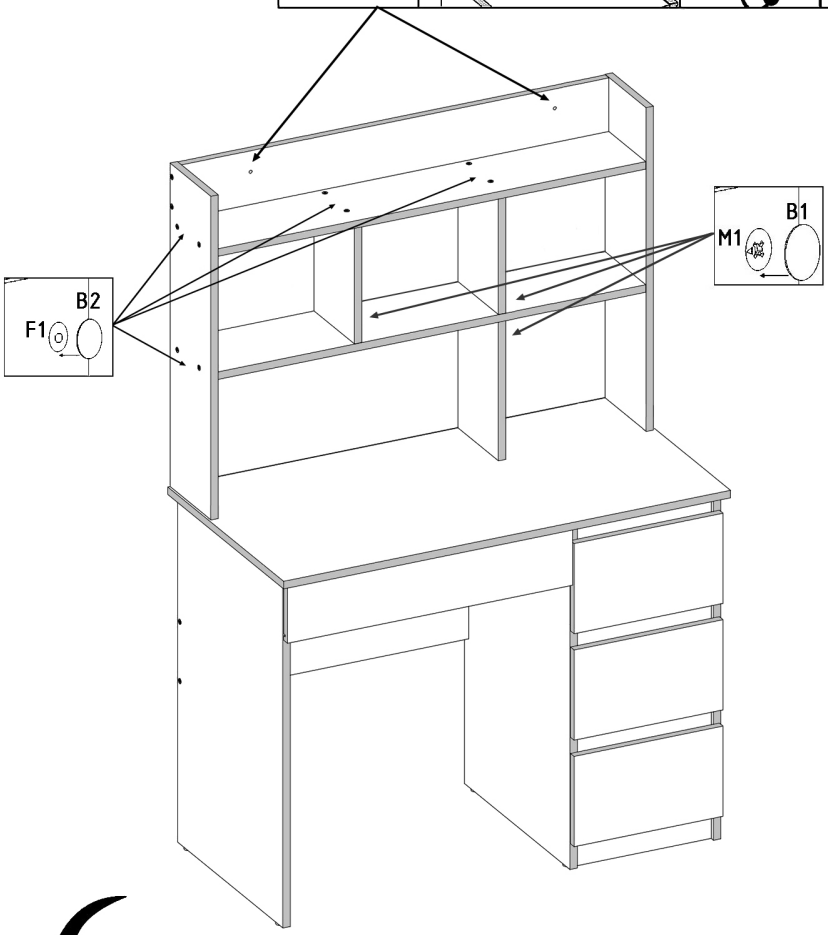
B2
F1
B1
M1

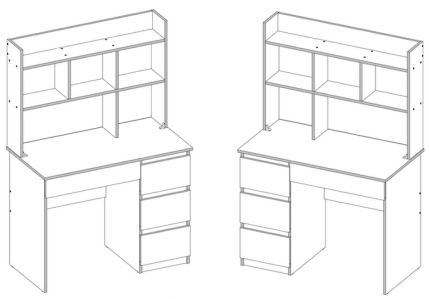

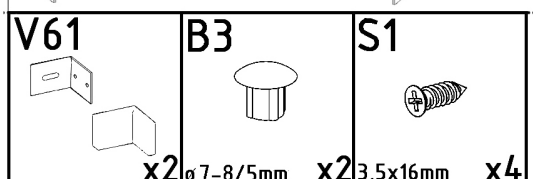
V61
x2
B3
ø7-8/5mm x2
S1
3,5x16mm x4
B1
ø17/4mm x6
B2
ø12/4mm x16

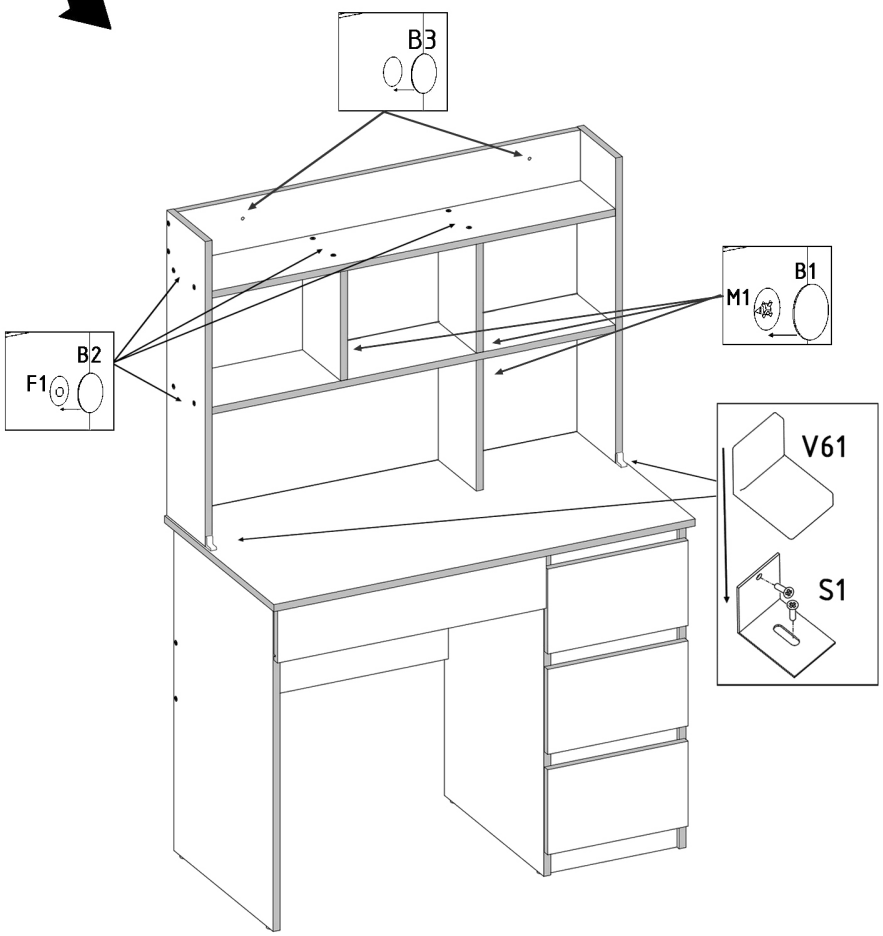
B3
B2
F1
B1
M1
V61
S1

