INSTRUKCJA MONTAŻU

# Regał na książki 40 cm, 182 cm

Kolor: Czarny

Kod produktu: OR10423

R_40

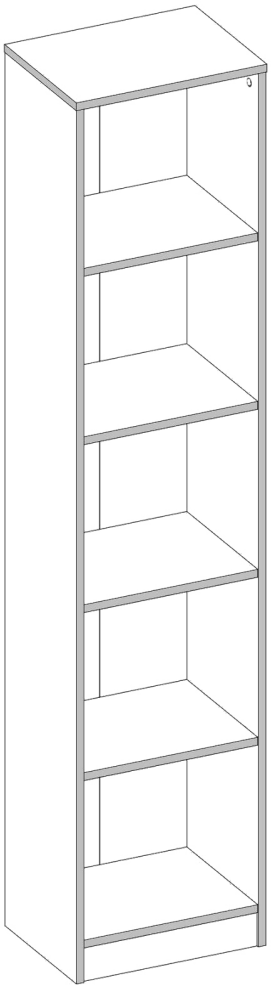

R_60

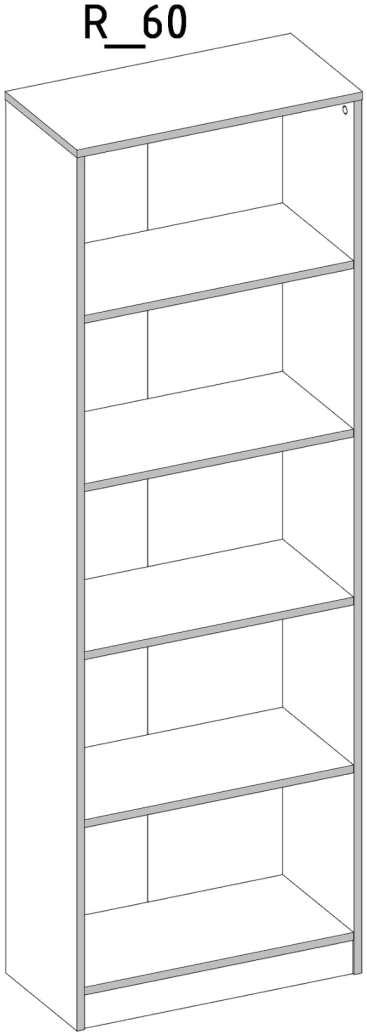

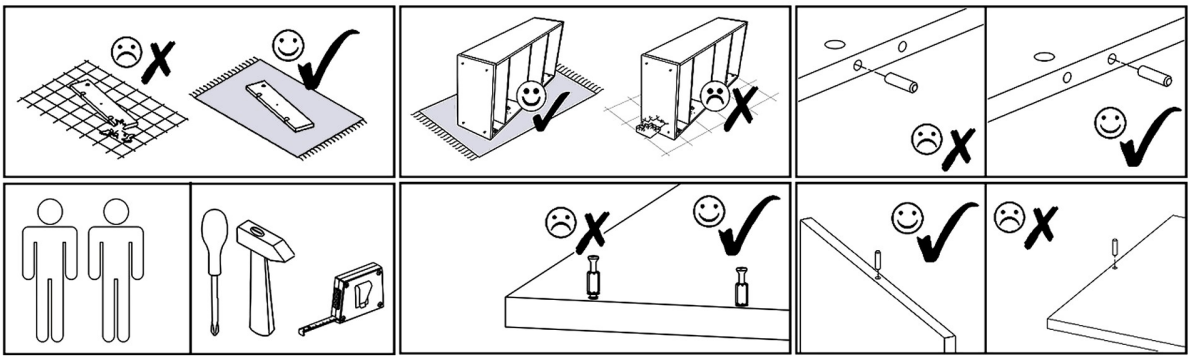

| | | | | | | | | |
|---|---|---|---|---|---|---|---|---|
| B1<br>B<br>ø17/4mm x4 | B1<br>S/A<br>ø17/4mm x4 | B1<br>CZ<br>ø17/4mm x4 | B1<br>Ant<br>ø17/4mm x4 | B1<br>K<br>ø17/4mm x4 | | | | |
| M1<br>12x15mm x12 | N1<br>L=35mm x12 | E1<br>8x30mm x16 | Z1<br>x50 | V16<br>5x16mm x12 | T1<br>x4 | V32<br>L=1712mm x1 | V13<br>x1 | |

IM250507

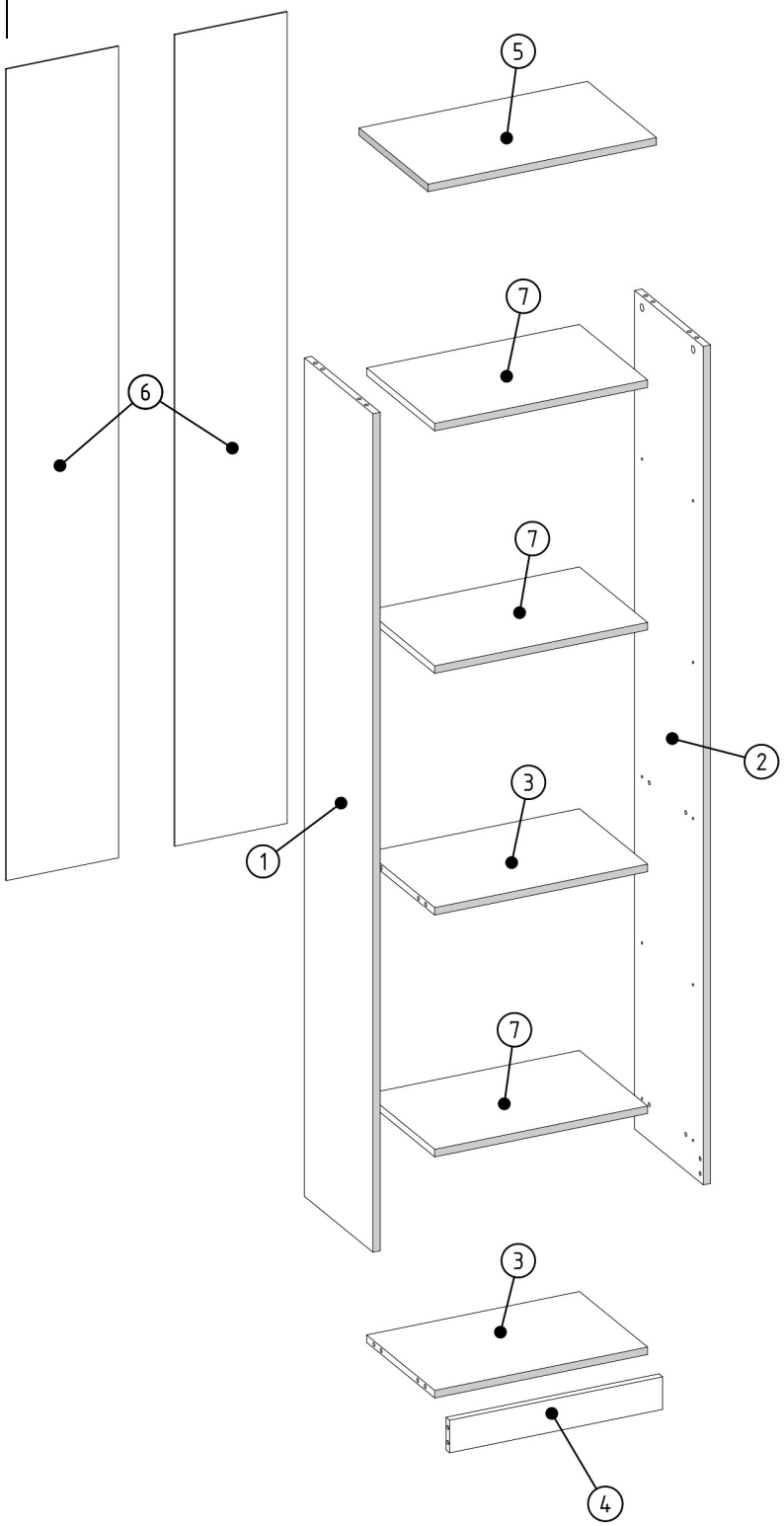


## R40

| ID | NUMBER | QUANTITY |
|---|---|---|
| 000510 | 7 | 3 |
| 000509 | 6 | 2 |
| 001742 | 5 | 1 |
| 001744 | 4 | 1 |
| 001743 | 3 | 2 |
| 000513 | 2 | 1 |
| 000512 | 1 | 1 |

## R60

| ID | NUMBER | QUANTITY |
|---|---|---|
| 000522 | 7 | 3 |
| 000521 | 6 | 2 |
| 001745 | 5 | 1 |
| 001747 | 4 | 1 |
| 001746 | 3 | 2 |
| 000513 | 2 | 1 |
| 000512 | 1 | 1 |

| M1 | E1 | V16 | N1 | T1 |
|---|---|---|---|---|
| 12x15mm x4 | 8x30mm x4 | 5x16mm x12 | L=35mm x8 | x4 |

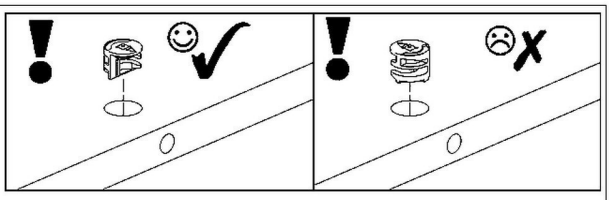

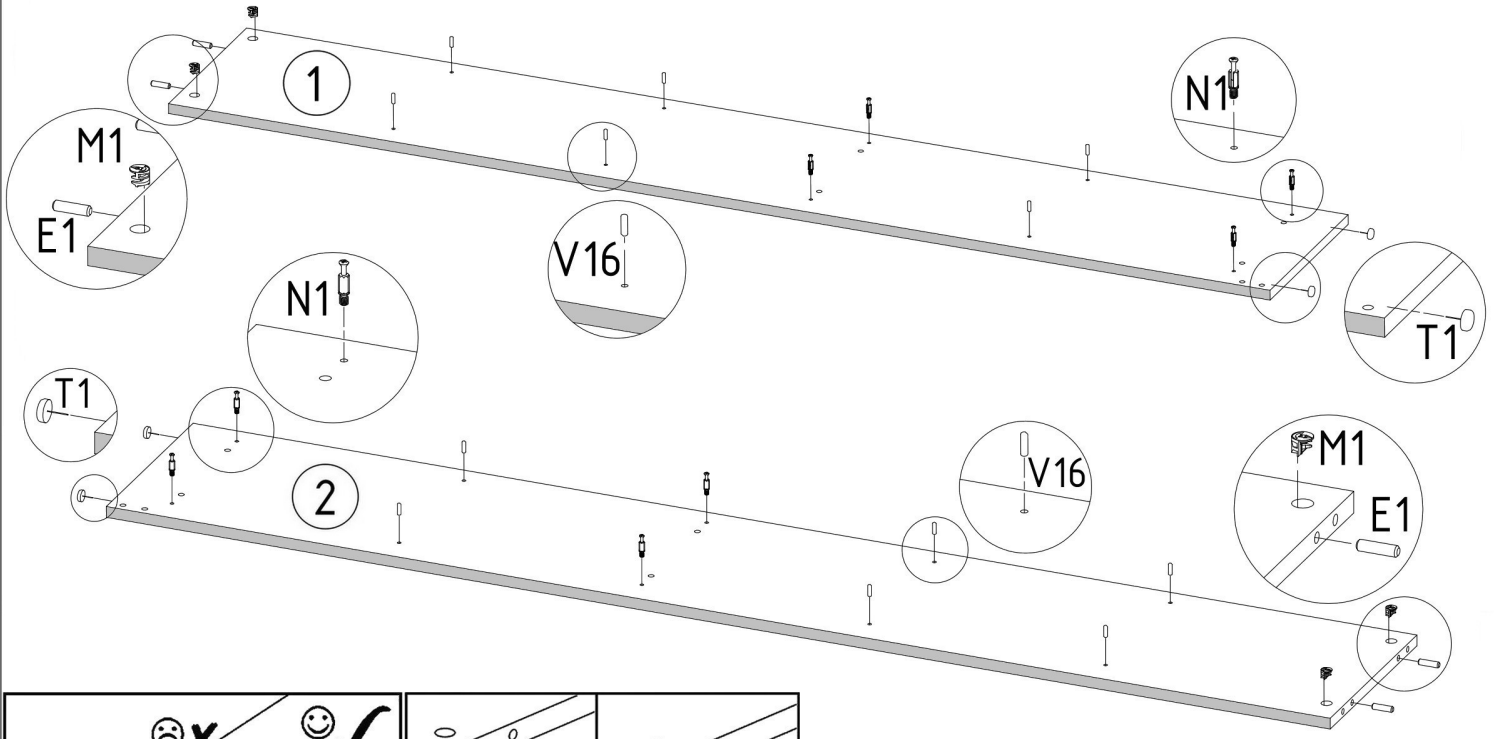


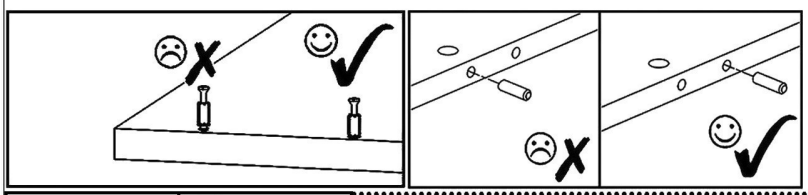

| M1 | E1 |
|---|---|
| 12x15mm x8 | 8x30mm x8 |

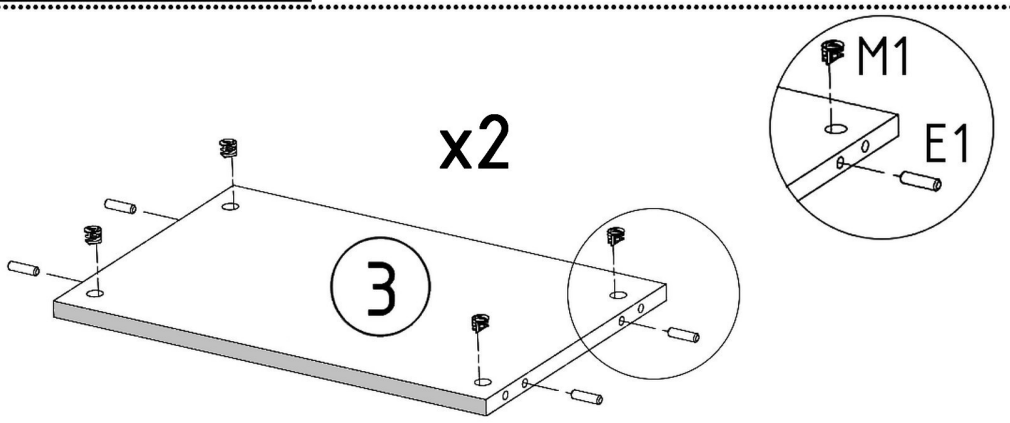


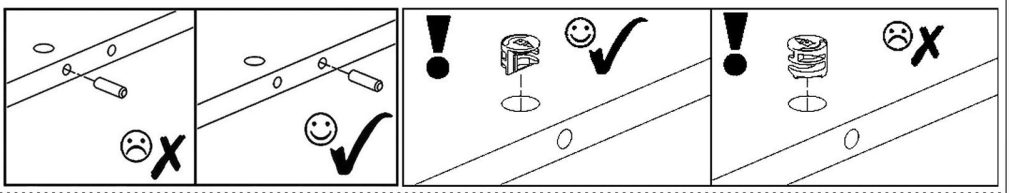

| E1 |
|---|
| 8x30mm x4 |

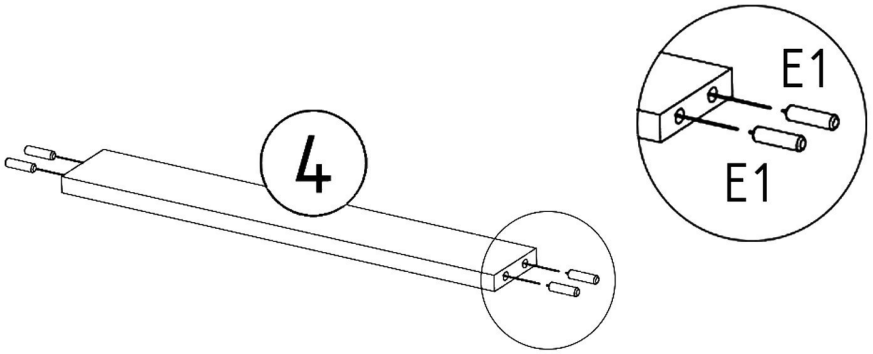

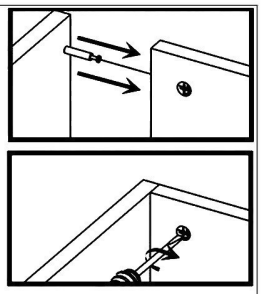

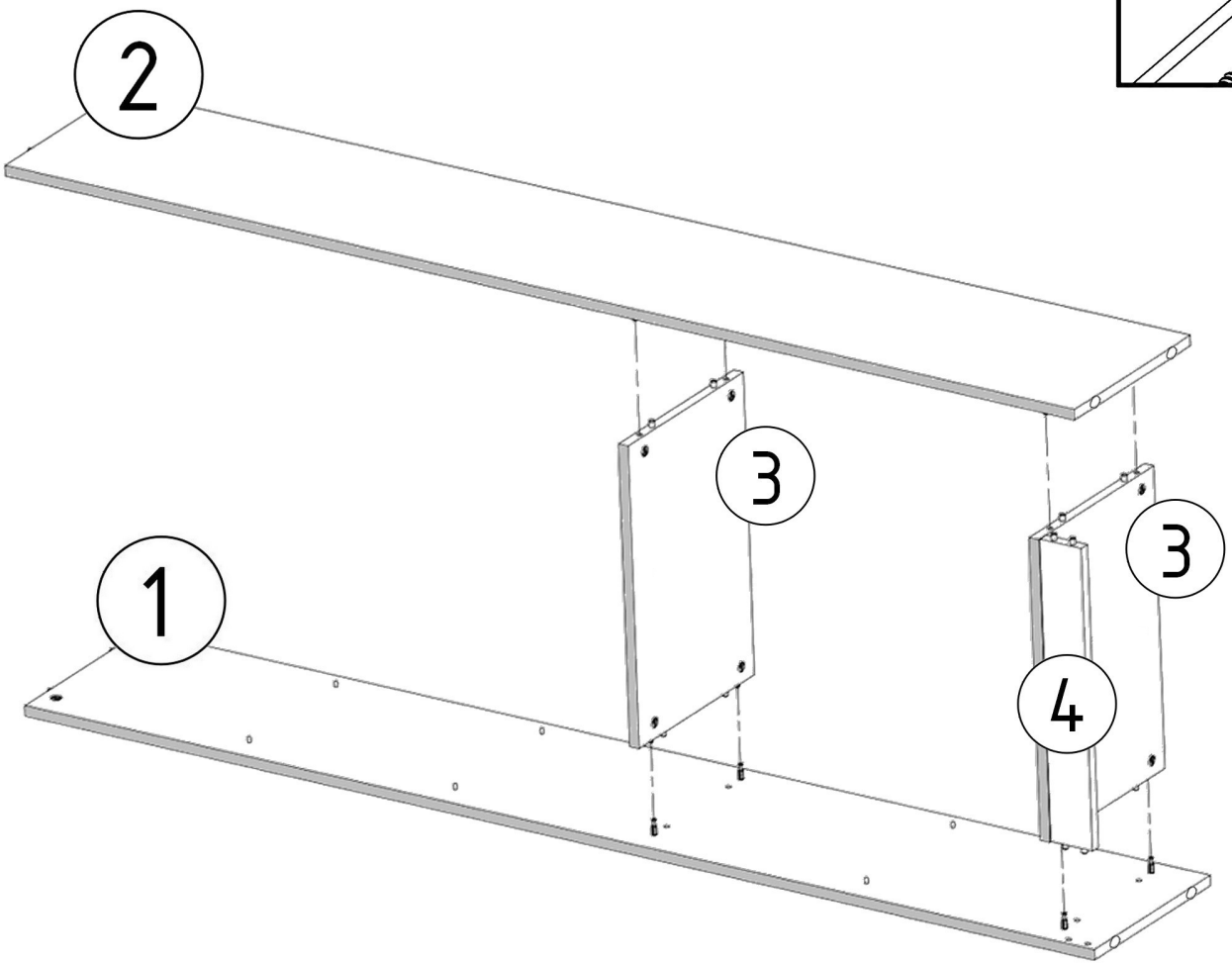
2
3
3
1
4

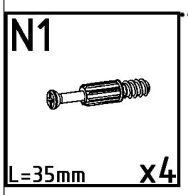
N1
L=35mm
x4

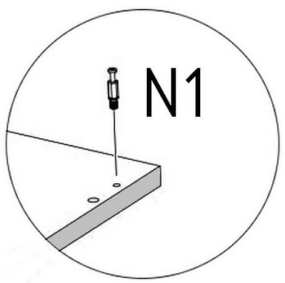
N1

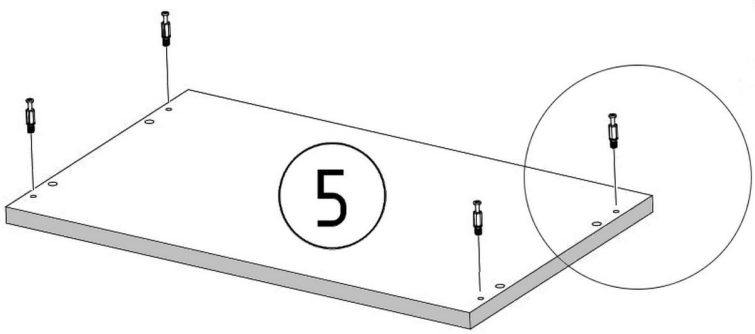
5

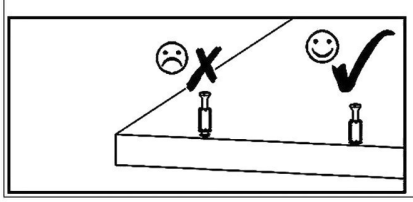

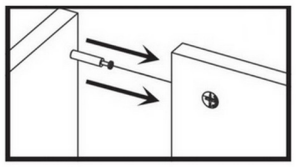

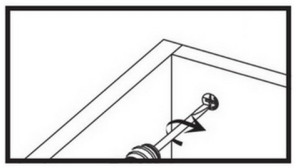

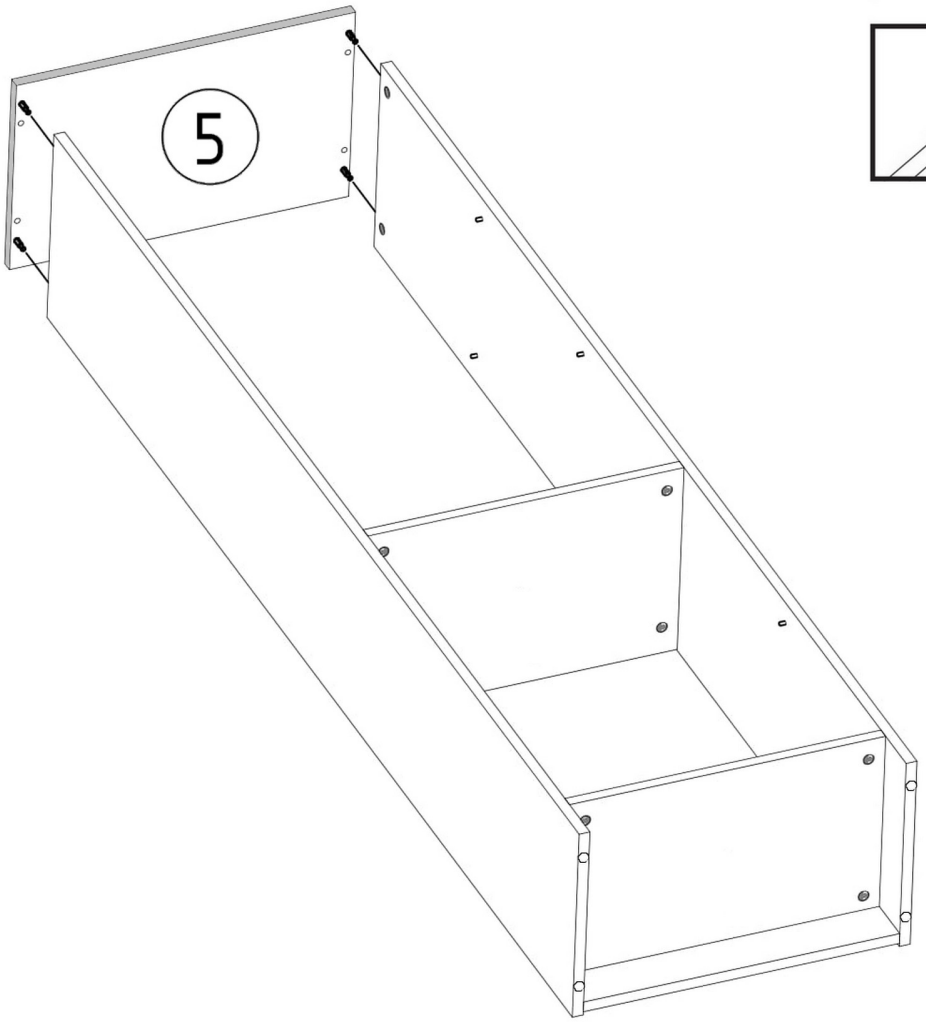
5

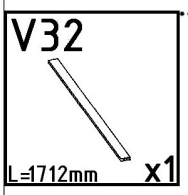
V32
L=1712mm
x1

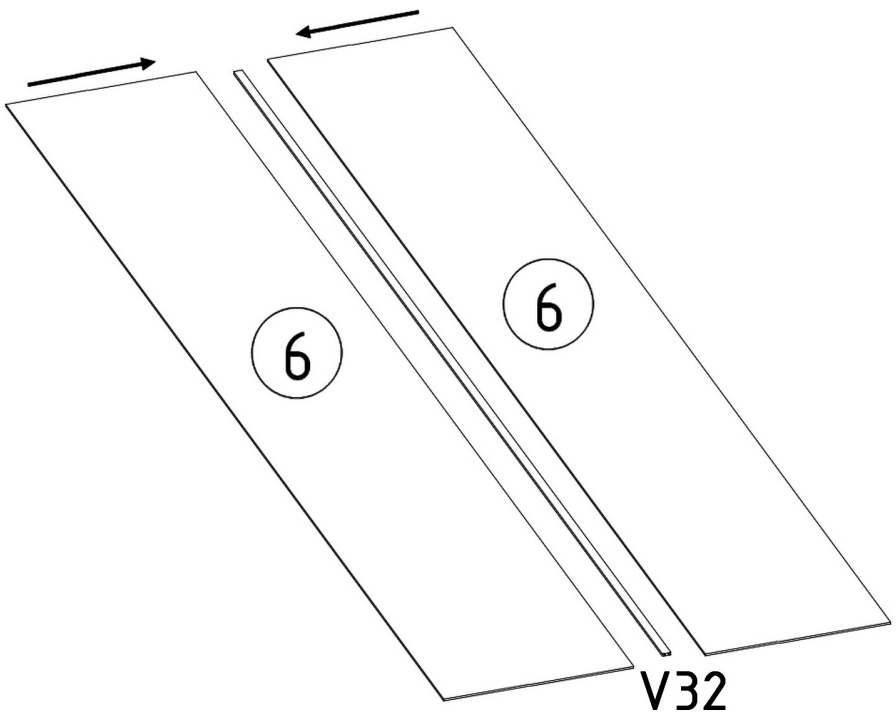
6
6
V32

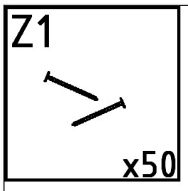
Z1
x50

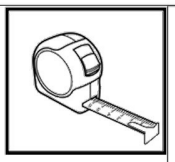

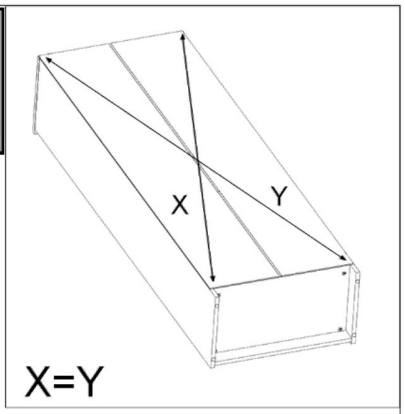
X
Y
X=Y

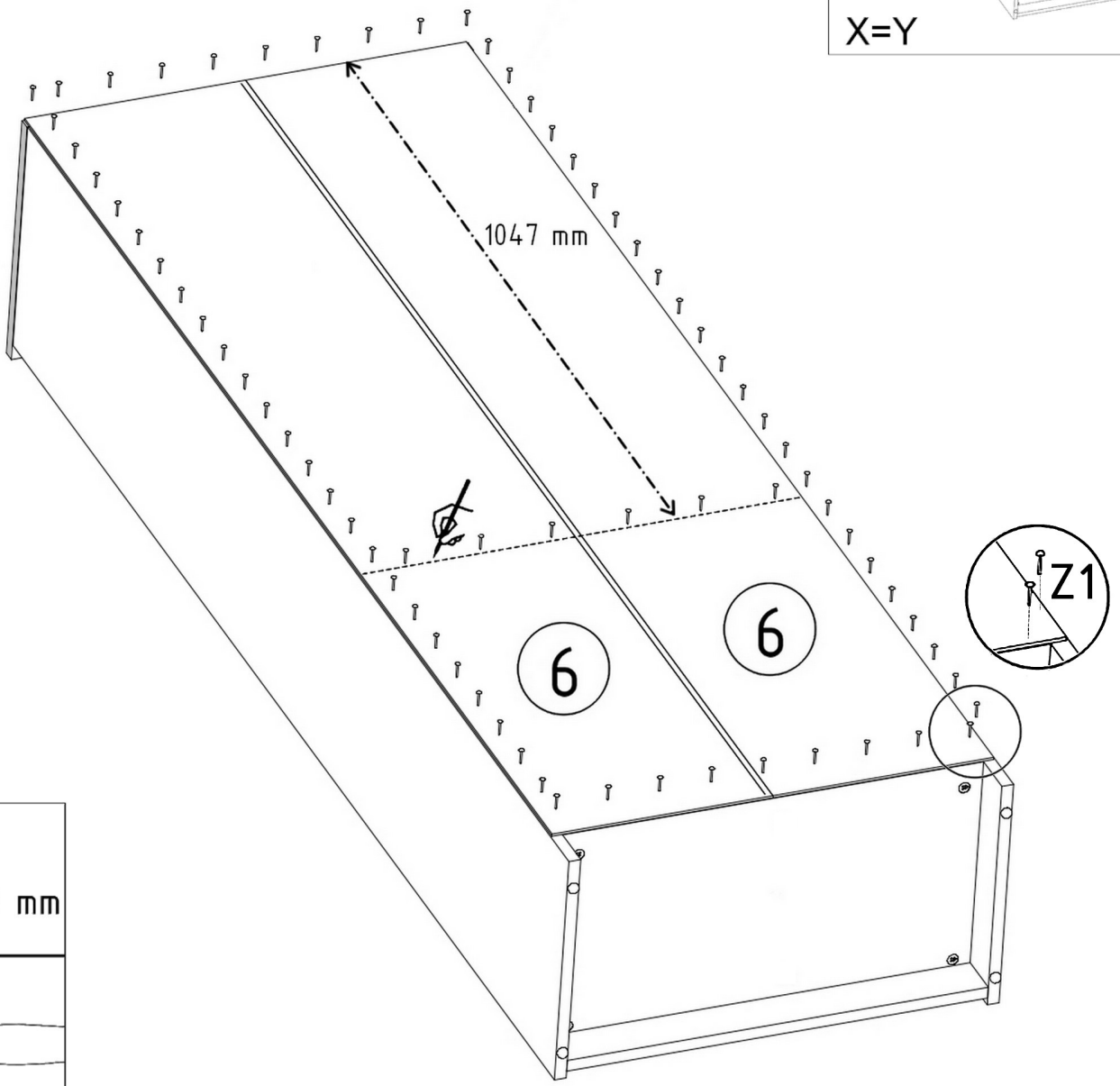
1047 mm
6
6
Z1

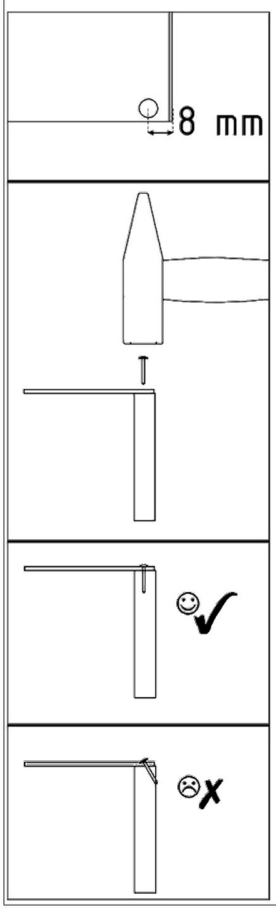
8 mm

| V13 | B1 |
| --- | --- |
|  |  |
| x1 | ø17/4mm x4 |

