INSTRUKCJA MONTAŻU

Komoda 80 cm na nóżkach z 2 drzwiczkami, szufladą i blatem z rantem

Kolor: Biały

Kod produktu: OR10209

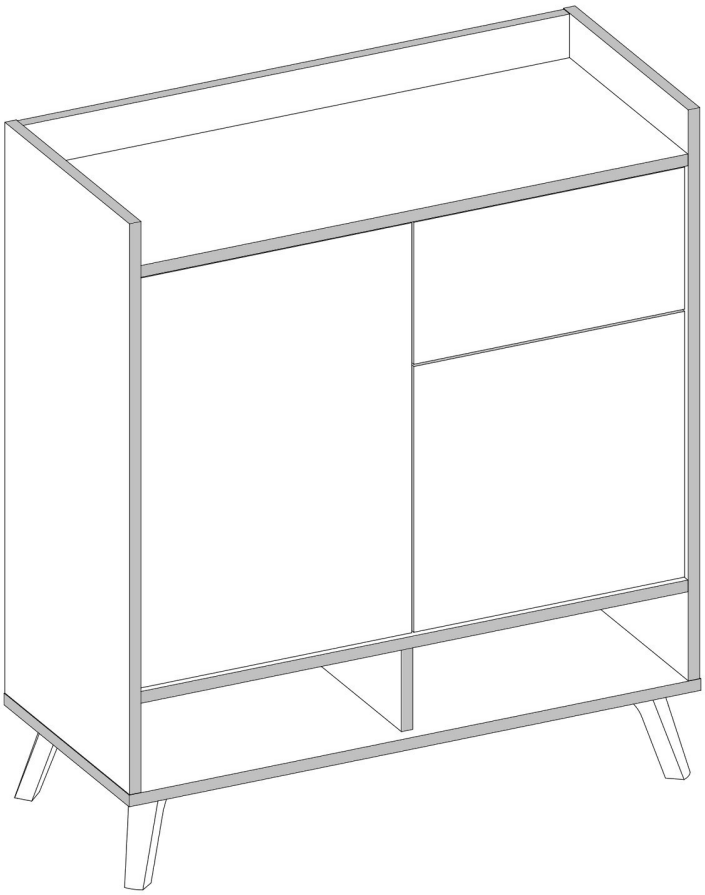

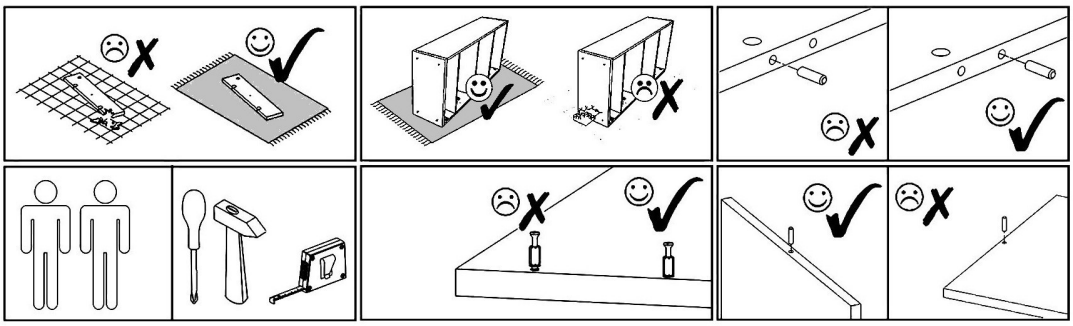

V13 x1	V7 x3	T8 H=120mm x4	B1 ø17/4mm x2	A2 ZW x4	P2 L=300mm x1	V16 5x16mm x8
M1 12x15mm x16	N1 L=35mm x16	E1 8x30mm x18	F1 7x50mm x8	F3 Hex 4mm x1	R1 6x8mm x10	S1 3,5x16mm x24	Z1 x50

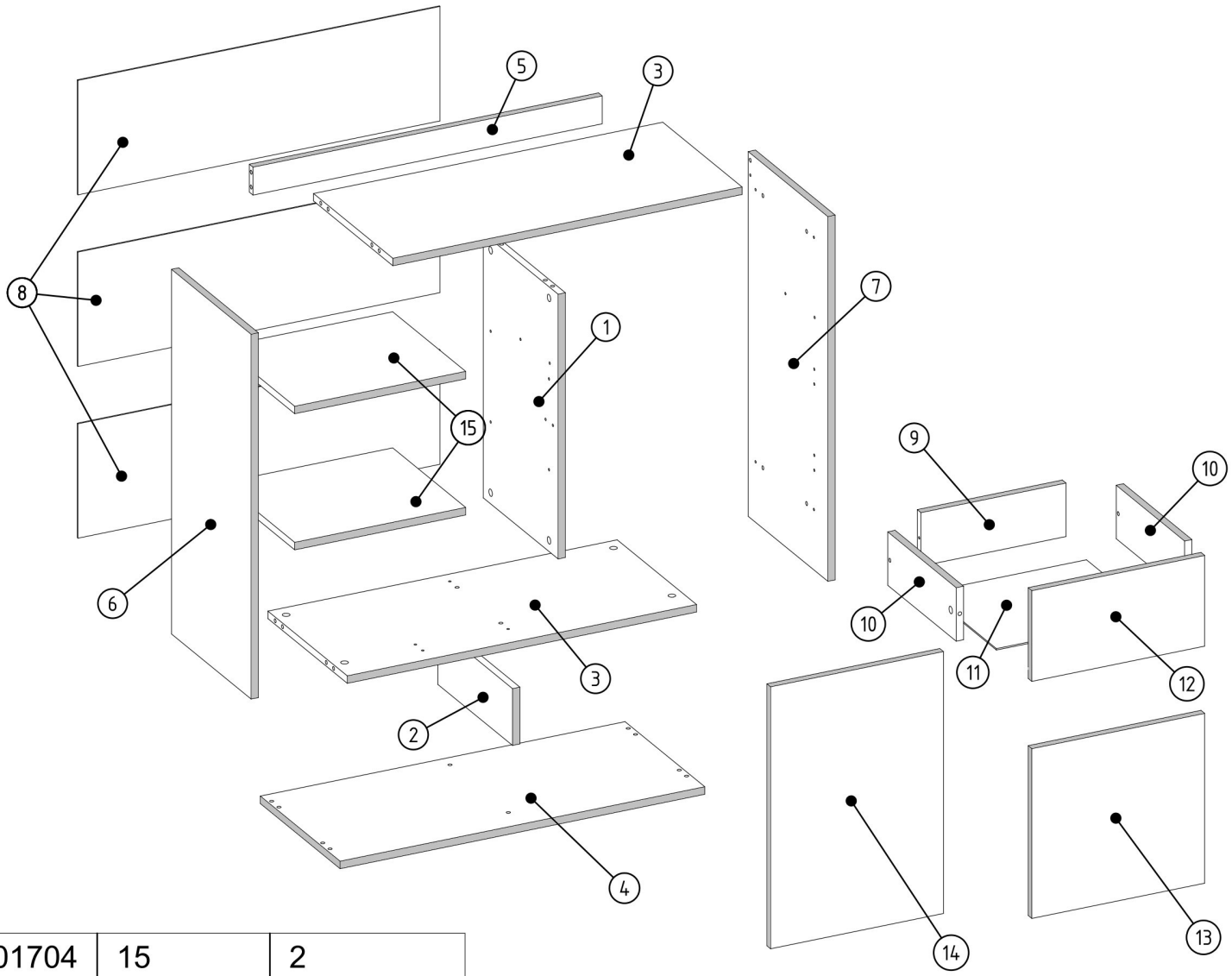

001704	15	2
001708	14	1
001707	13	1
001706	12	1
001698	11	1
001361	10	2
000038	9	1
001705	8	3
001710	7	1
001711	6	1
001709	5	1
001701	4	1
001699	3	2
001702	2	1
001703	1	1
ID	NUMBER	QUANTITY

M1	E1	V16	V7	P2	R1
12x15mm x4	8x30mm x4	5x16mm x4	x2	L=300mm x1	6x8mm x6

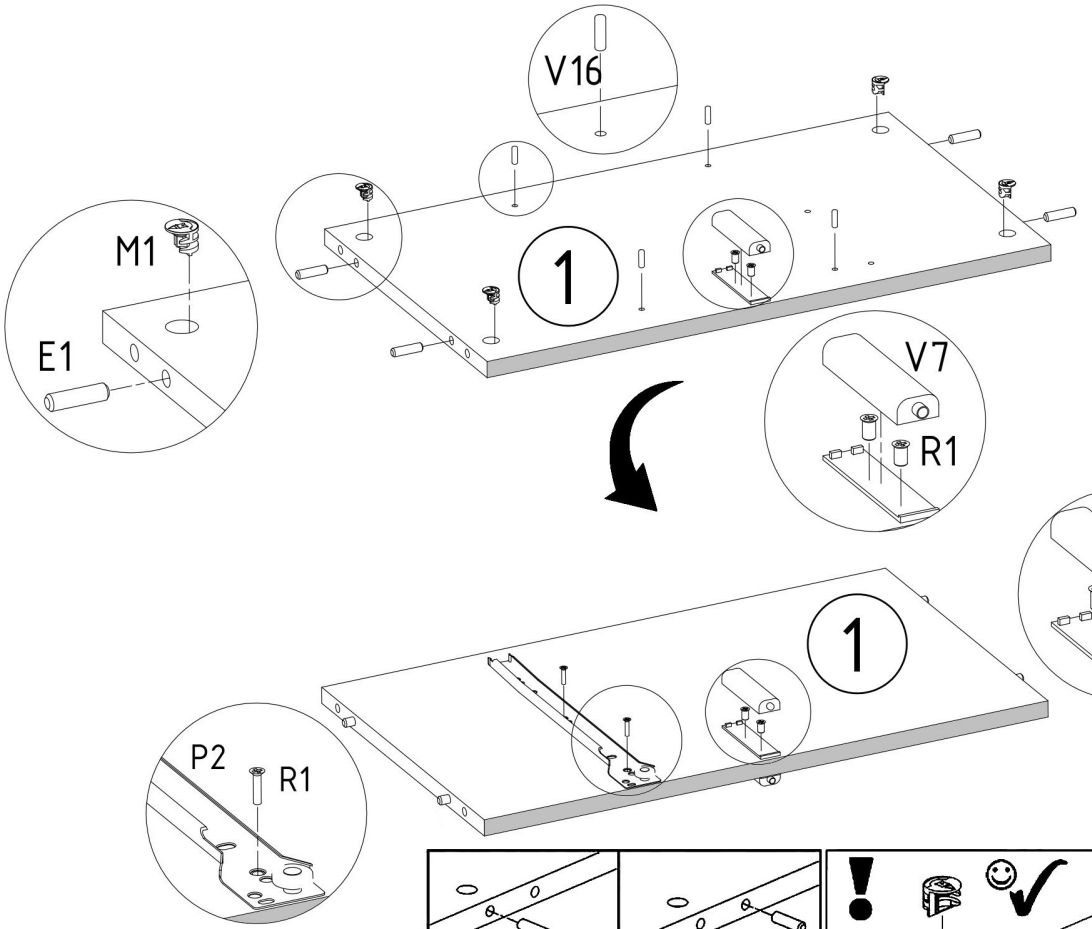

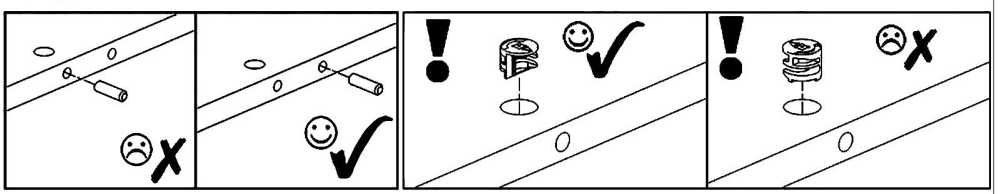

E1	N1	M1
8x30mm x4	L=35mm x2	12x15mm x4

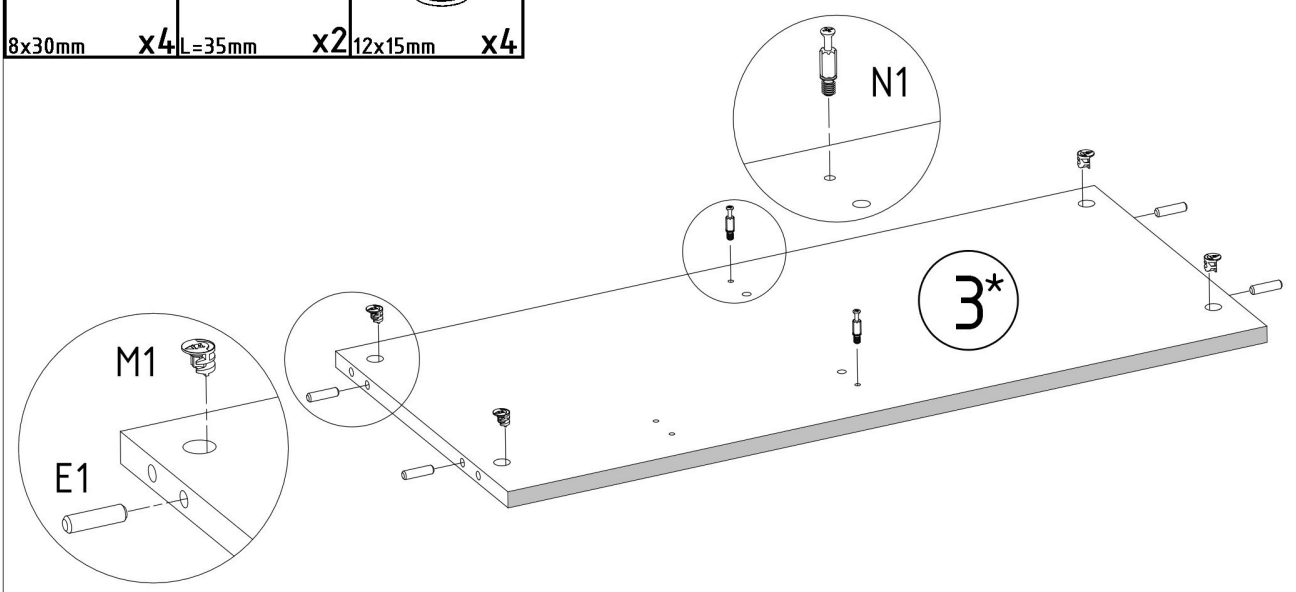

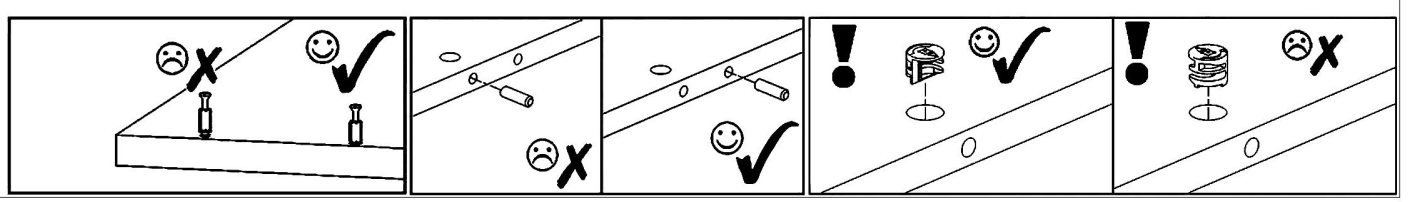

M1	N1	E1	V7	R1
			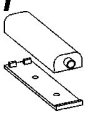	
12x15mm x4	L=35mm x2	8x30mm x4	x1	6x8mm x2

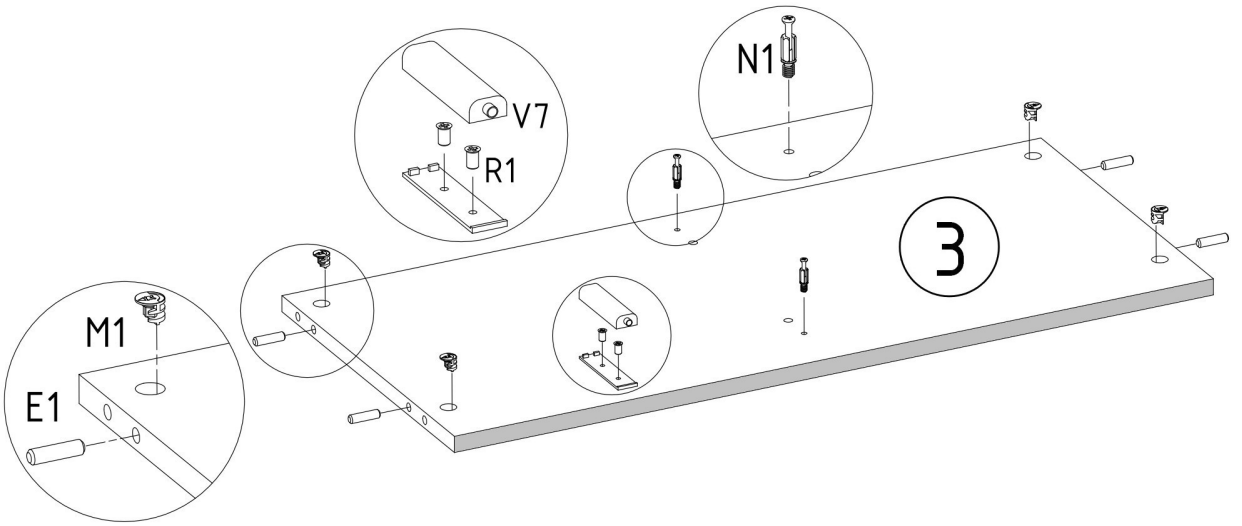

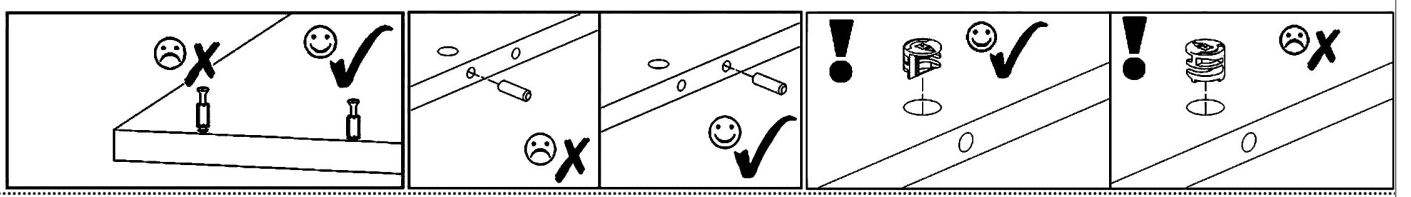

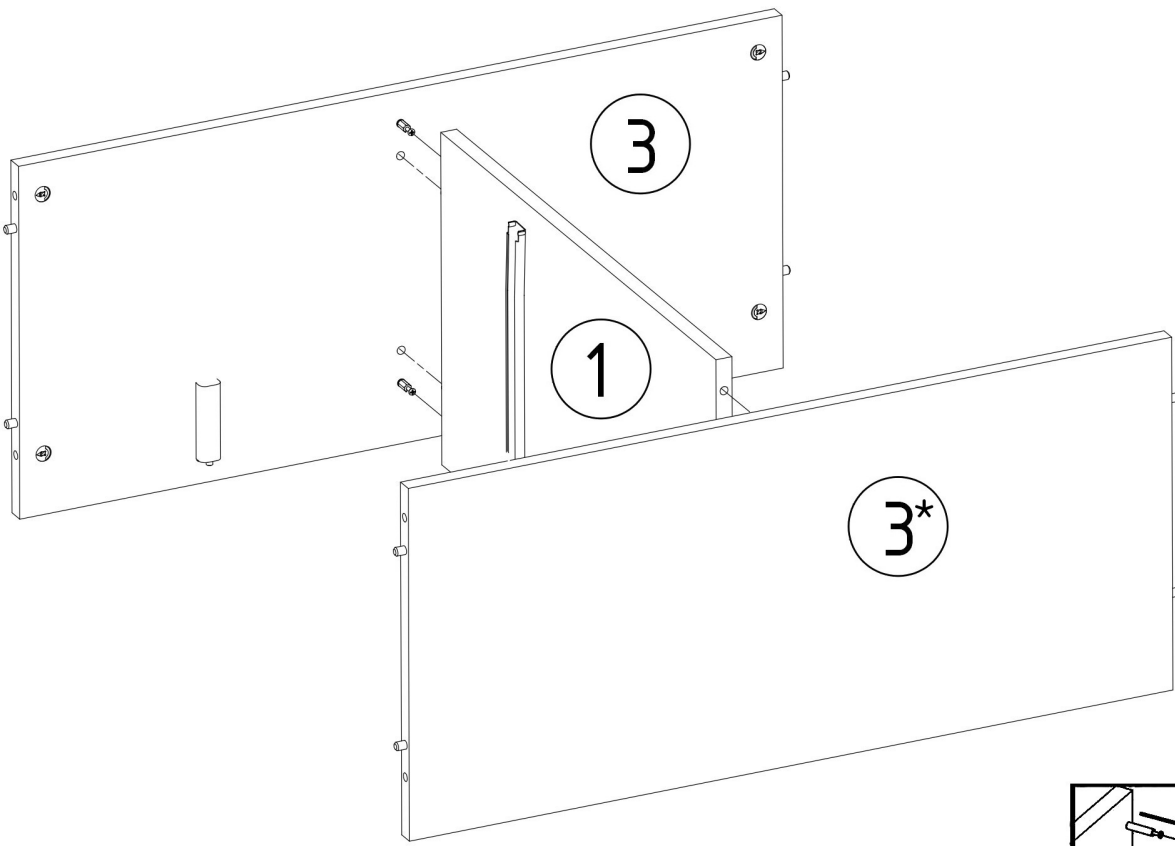

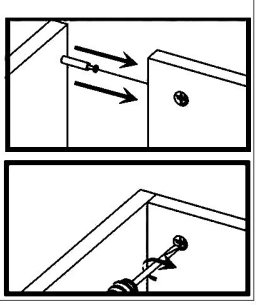

M1	E1
12x15mm x2	8x30mm x2

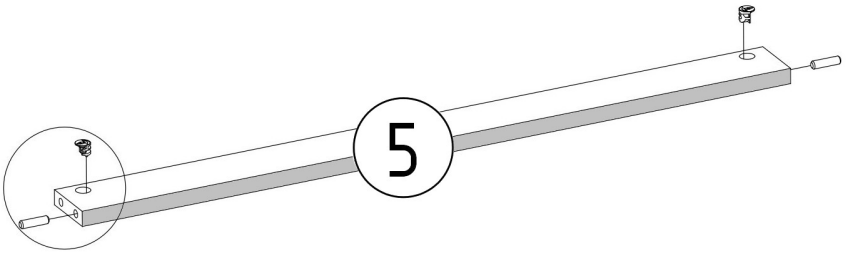

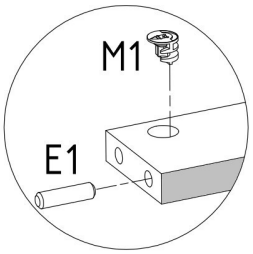

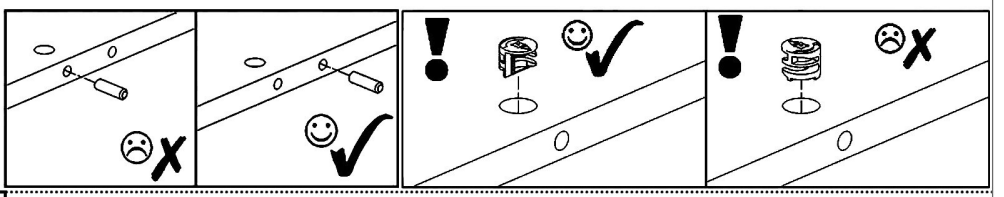

E1	N1	V16
8x30mm x2	L=35mm x5	5x16mm x4

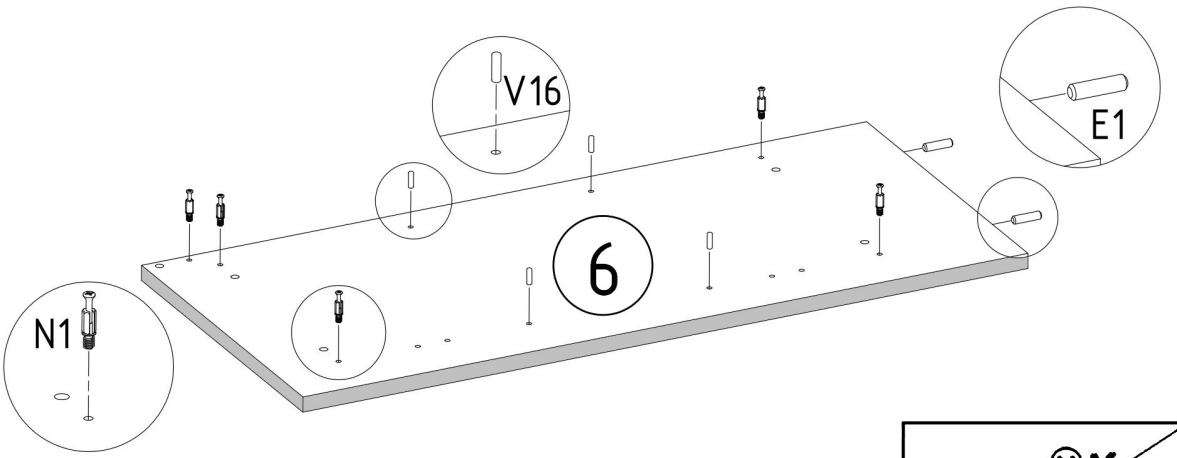

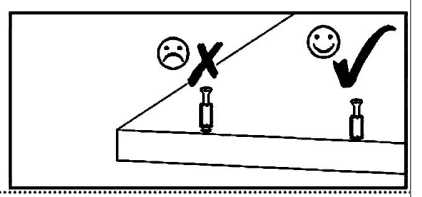

N1	E1	P2	R1
L=35mm x5	8x30mm x2	L=300mm x1	6x8mm x2

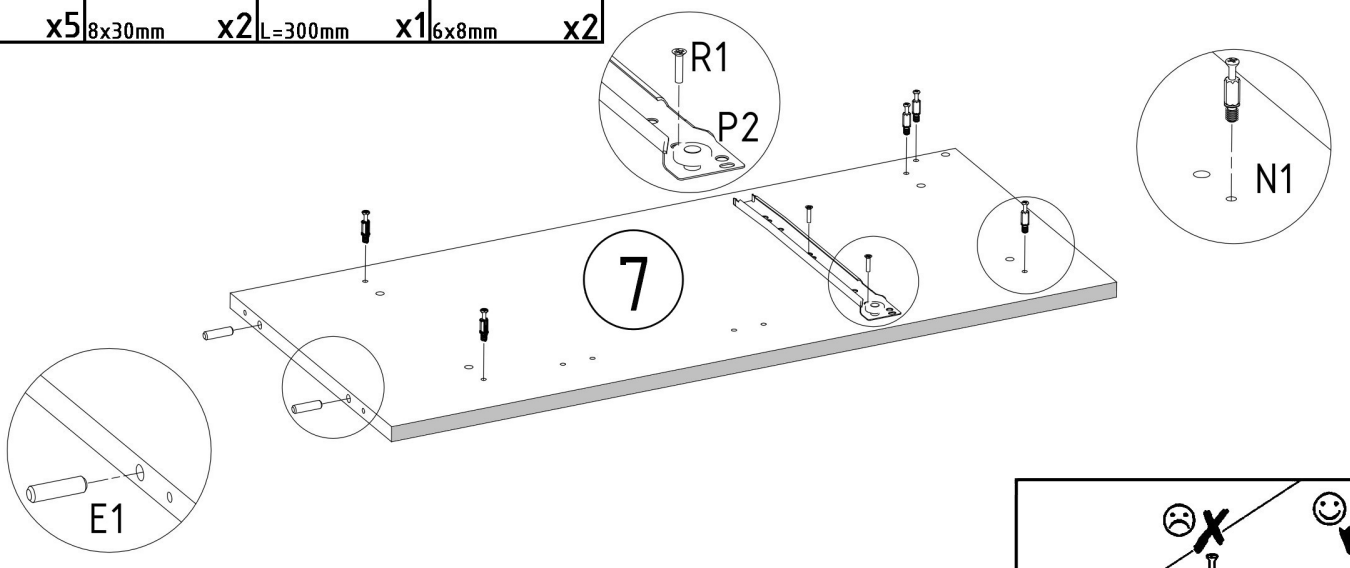

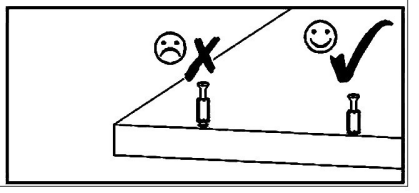

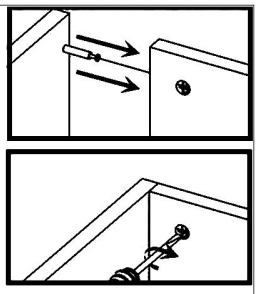

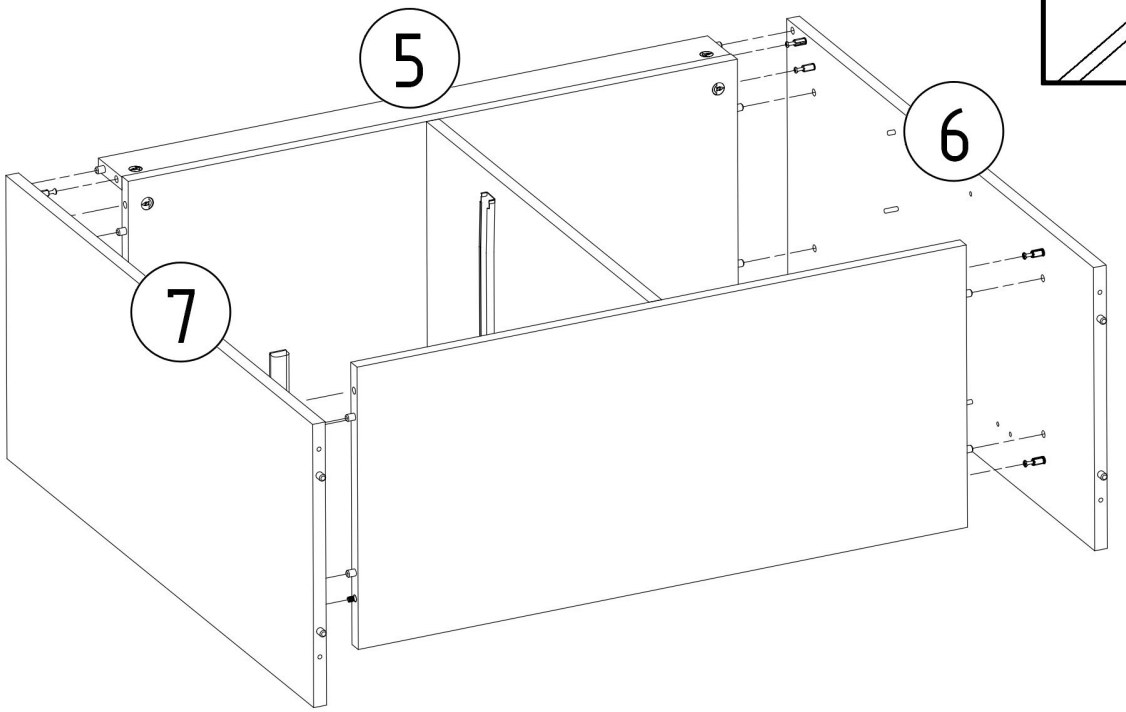

F1	F3
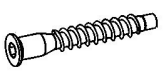 7x50mm x2	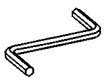 Hex 4mm

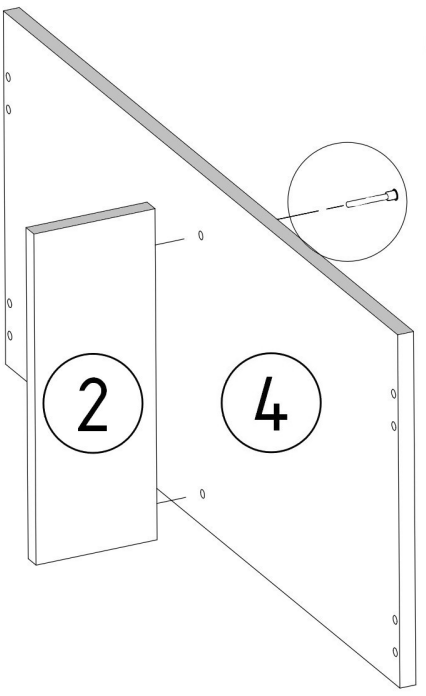

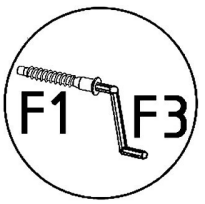

F1

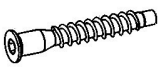

7x50mm x4

F3

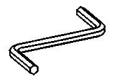

Hex 4mm

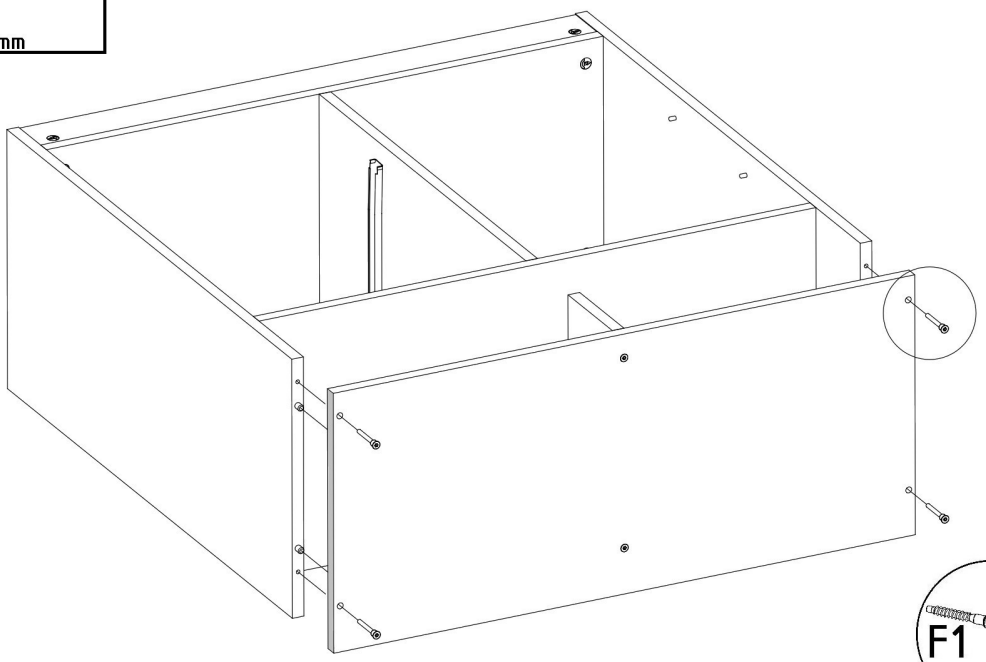



Z1



x44

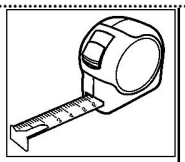

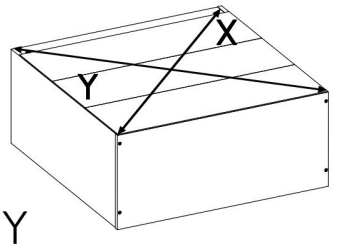

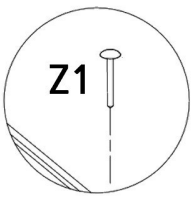

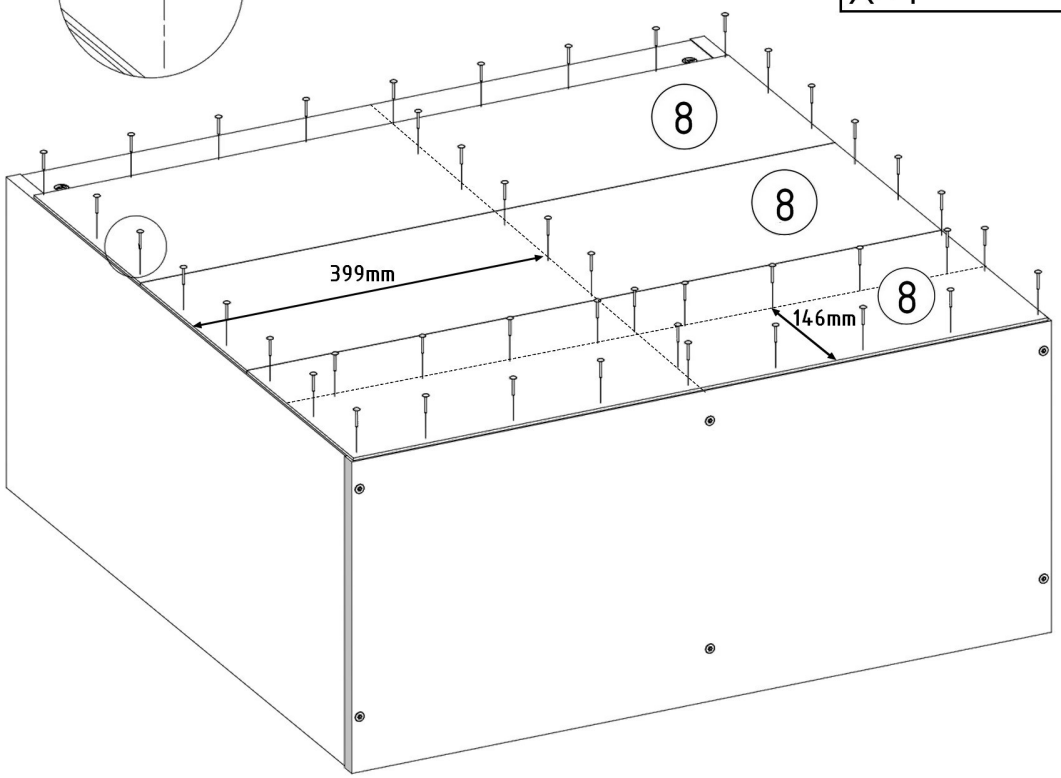

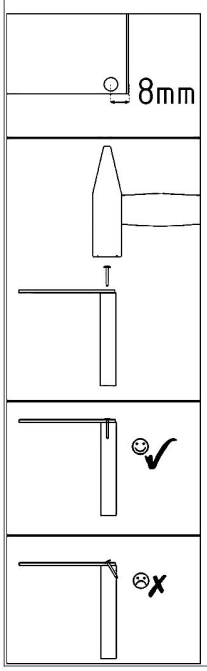

T8

H=120mm x4

S1

3,5x16mm x12

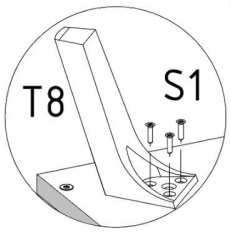

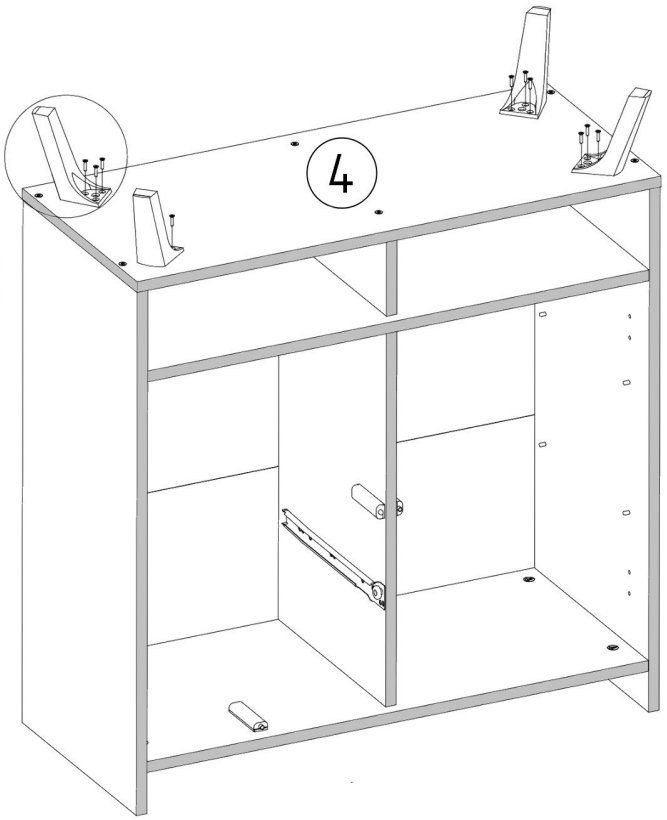

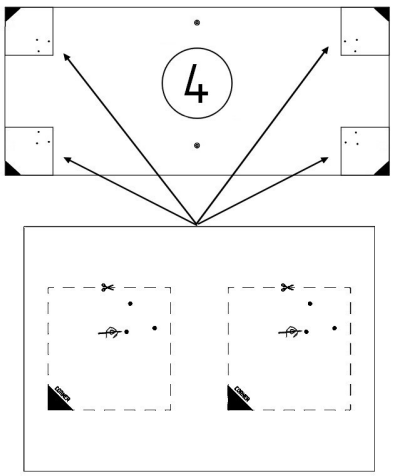

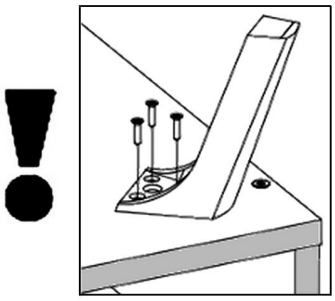

N1

L=35mm x2

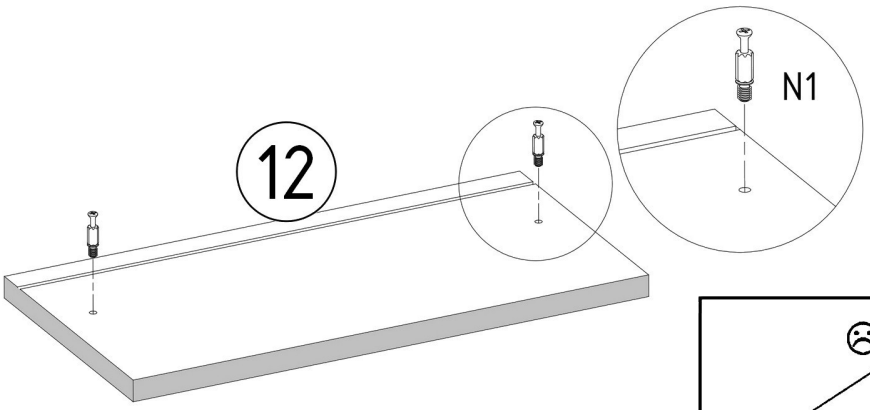

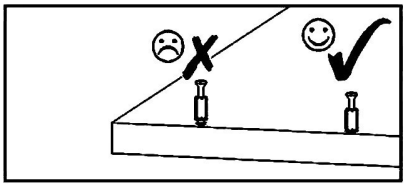

M1

12x15mm x2

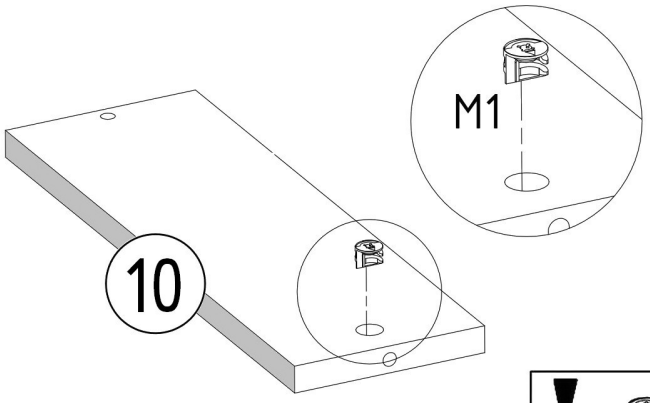

x2

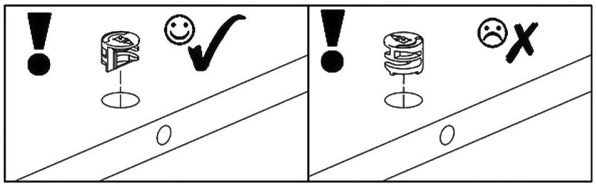

F1
7x50mm x2

F3
Hex 4mm

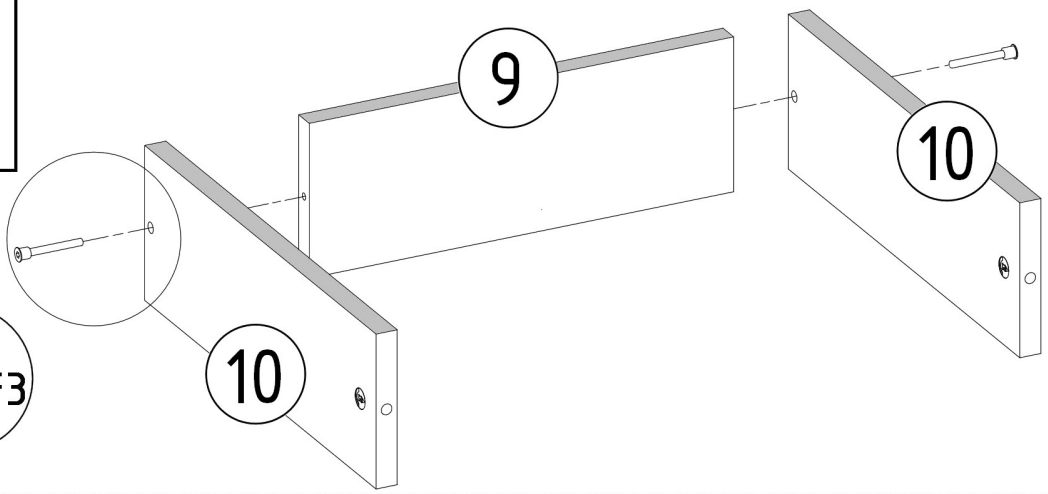

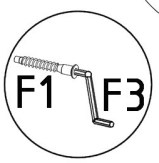

B1
ø17/4mm x2

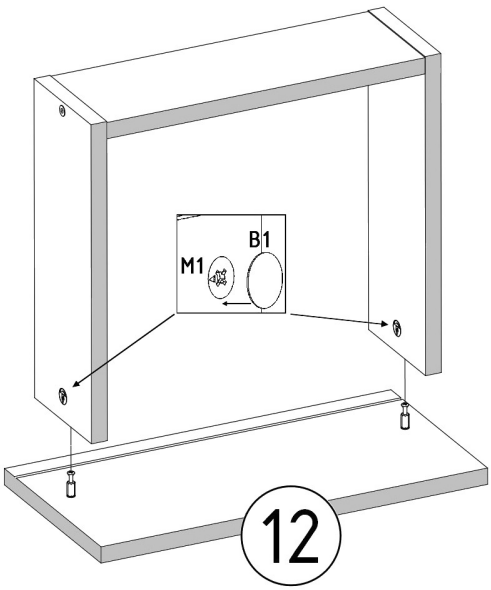

1.

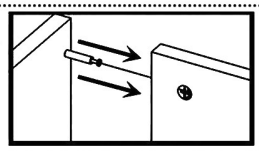

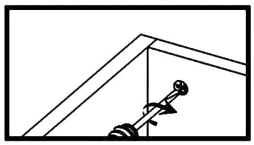

2.

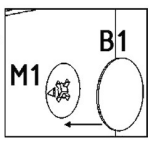

Z1
x6

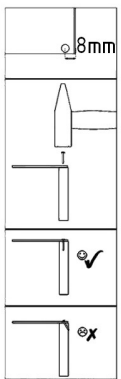

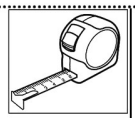

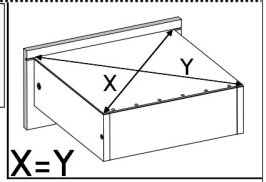

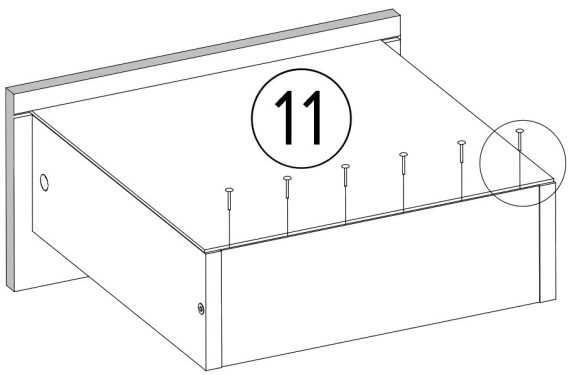

S1
3,5x16mm x4

P2
L=300mm x1

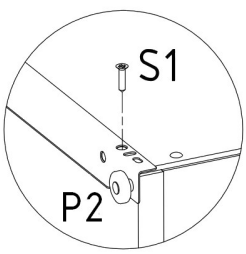

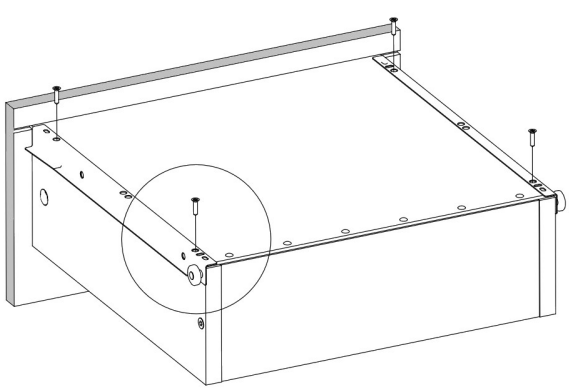

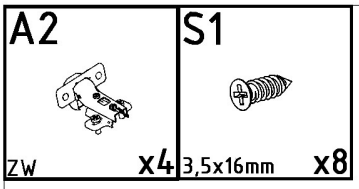
A2
ZW
x4
S1
3,5x16mm
x8

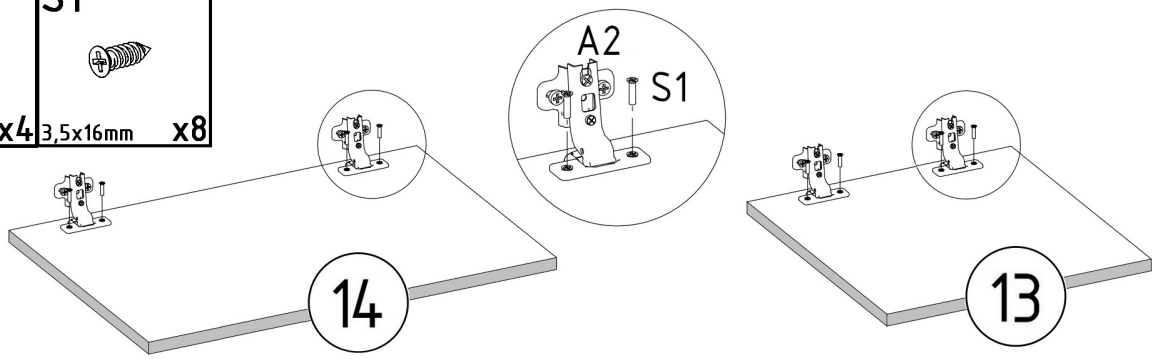
A2
S1
14
13


V13
x1

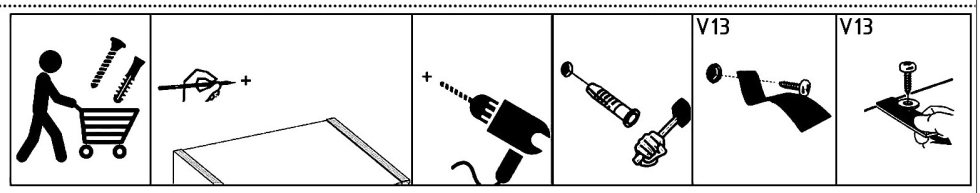
V13
V13

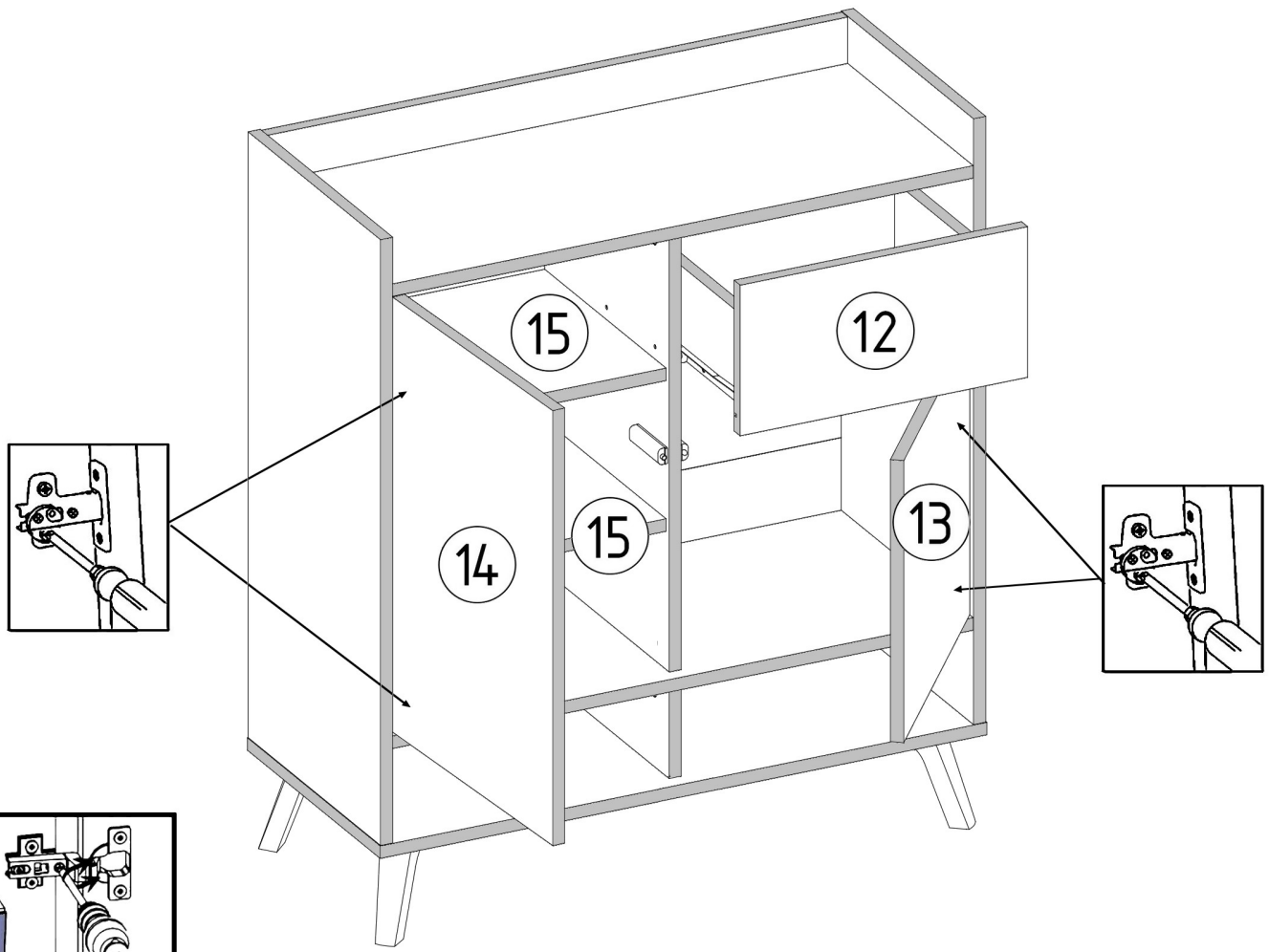
15
12
14
15
13

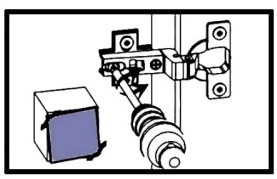

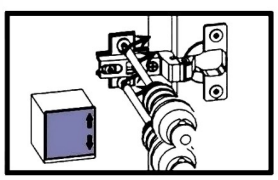

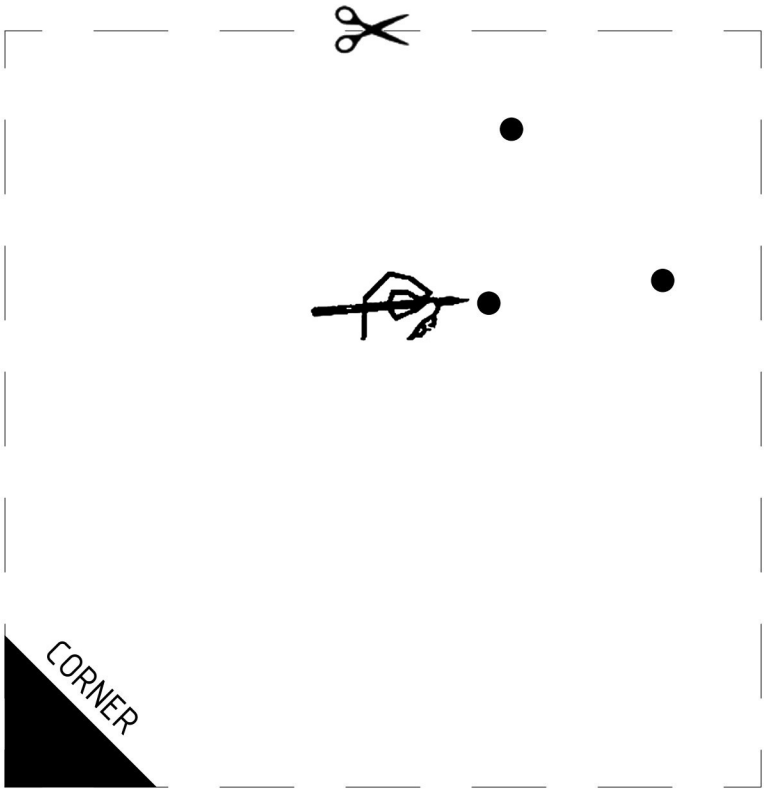
CORNER

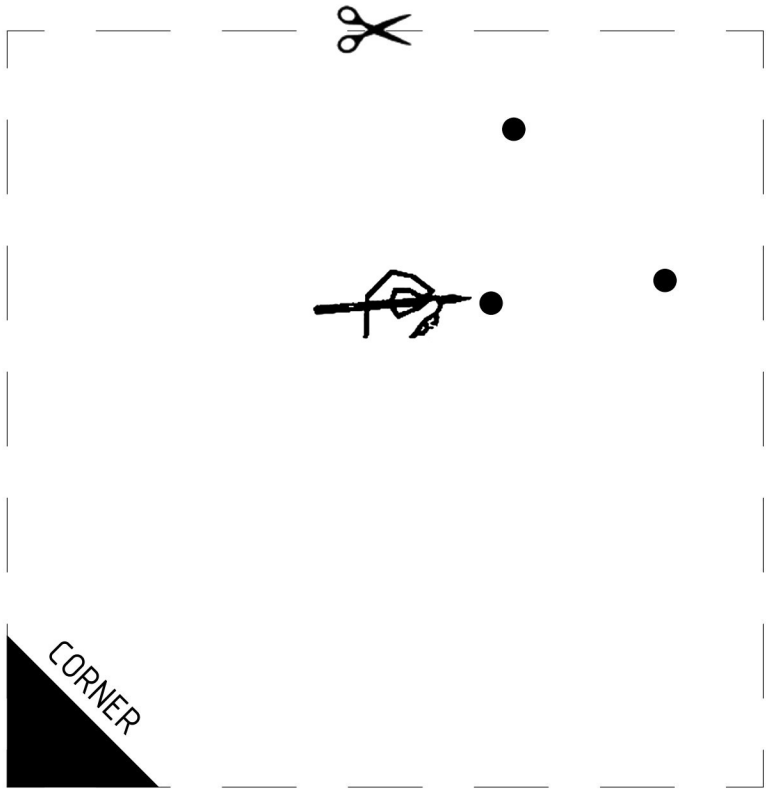
CORNER