INSTRUKCJA MONTAŻU

Nadstawka na biurko 130 cm z 5 półkami

Kolor: Biały

Kod produktu: OR10412

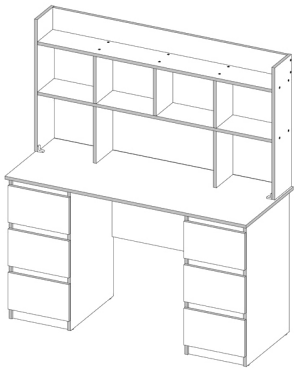

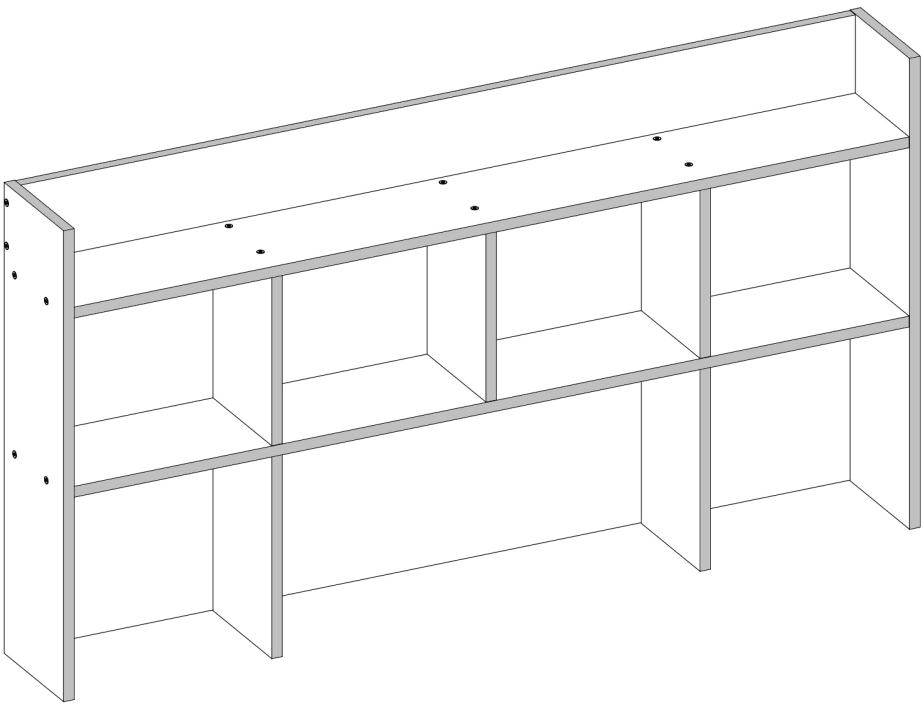

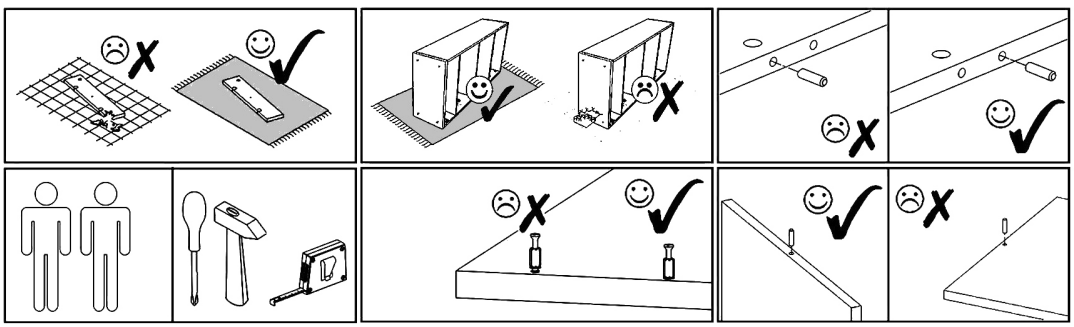

B1  ø17/4mm x10	B2 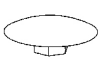 ø12/4mm x18	V61 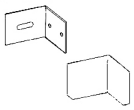 x2	V60  8,5X10,5mm x2	S9  4x16mm x8	B3  ø 7-8/5mm x2
N1  L=35mm x2	S1  3,5x16mm x4	N4  L=62mm x4	V15  x8	Z1  x50	F1  7x50mm x18
F3 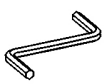 Hex 4mm x1	M1  12x15mm x10				

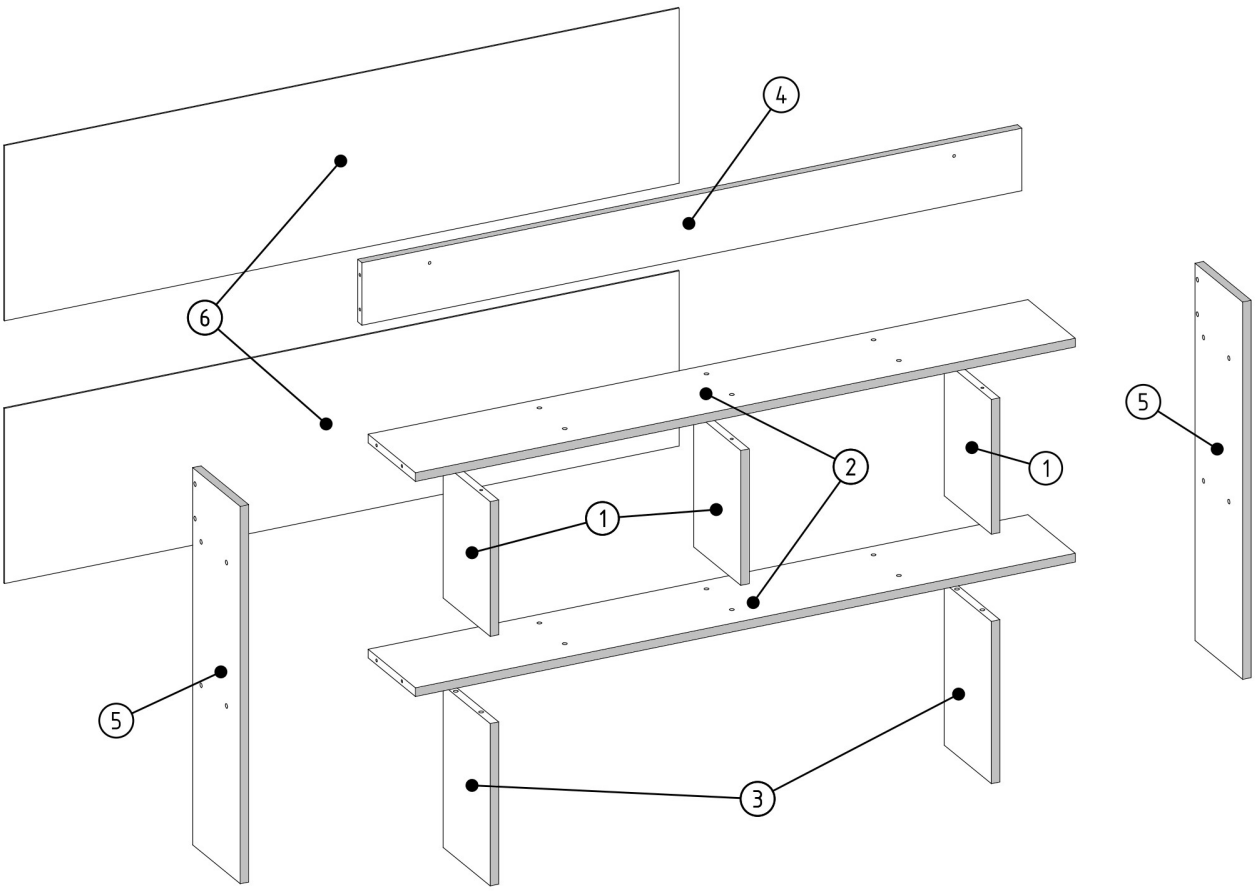

001593	6	2
001582	5	2
001591	4	1
001584	3	2
001589	2	2
001586	1	3
ID	NUMBER	QUANTITY

M1

12x15mm x6

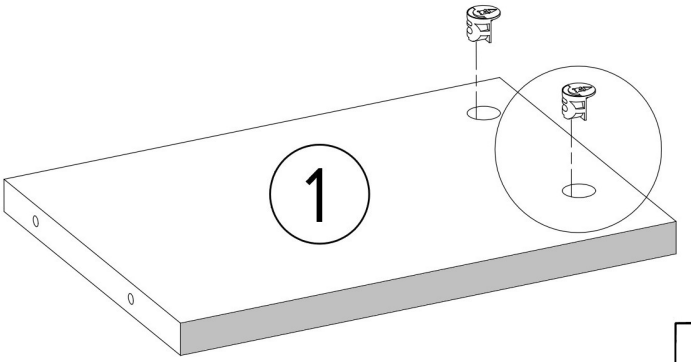

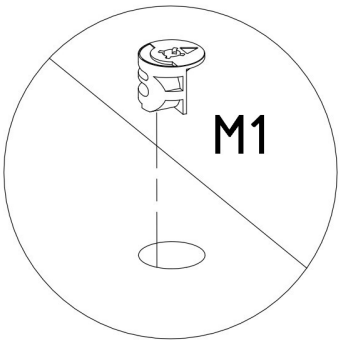

x3

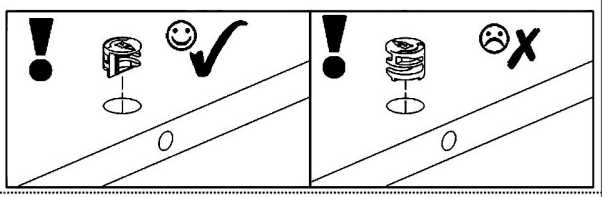

N1

L=35mm x2

V60

8,5X10,5mm x2

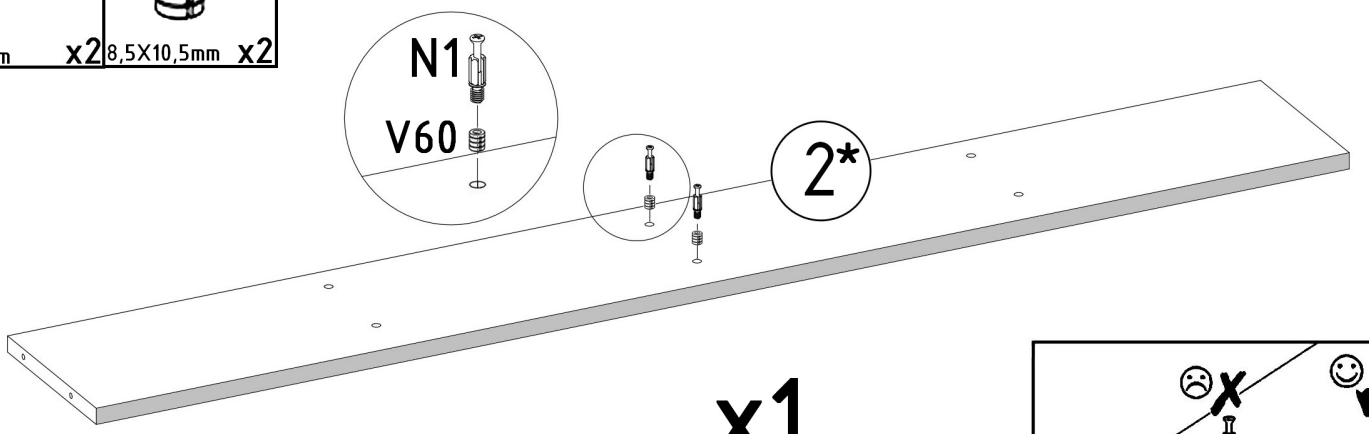

x1

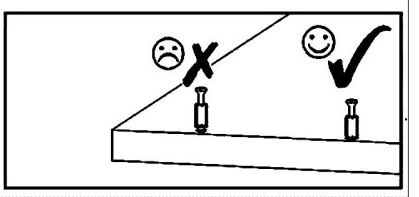

M1

12x15mm x4

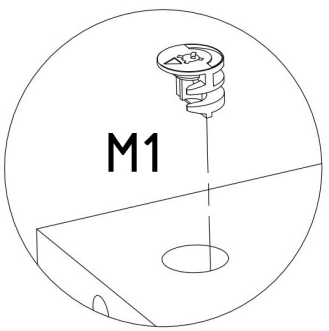

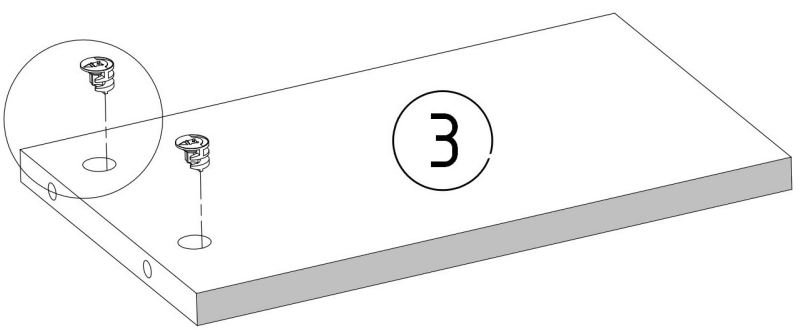

x2

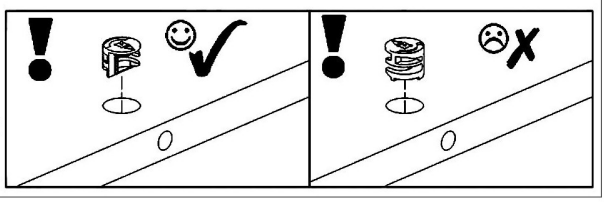

N4	F1	F3
	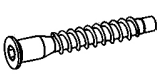	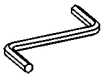
L=62mm x4	7x50mm x6	Hex 4mm

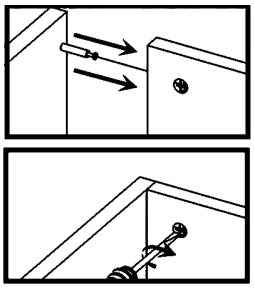

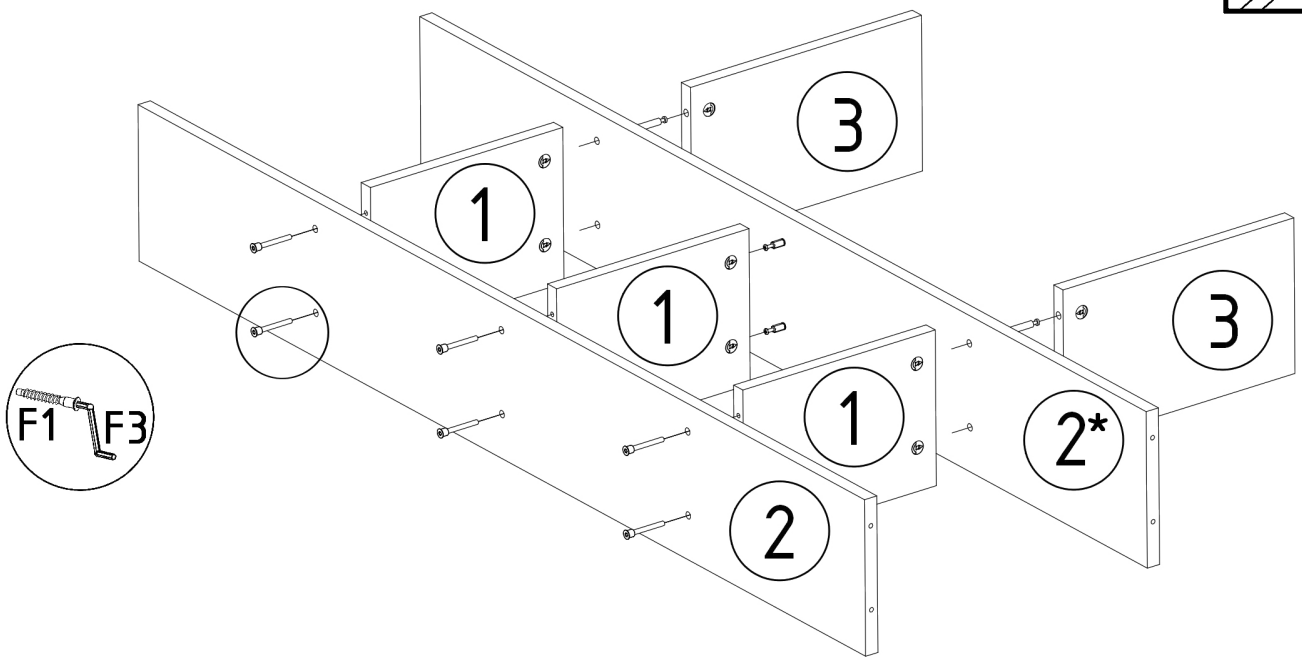

F1	F3
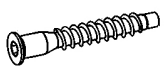	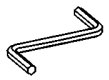
7x50mm x12	Hex 4mm

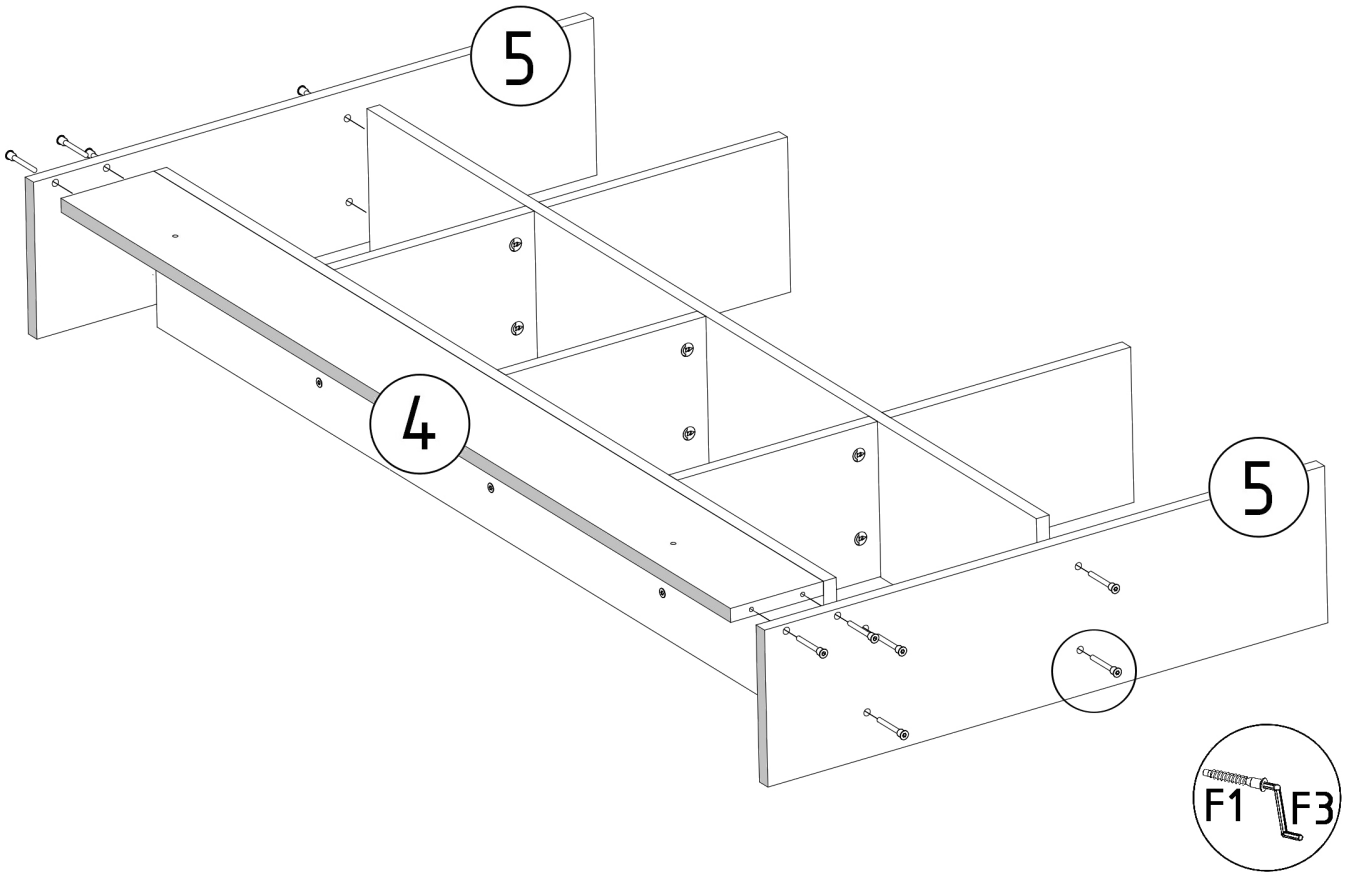

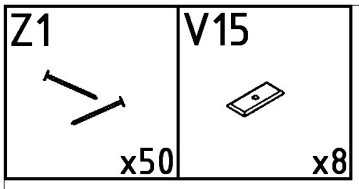
Z1
x50
V15
x8

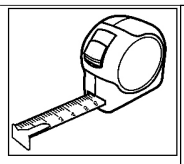

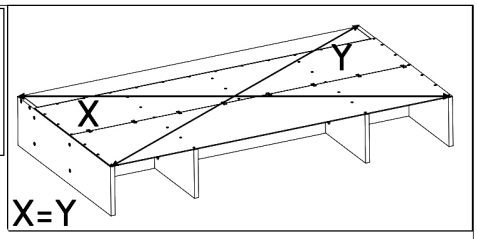
X
Y
X=Y

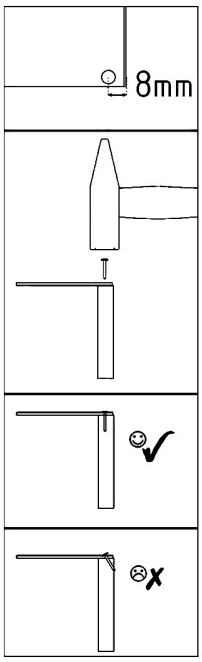
8mm

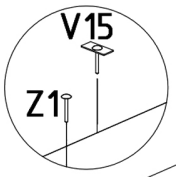
V15
Z1

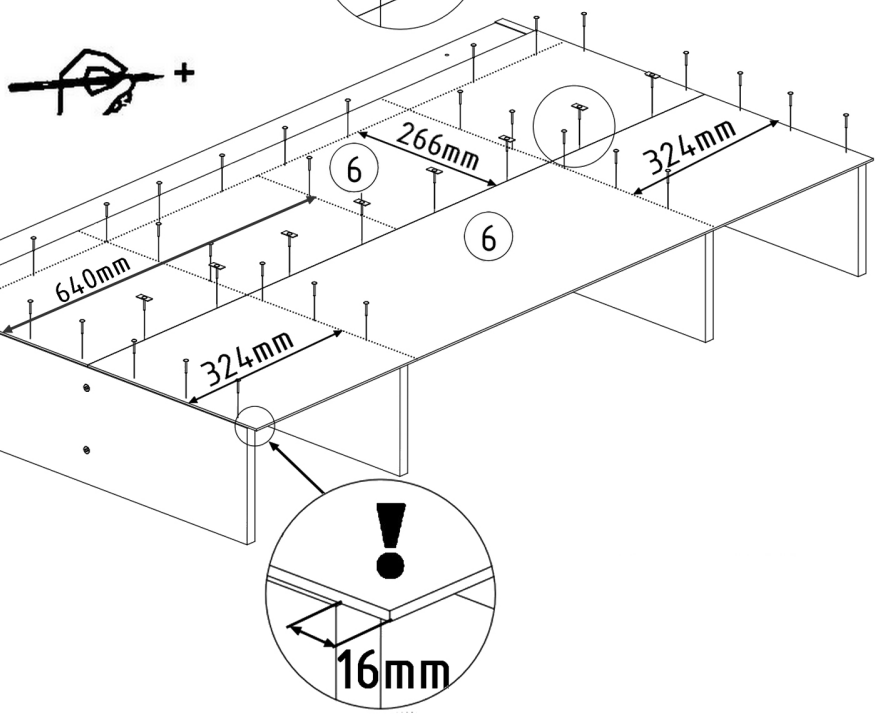
6
266mm
324mm
6
640mm
324mm

16mm

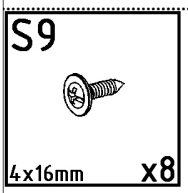
S9
4x16mm
x8

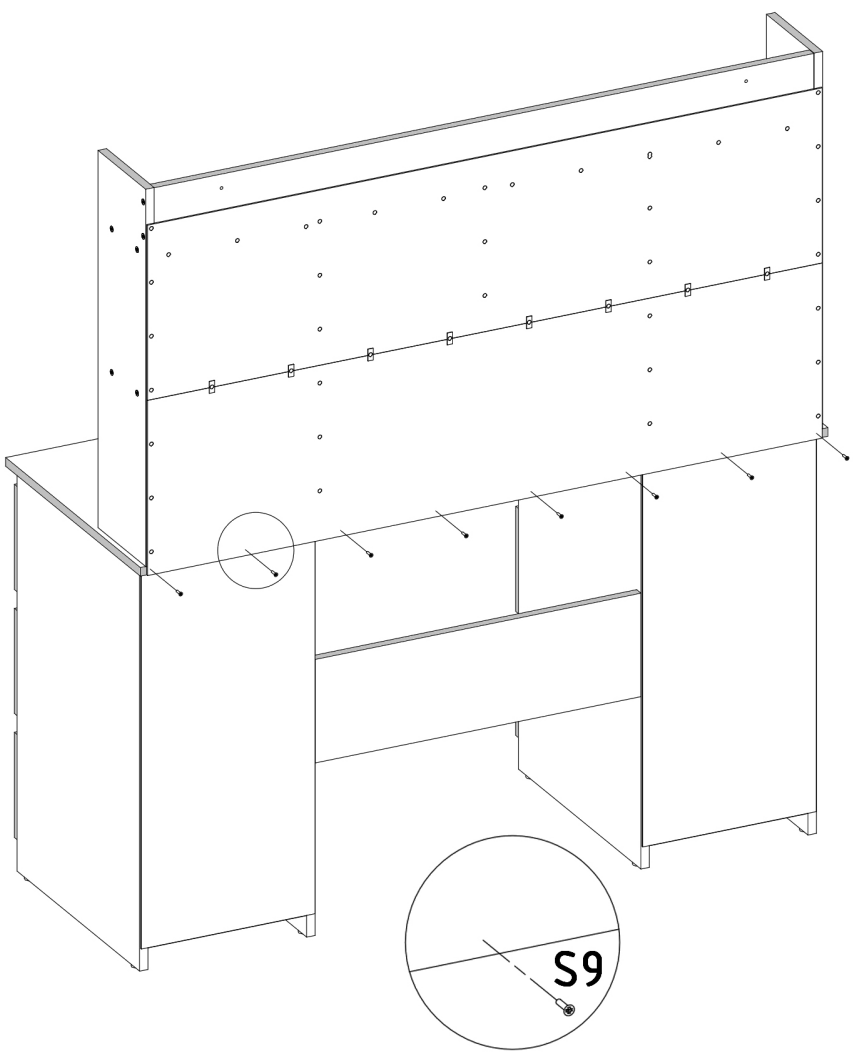
S9

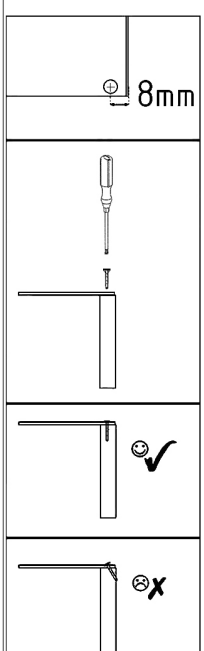
8mm

B1	B2
ø17/4mm x10	ø12/4mm x18

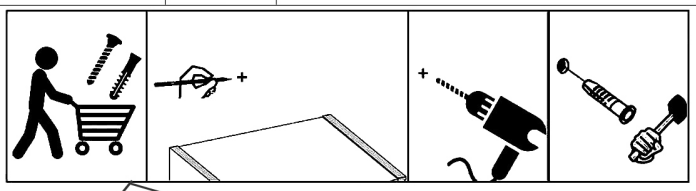

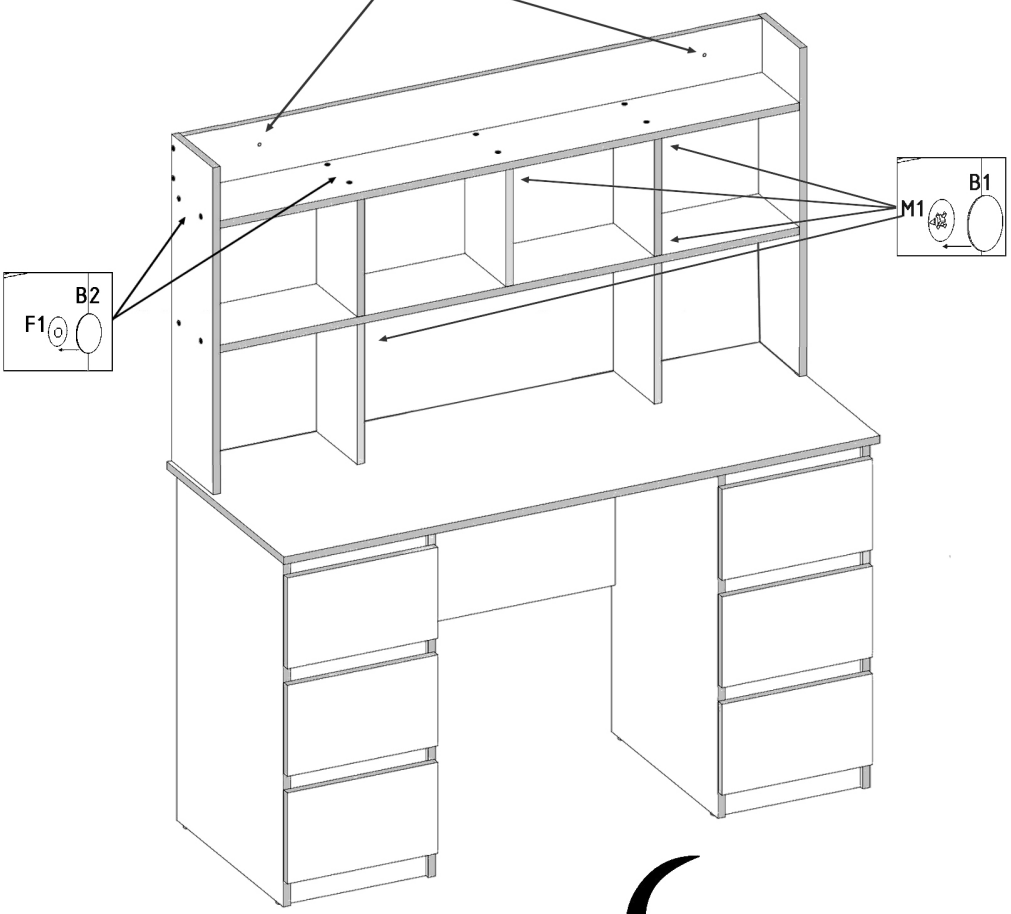

V61	B3	S1
x2	ø7-8/5mm x2	3,5x16mm x4

B1	B2
ø17/4mm x10	ø12/4mm x18

