INSTRUKCJA MONTAŻU

Szafka nocna 45 cm z 2 szufladami na nóżkach

Kolor: Dąb Bookmatch

Kod produktu: OR10547



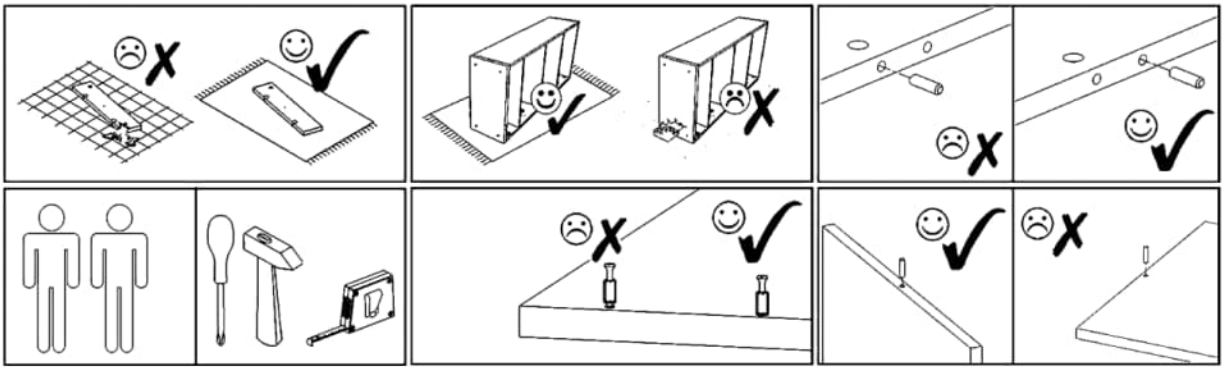

E1 8x30mm x8	F1 7x50mm x4	F3 Hex 4mm x1	P1 L=250mm x2	R1 6x8mm x8	S1 3,5x16mm x20	V12 GLUE x1	Z1 x40
B1 B ø17/4mm x4	S7 4x25mm x4	T8 H=120mm x4	U19 L=152/128mm x2	V13 x1	M1 12x15mm x4	N1 L=35mm x4	

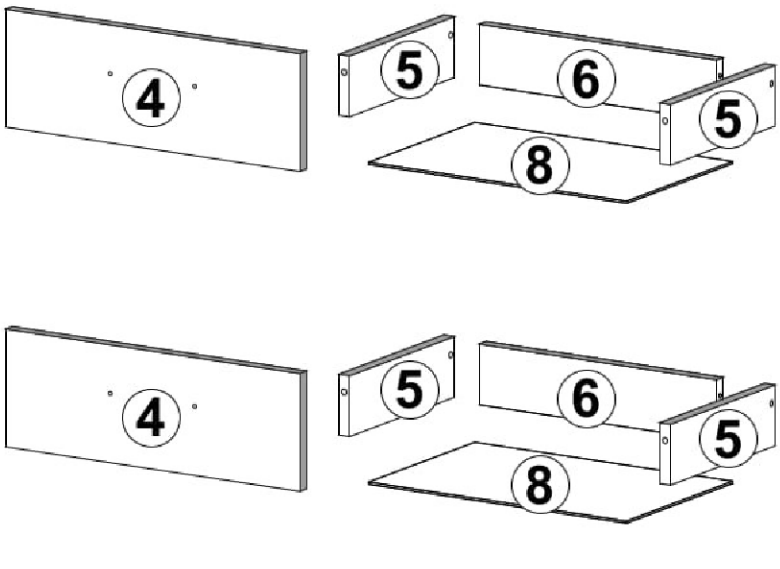

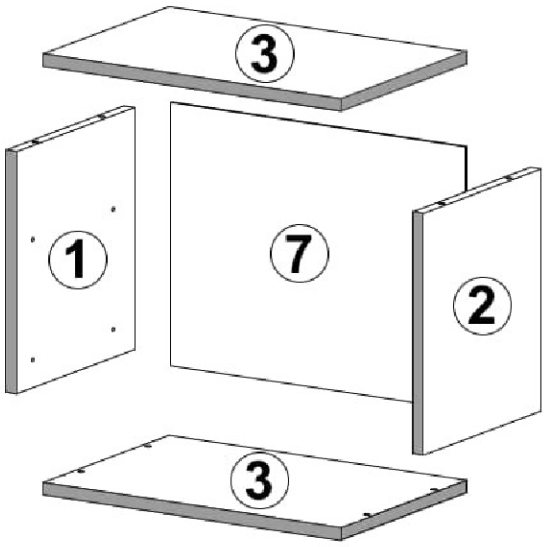

1	1
2	1
3	2
4	2
5	4
6	2
7	1
8	2
NUMBER	QUANTITY

E1	R1	P1	V12
8x30mm x8	6x8mm x8	L=250mm x2	x1

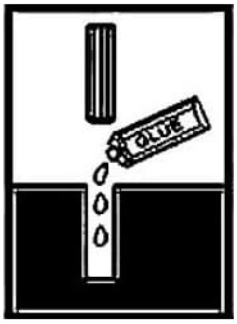

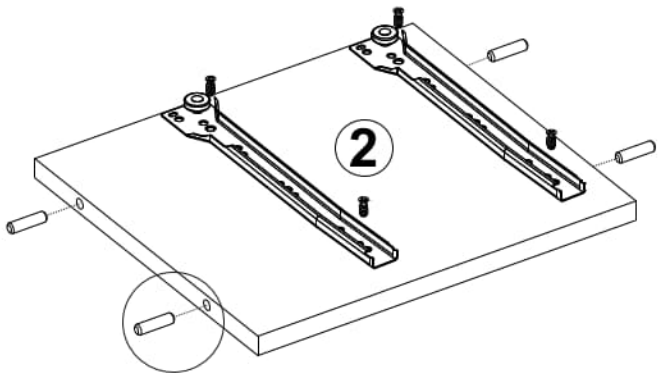

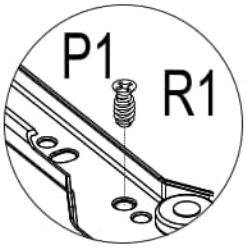

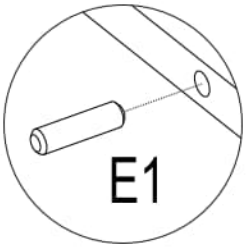

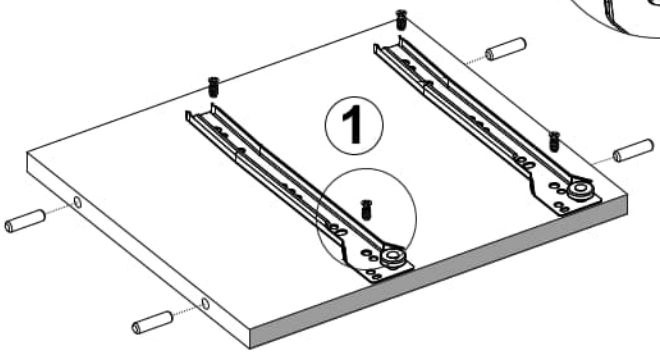

V12
x1

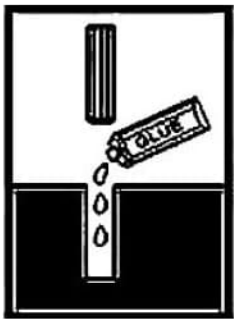

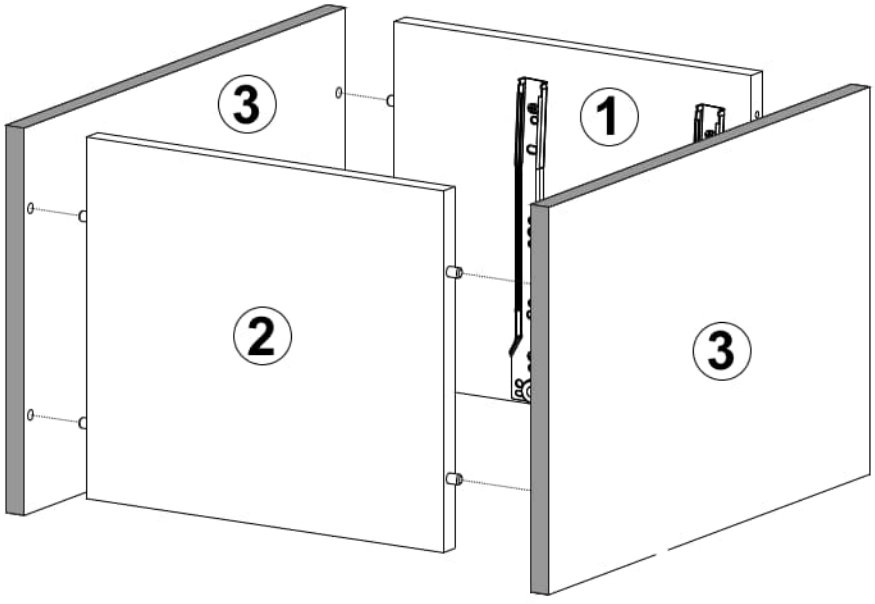

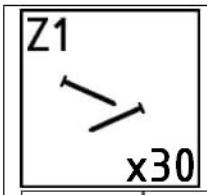
Z1
x30

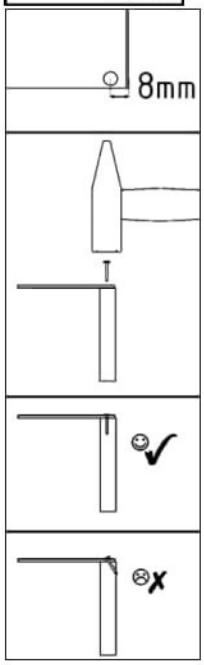
8mm

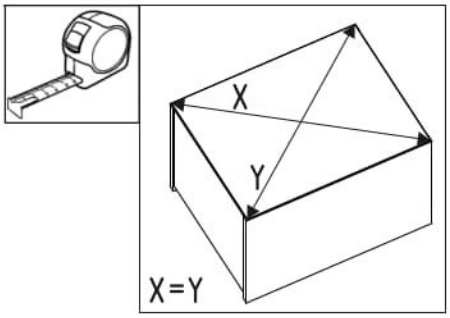
X
Y
X=Y

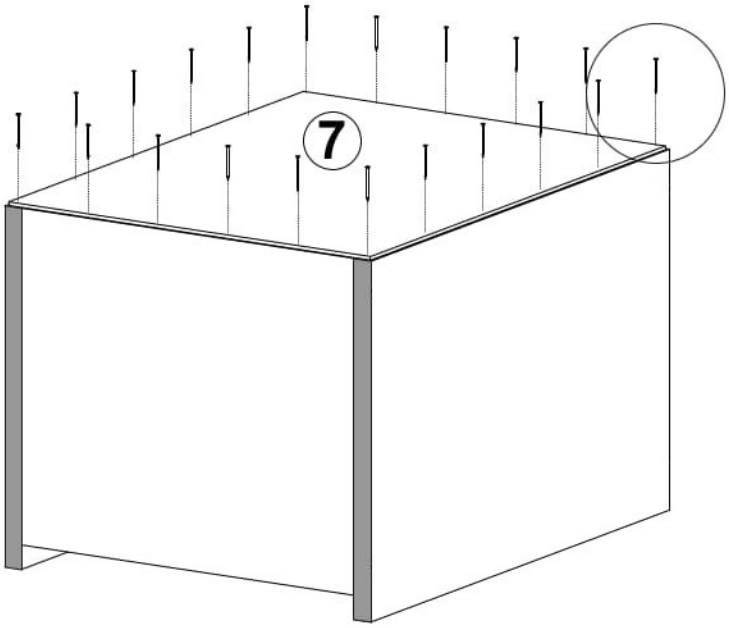
7

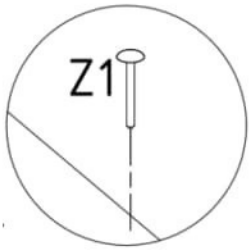
Z1

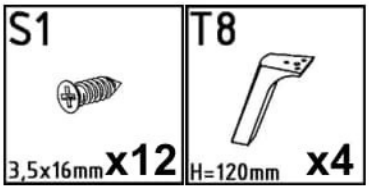
S1
3,5x16mm x12
T8
H=120mm x4

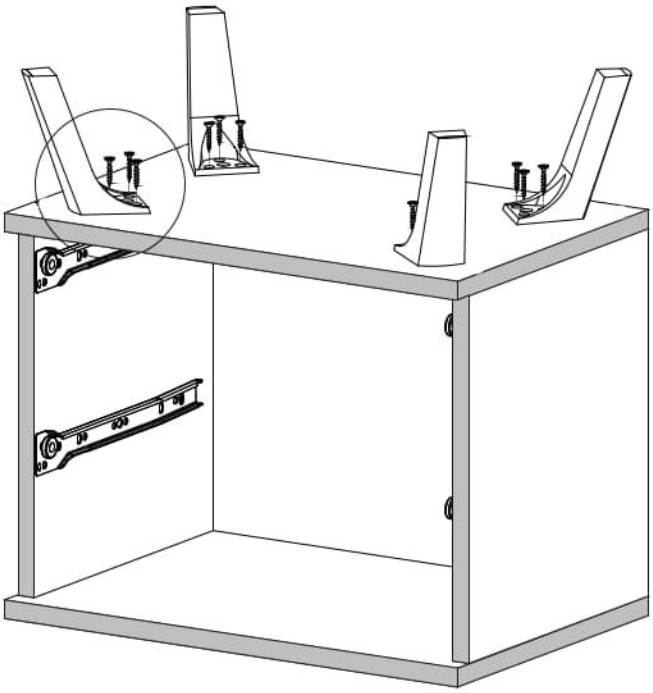

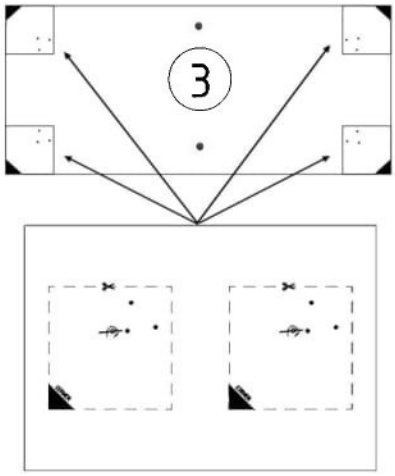
3

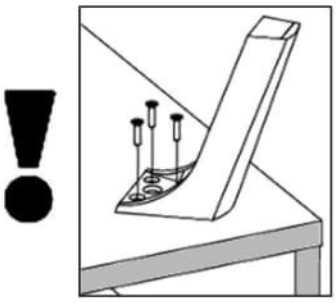

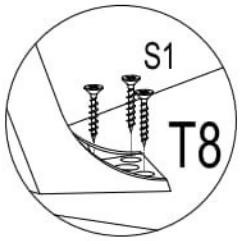
S1
T8

M1



12x15mm x4

x4

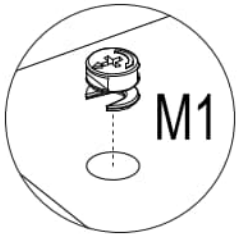

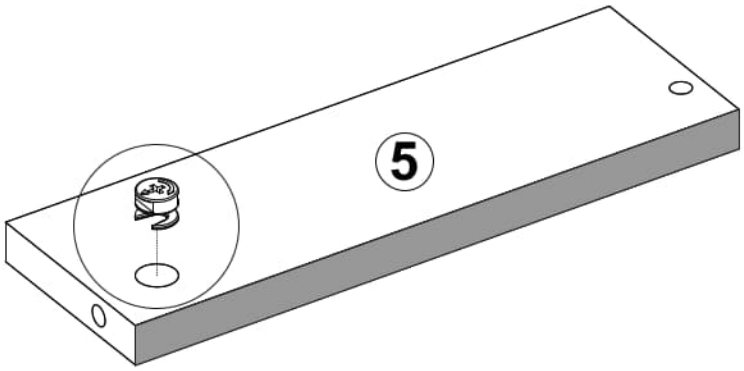

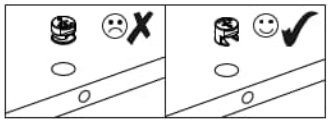

F1



7x50mm x4

F3



Hex 4mm x1



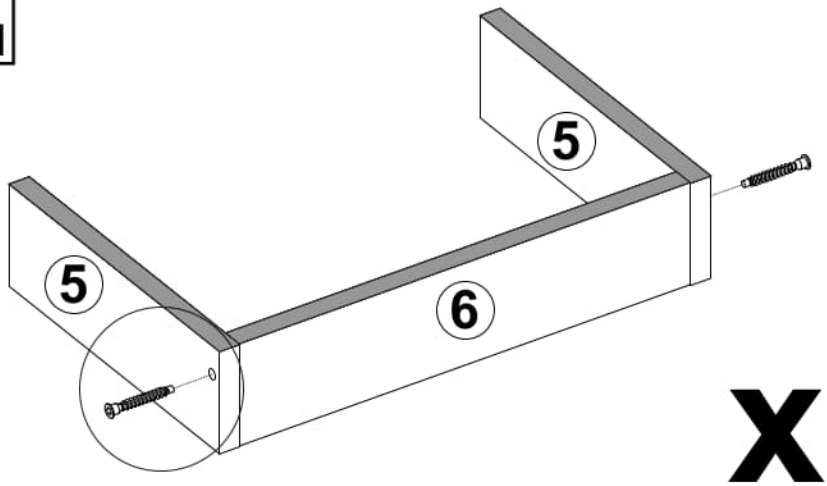

x2

N1



L=35mm x4

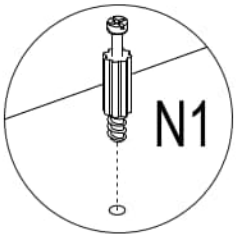

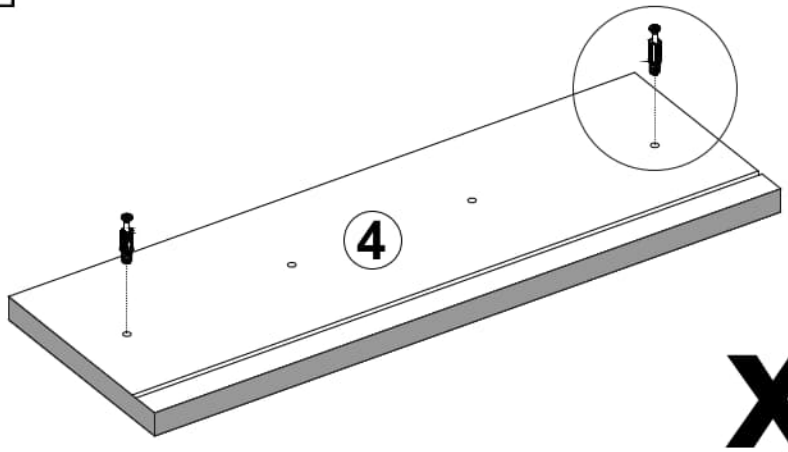

x2

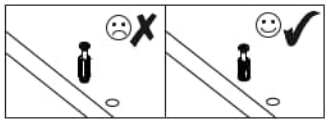

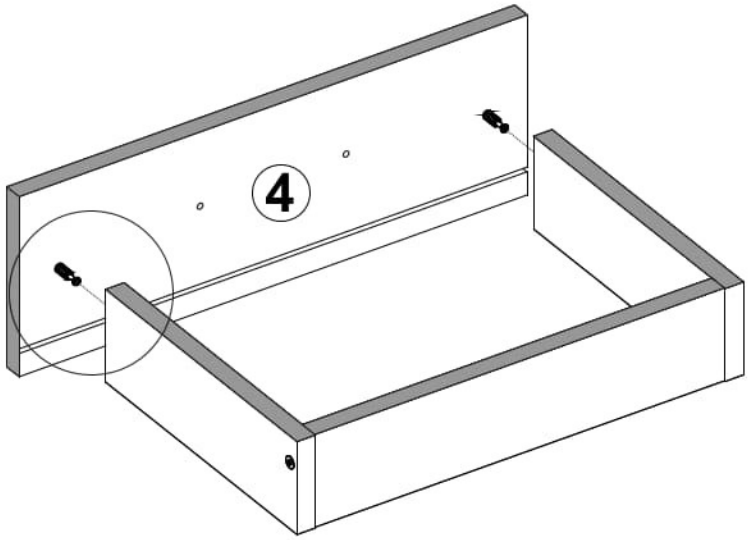

x2

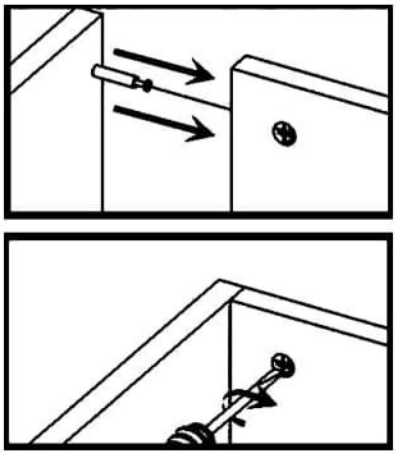

Z1

x10

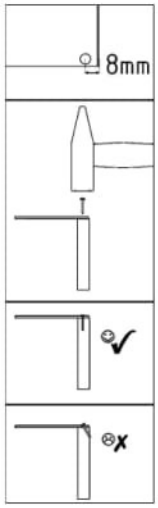

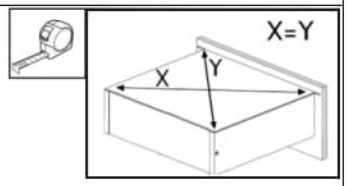

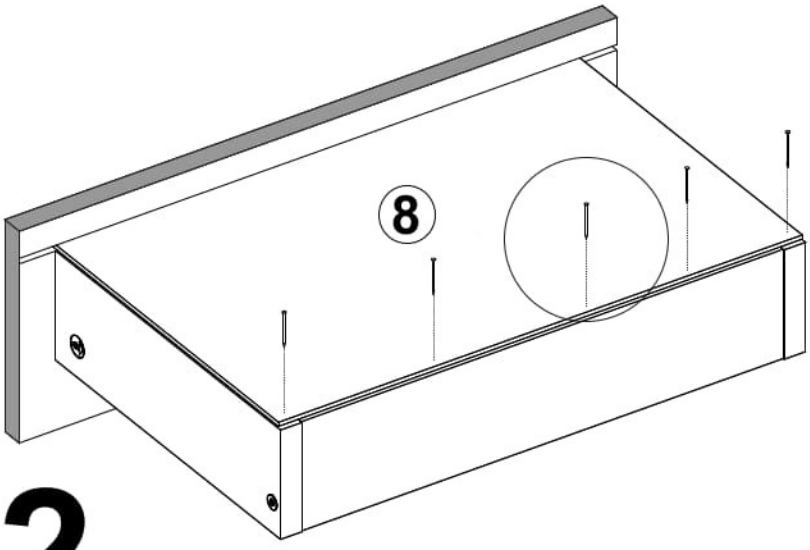

x2

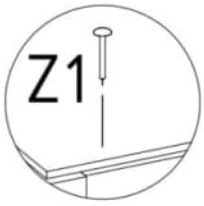



P1

L=250mm x2

S1

3,5x16mm x8

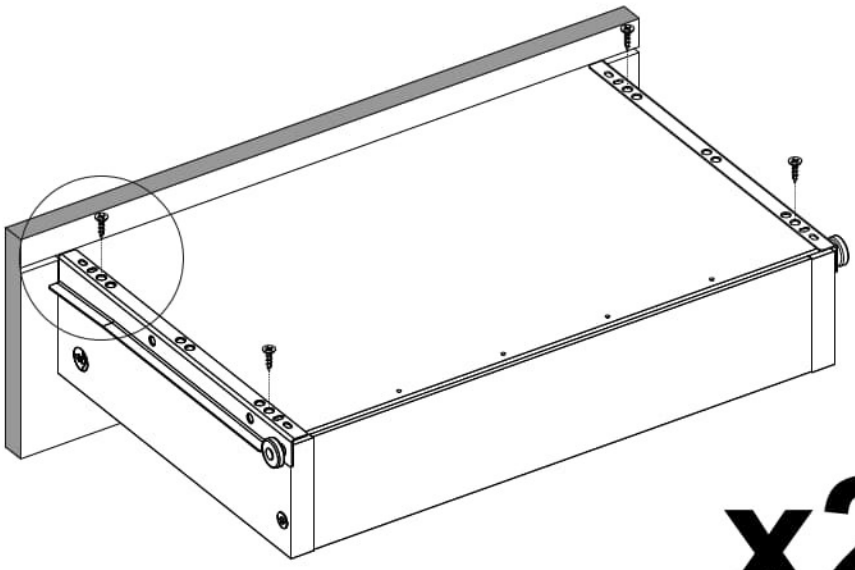

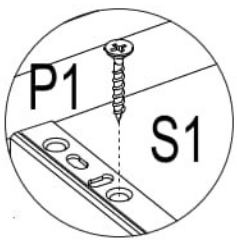

x2

S7
4x25mm x4

U19
L=152/128mm x2

x2

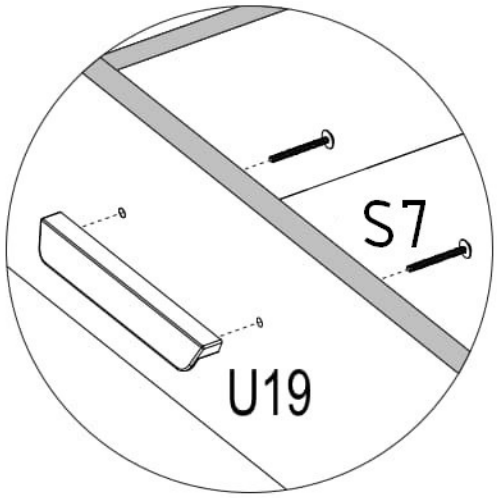

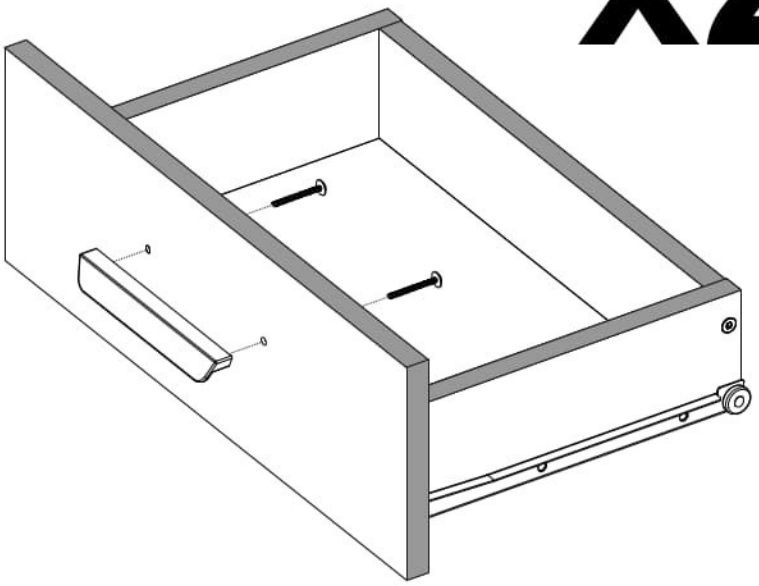

V13
x1

B1
ø17/4mm x4

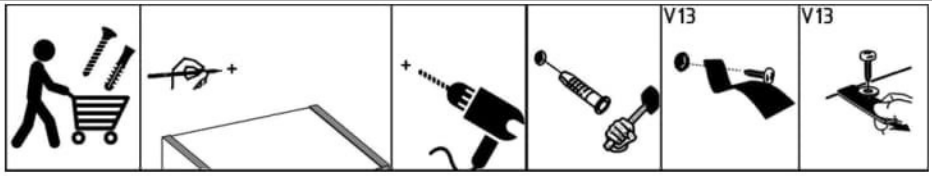

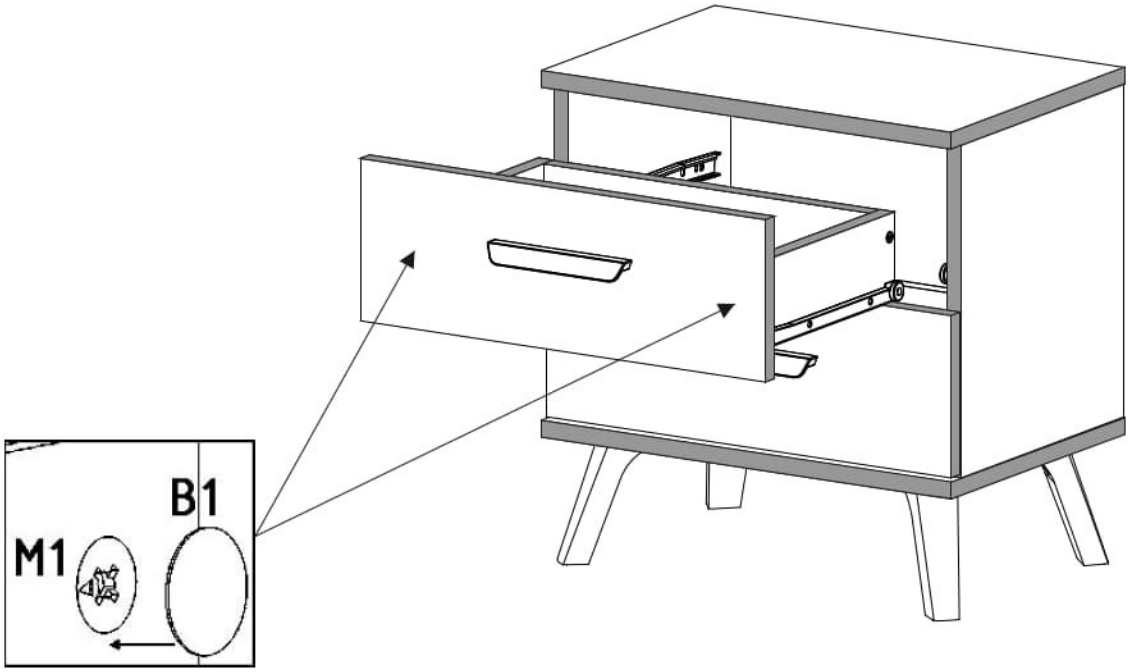

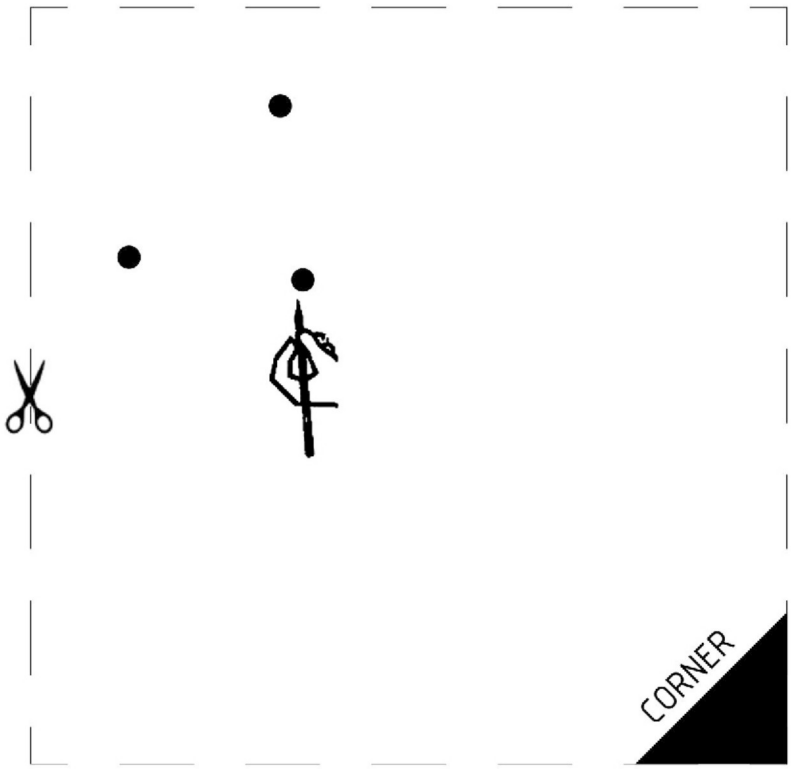
CORNER

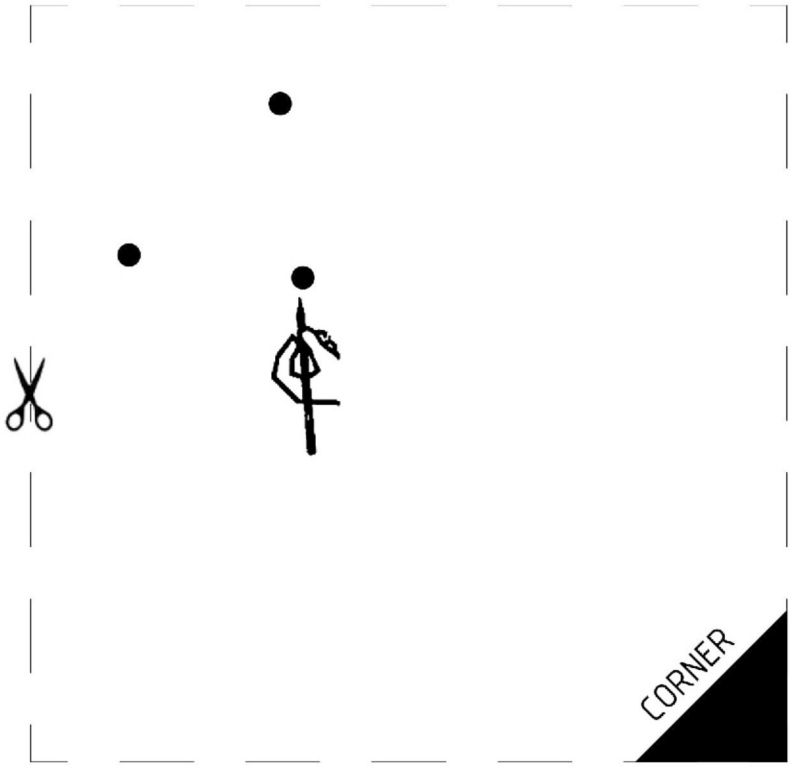
CORNER