INSTRUKCJA MONTAŻU

Mała szafka nocna 30 cm z 2 szufladami

Kolor: Antracyt / Dąb Artisan

Kod produktu: OR10456

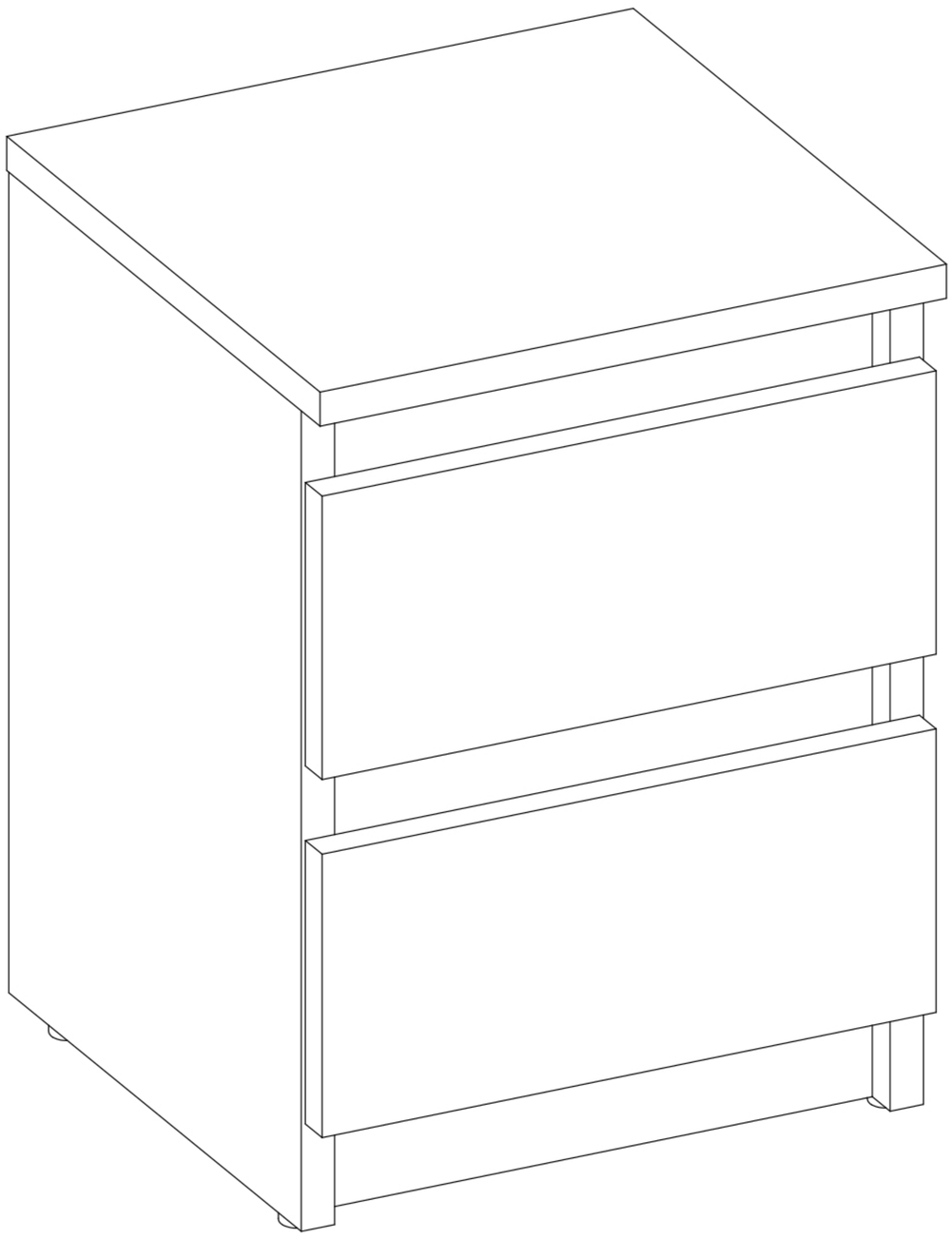

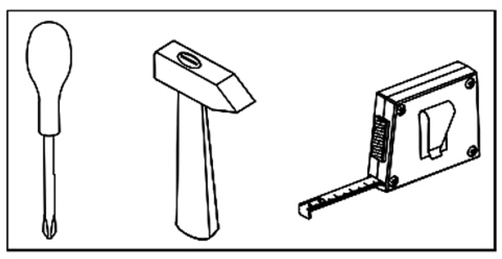

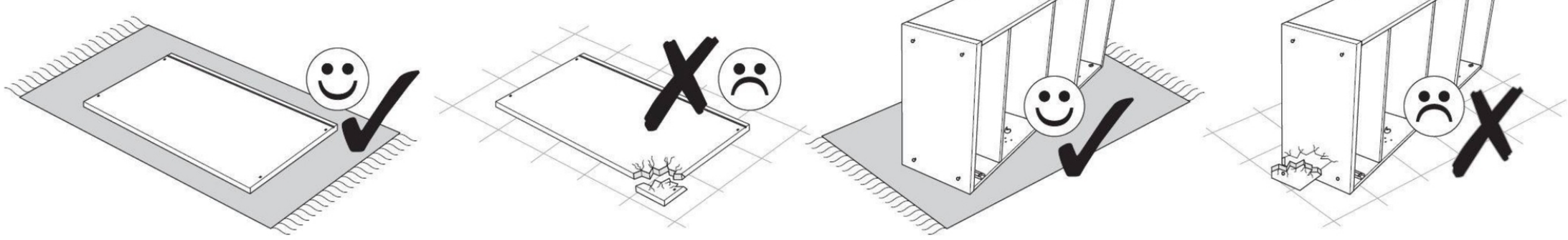

N2 L=34mm **x12**	**M3** 12x15mm **x12**	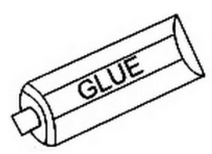 **x1**	**S1** 3,5x16mm **x8**	**E1** ø8x30mm **x4**	**K1** **x1**
T1 **x4**	**Z2** **x20**	**S15** 6x8mm **x8**	**P2** L=250mm **x2**	**M2** x16 ø16mm **x4**	**F2** 7x50mm **x4**

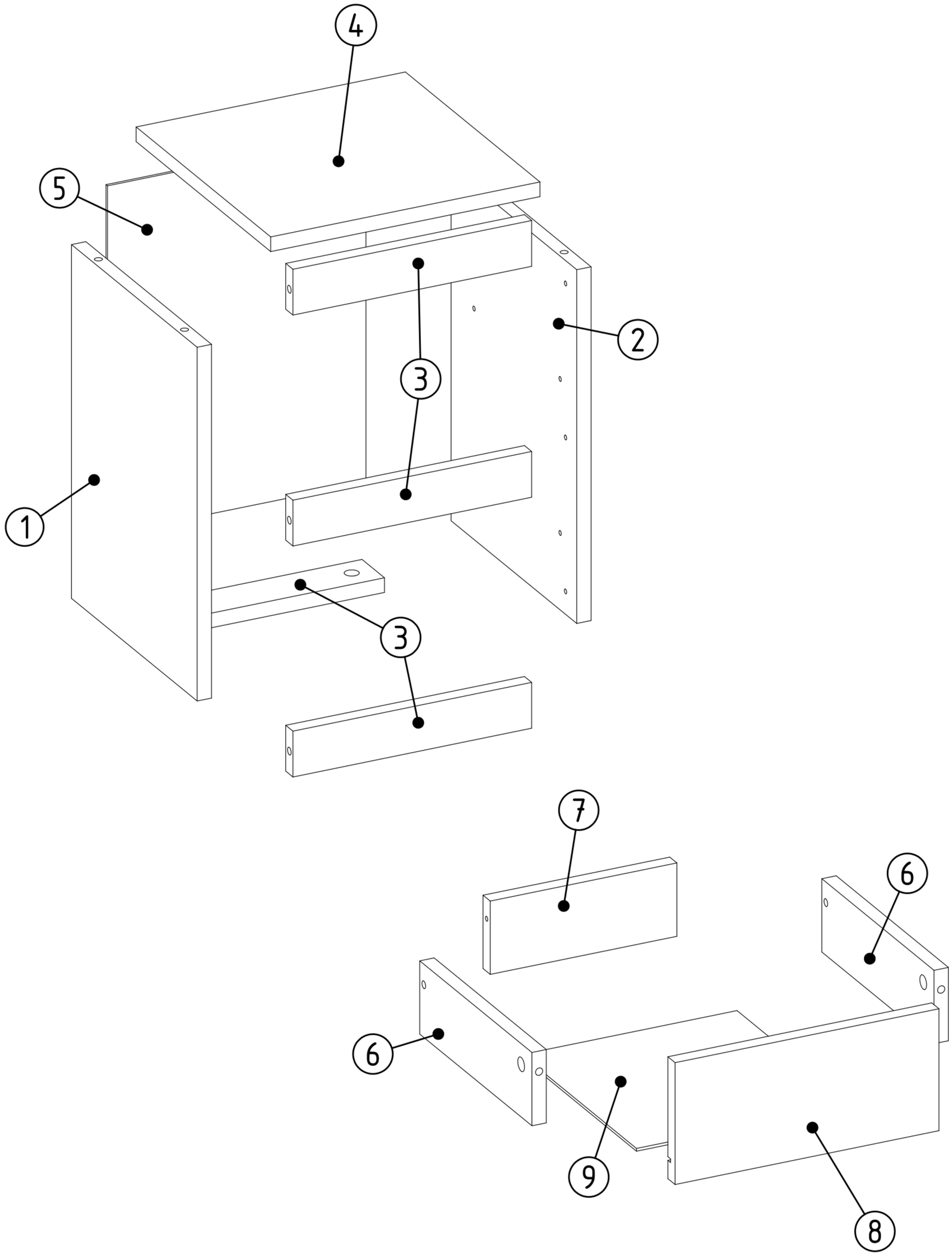

1	x 1
2	x 1
3	x 4
4	x 1
5	x 1
6	x 4
7	x 2
8	x 2
9	x 2

N2		P2	S15	E1	T1
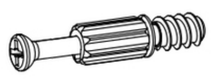	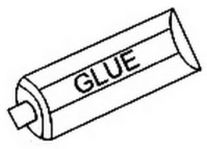	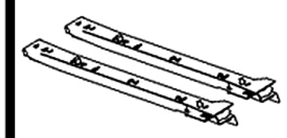	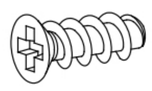	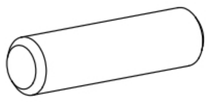	
x4	x1	x2	x4	x2	x2

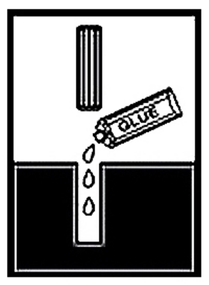

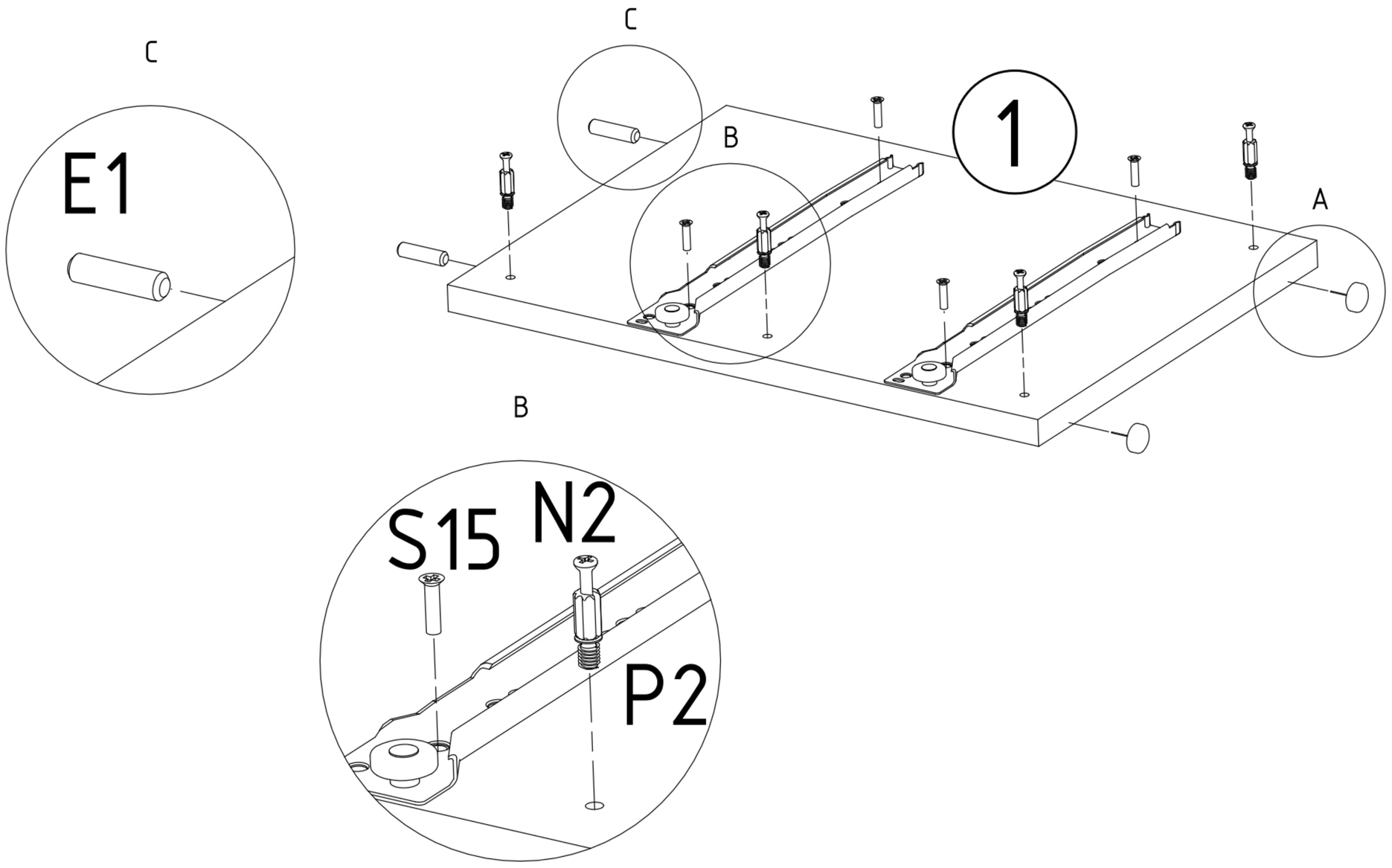

N2		P2	S15	E1	T1
					
x4	x1	x2	x4	x2	x2

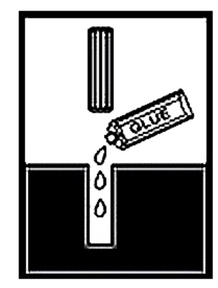

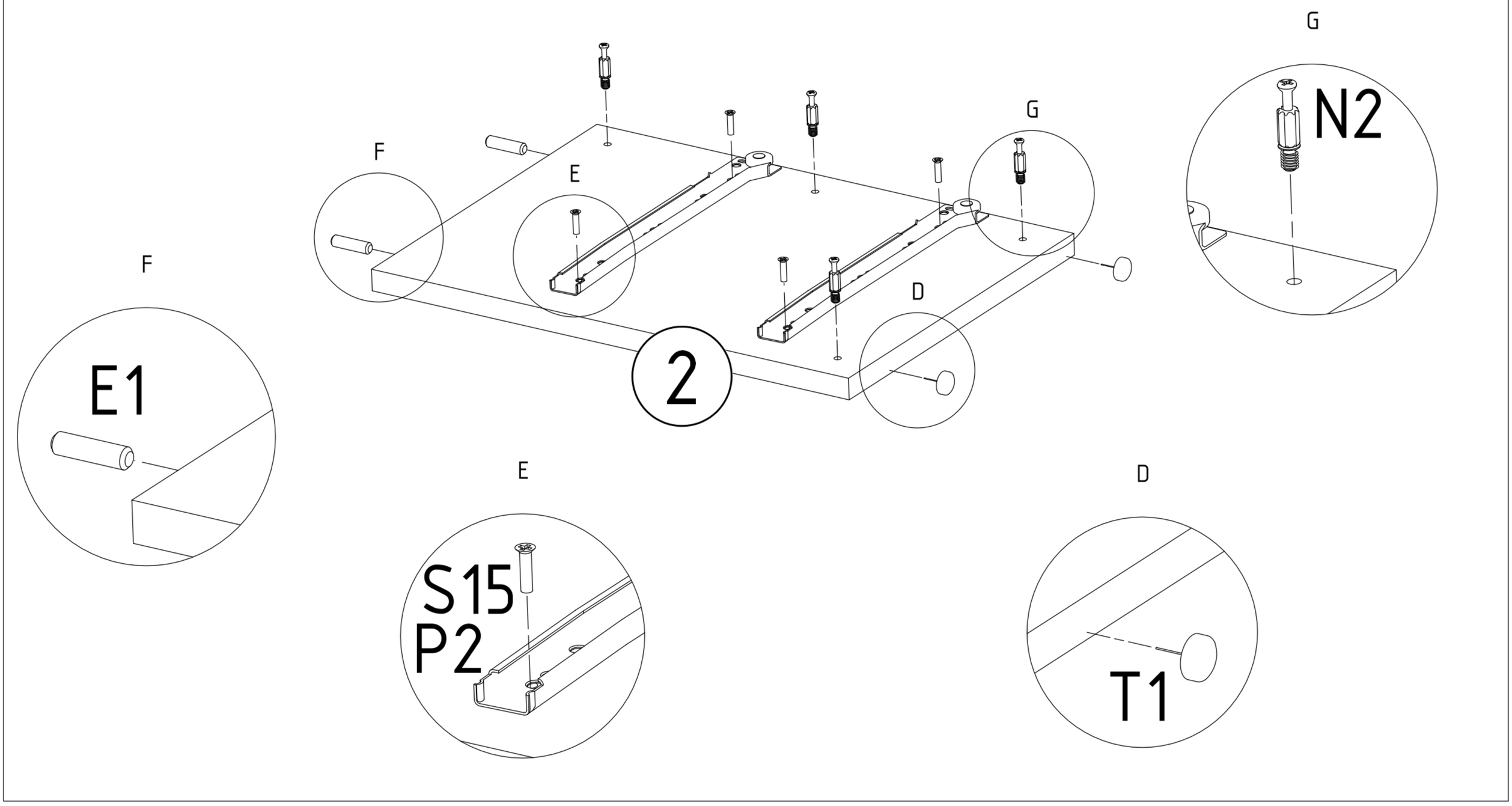

M3

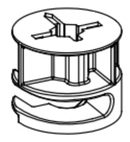

x8

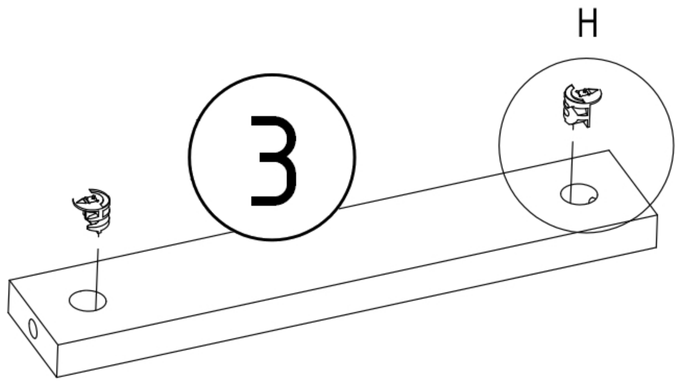

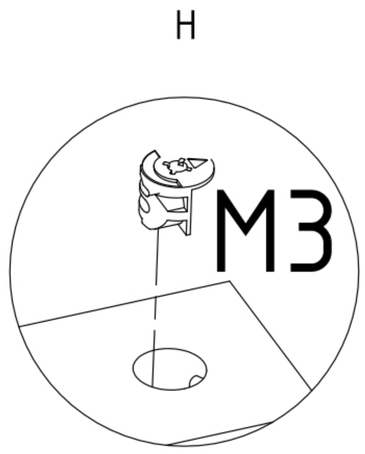

x4

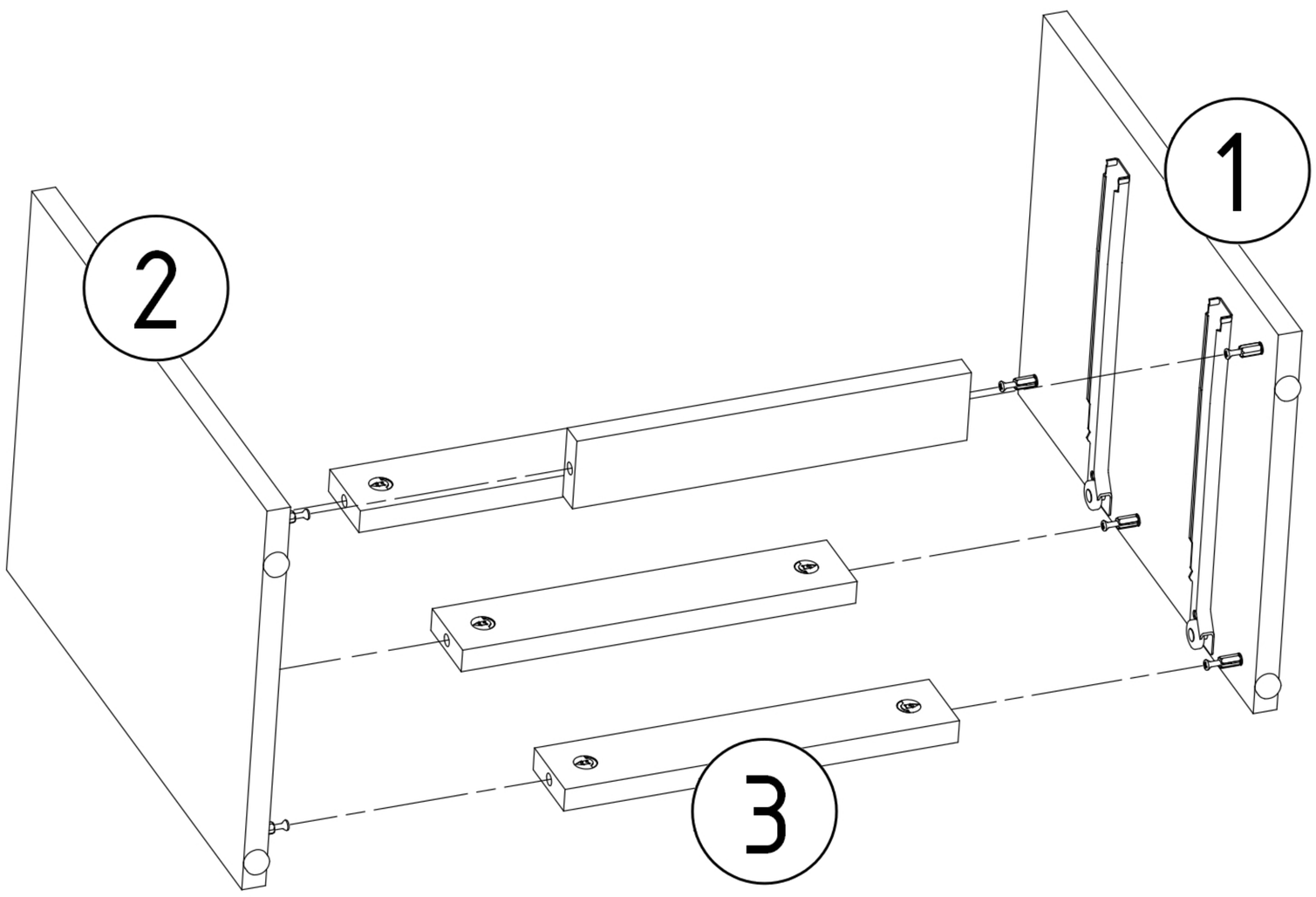

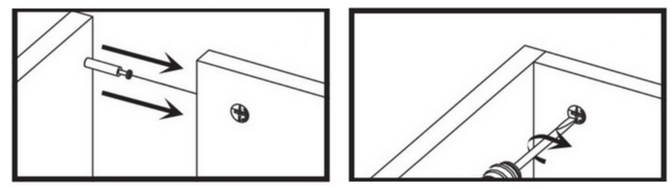

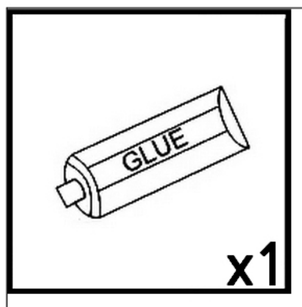
GLUE
x1

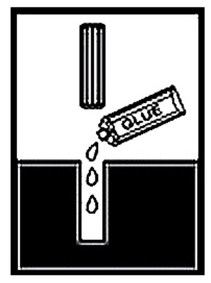
GLUE

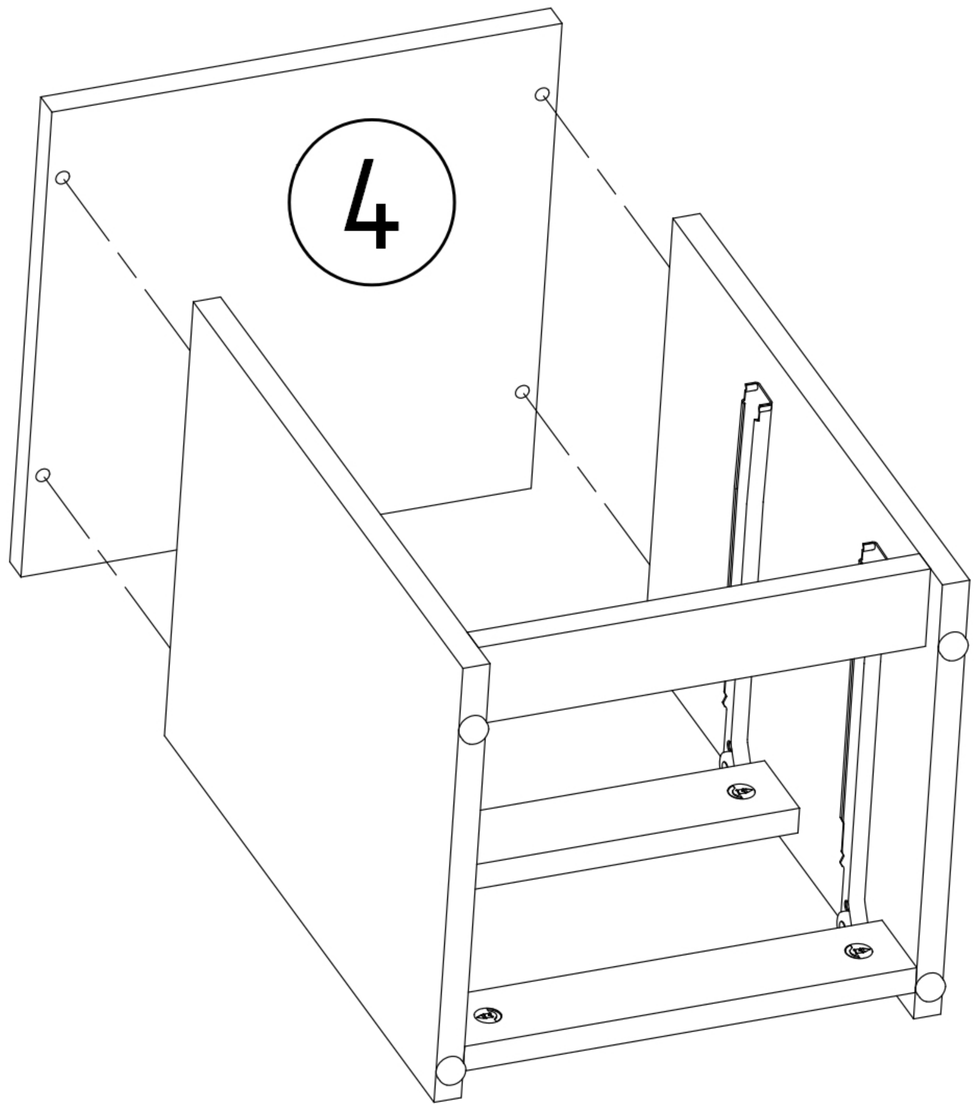
4

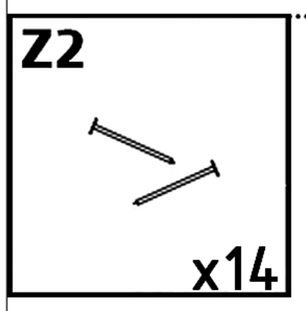
Z2
x14

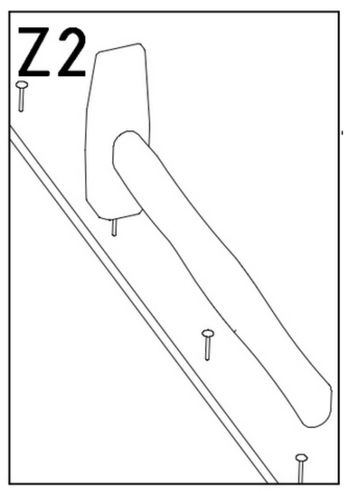
Z2

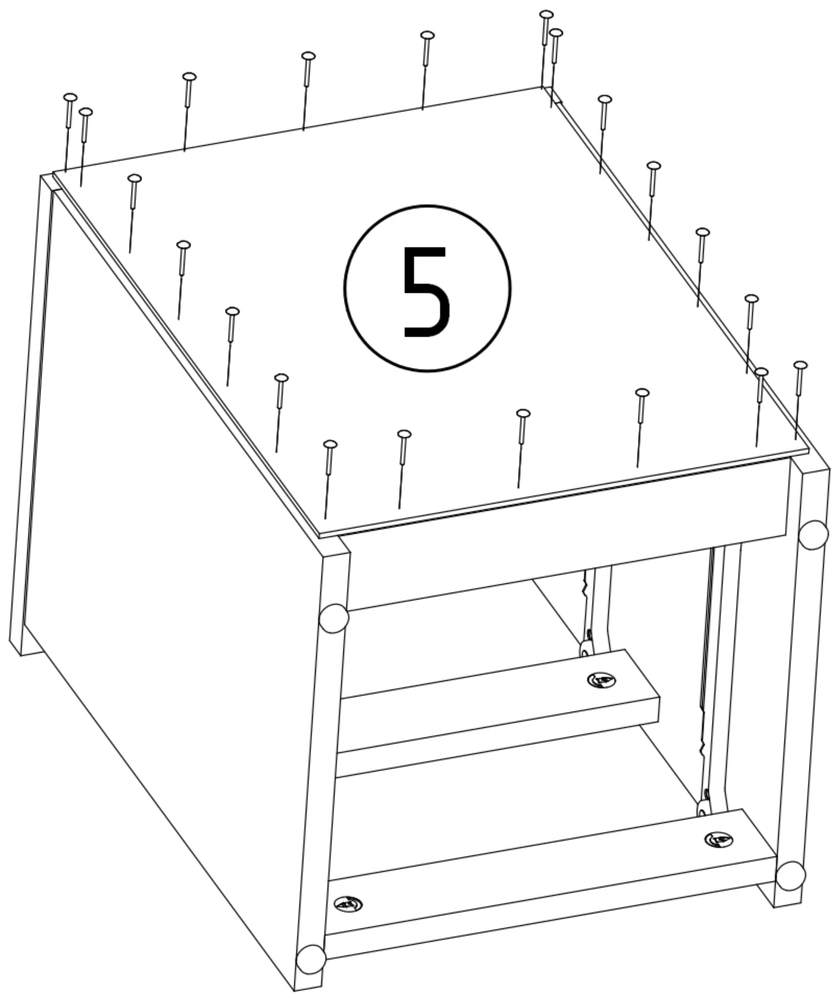
5

M3 x4

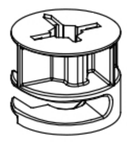

F2 x4

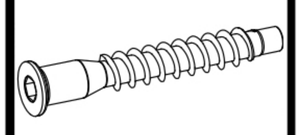

K1 x1

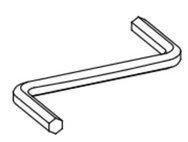

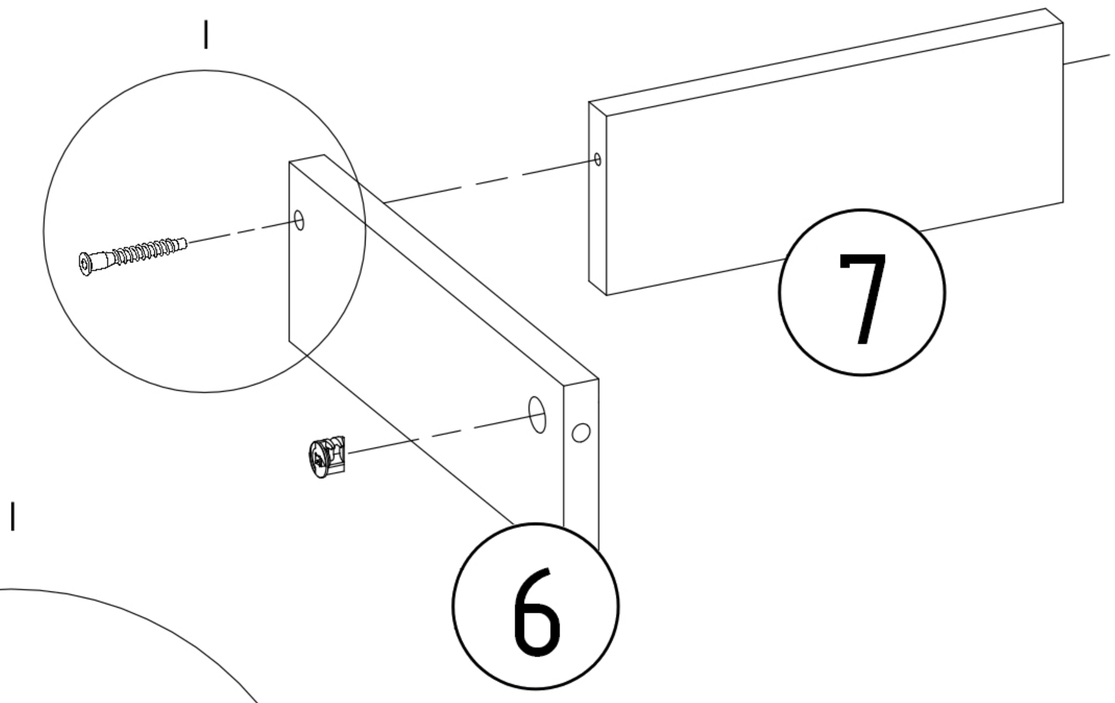

N2 x4

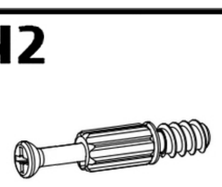

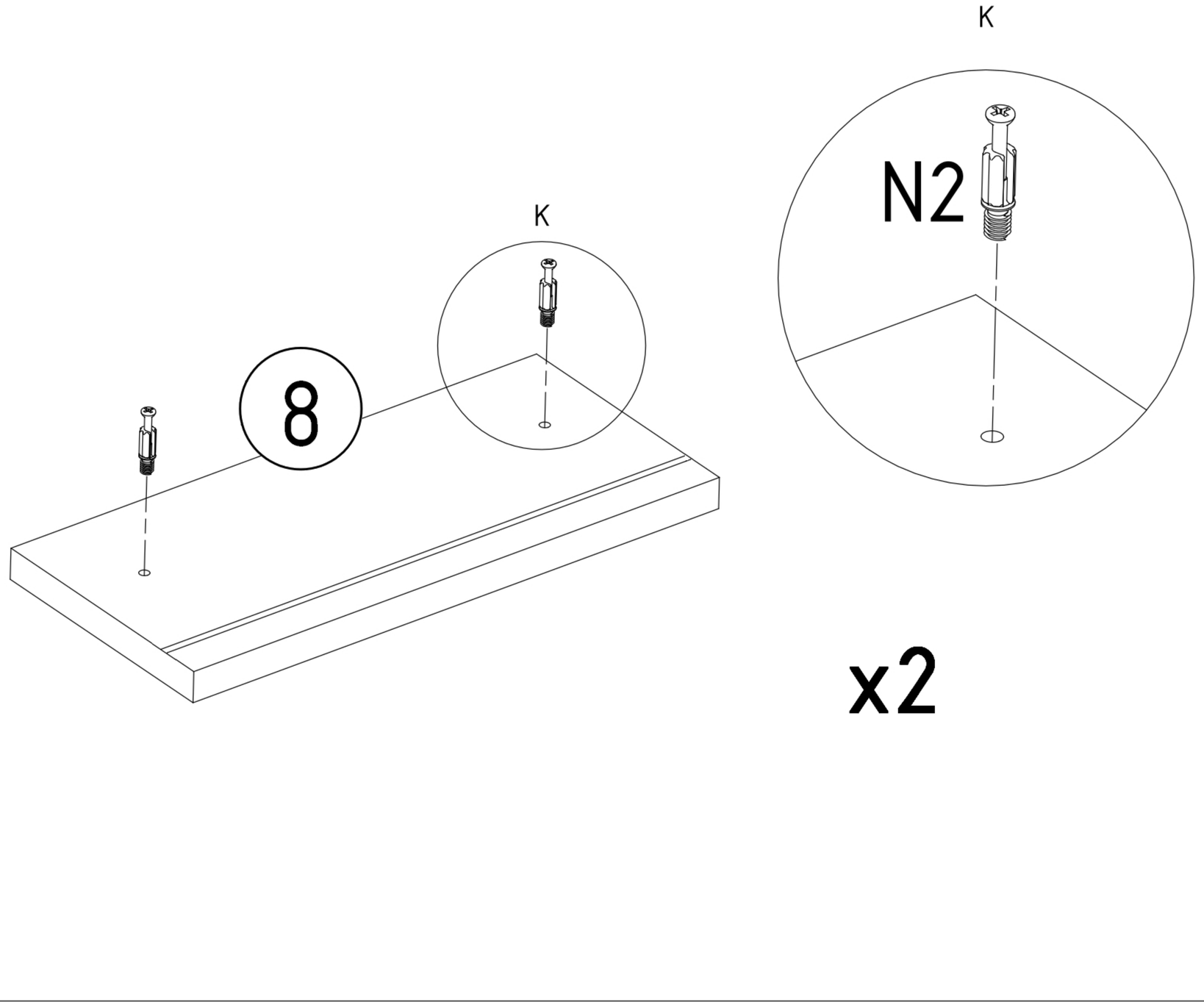

M2

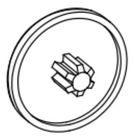

x4

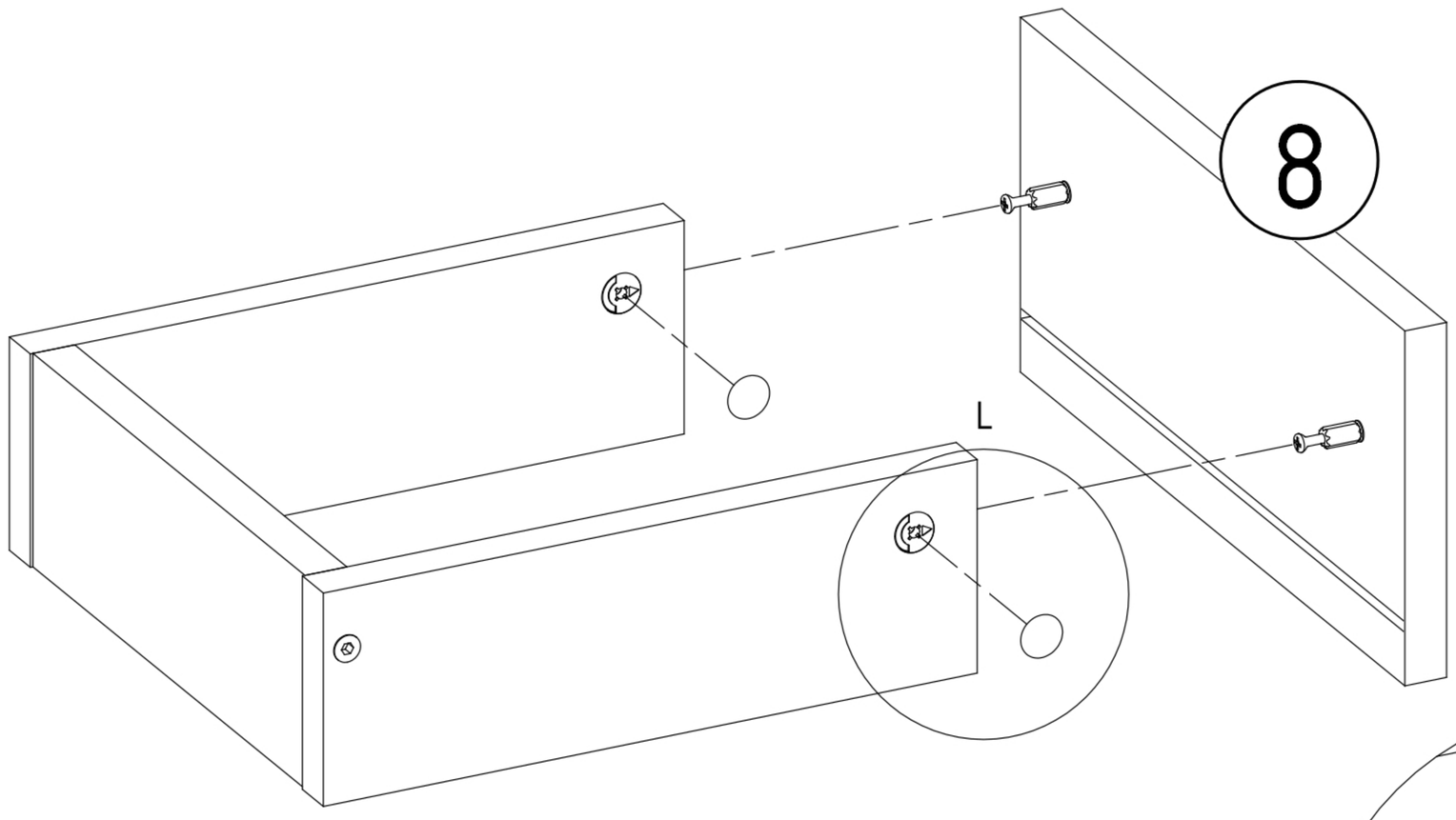

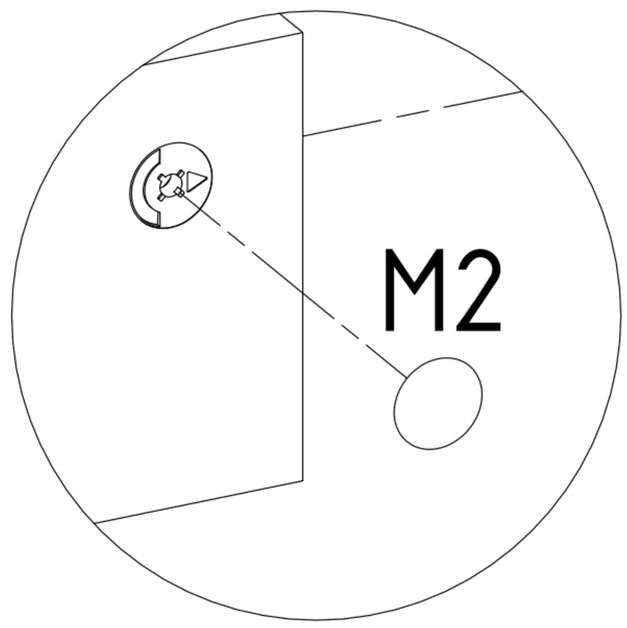

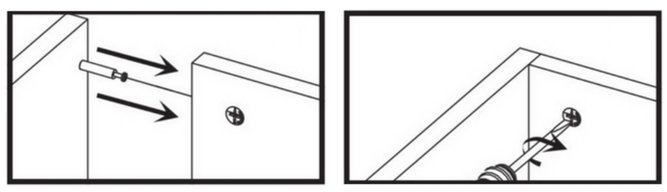

P2

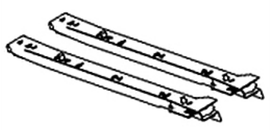

x2

S1



x8

Z2



x6

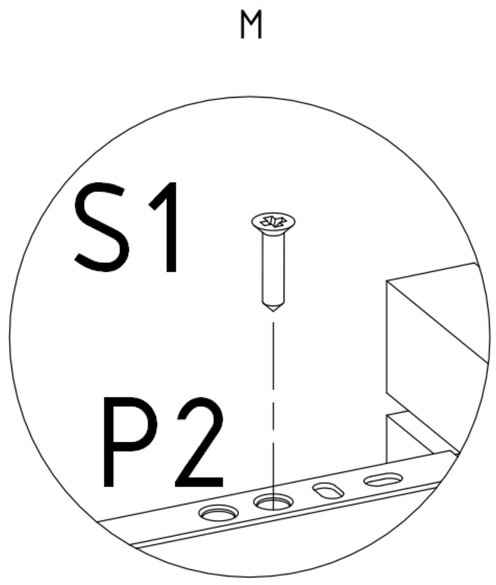

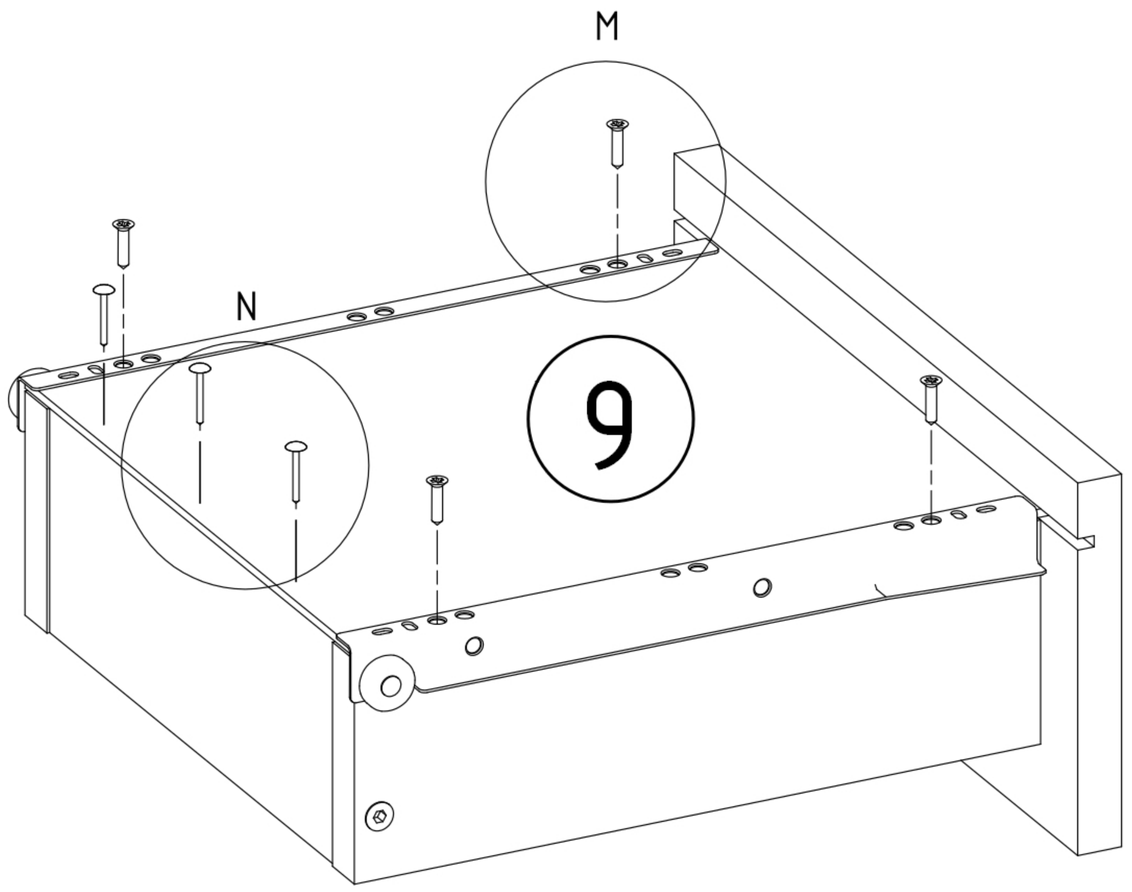

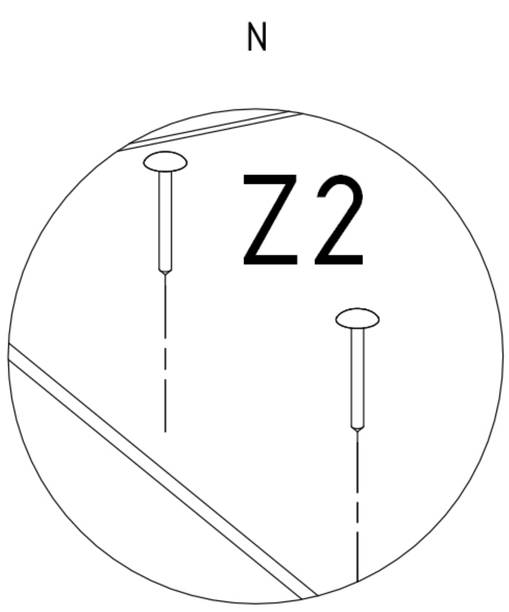

x2

