INSTRUKCJA MONTAŻU

Biurko 143 cm z regałem, szufladą i schowkiem

Kolor: Dąb Artisan

Kod produktu: OR10387

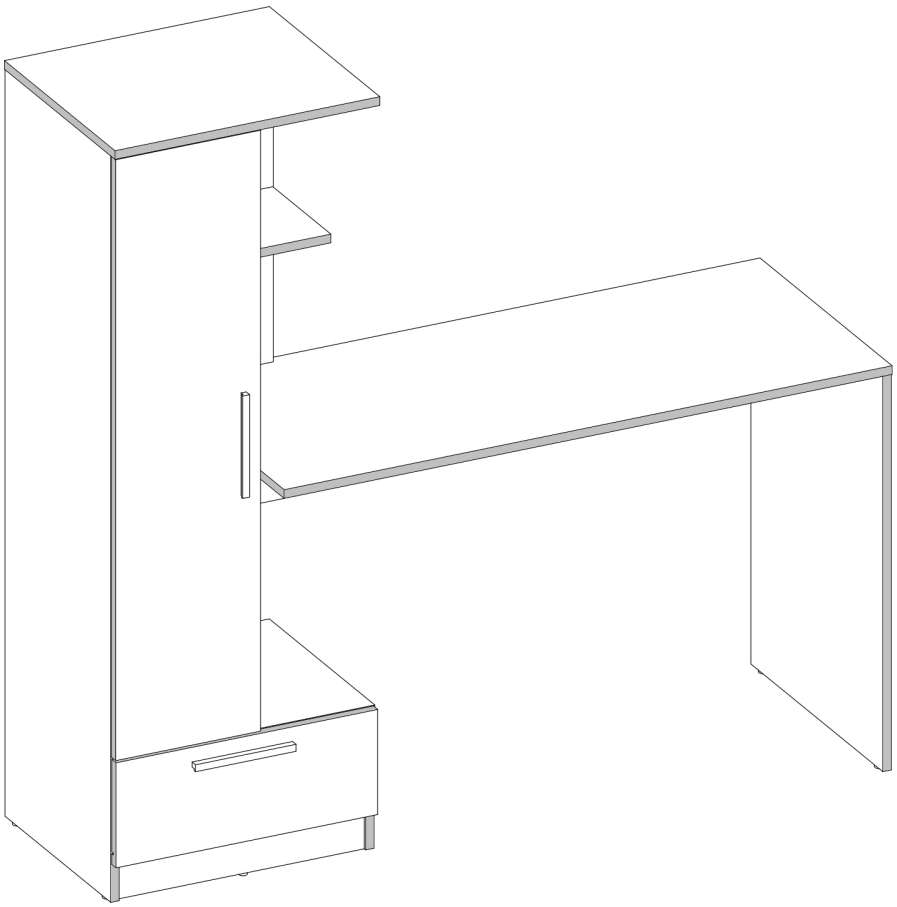

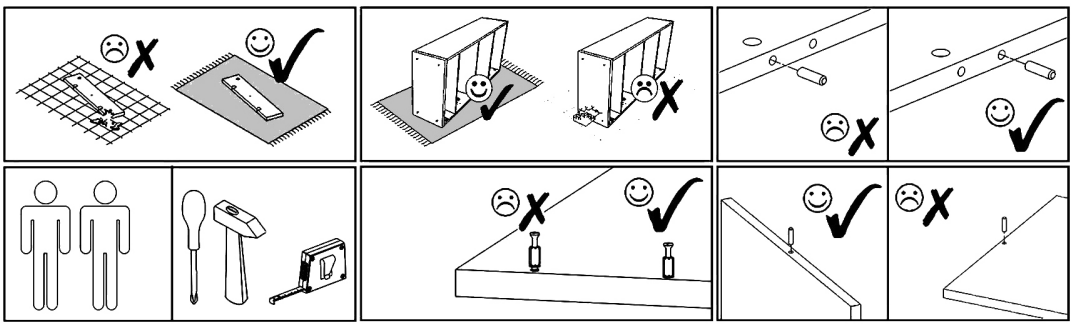

B2 K ø12/4mm x2	U3 CZ L=190/160 x2	V13 x1	V15 x3	V12 GLUE x1

S1 3,5x16mm x8	T1 x7	P3 L=350mm x1	Z1 x50	V16 5x16mm x8	B1 B ø17/4mm x2	B2 B ø12/4mm x2	B2 S-A ø12/4mm x2

M1 12x15mm x16	E1 8x30mm x25	R1 6x8mm x4	F1 7x50mm x14	F3 Hex 4mm x1	A1 ZP x2	N1 L=35mm x16	R7 4x27mm x4

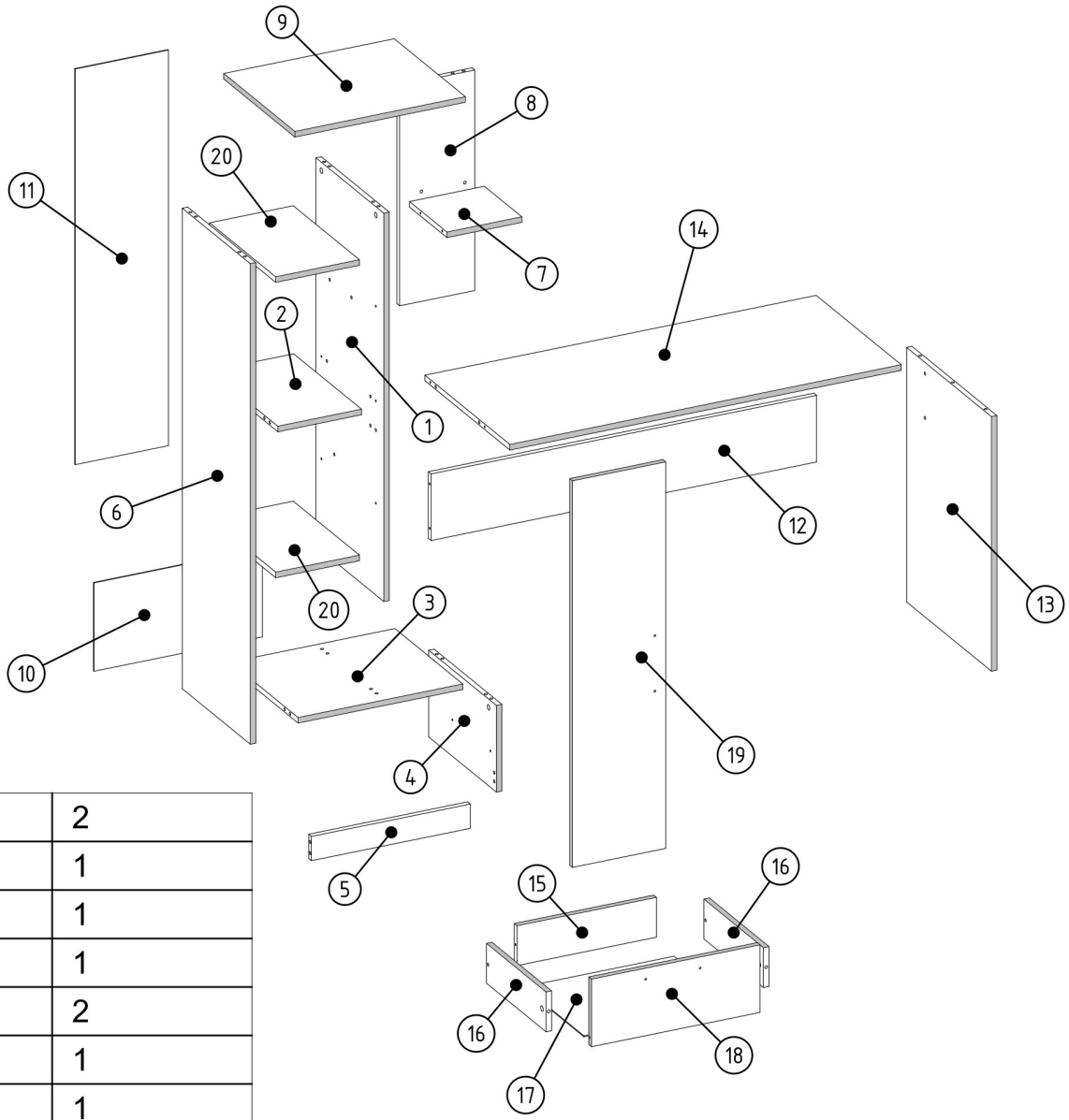

001626	20	2
001633	19	1
001632	18	1
001620	17	1
000053	16	2
001619	15	1
001637	14	1
001628	13	1
001629	12	1
001631	11	1
001630	10	1
001623	9	1
001627	8	1
001622	7	1
001636	6	1
001634	5	1
001635	4	1
001624	3	1
001621	2	1
001625	1	1
ID	NUMBER	QUANTITY

M1	N1	E1	V16
12x15mm x2	L=35mm x2	8x30mm x4	5x16mm x4

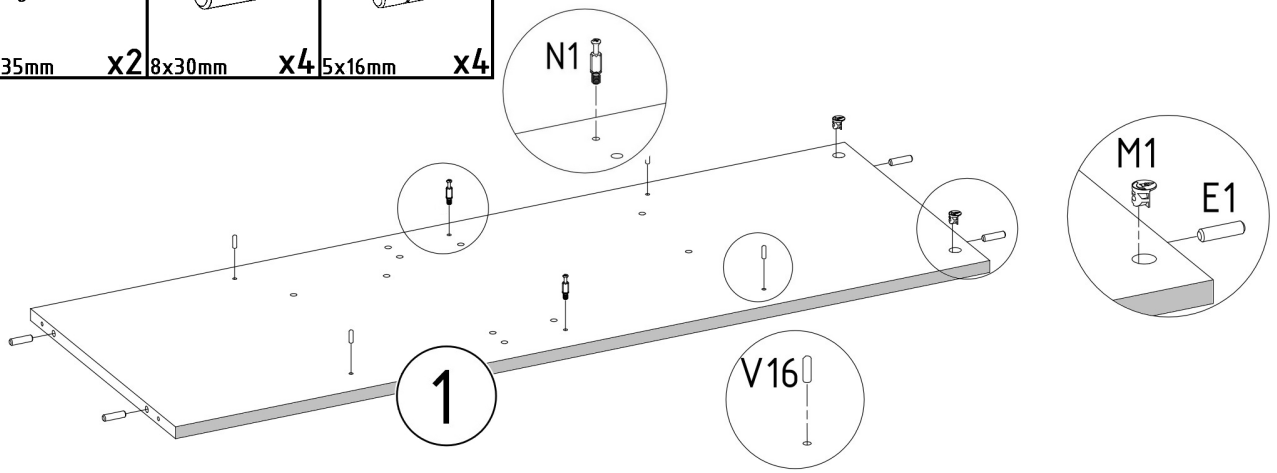

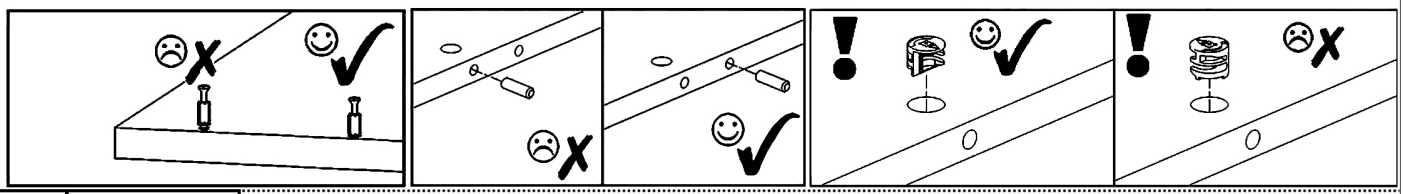

M1	E1
12x15mm x4	8x30mm x4

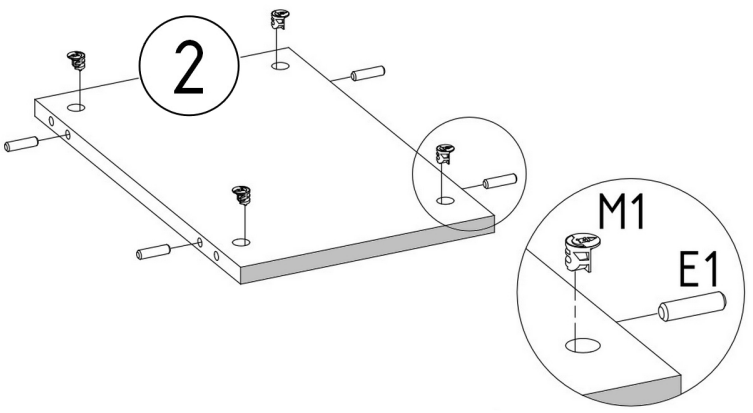

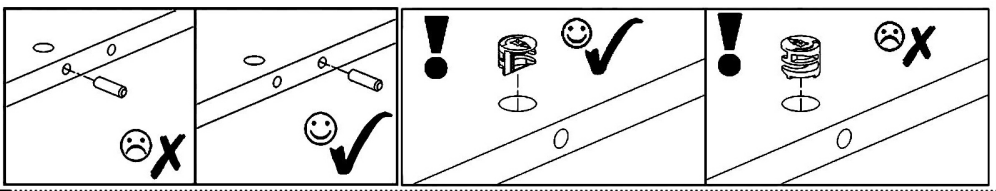

M1	N1	E1
12x15mm x2	L=35mm x2	8x30mm x2

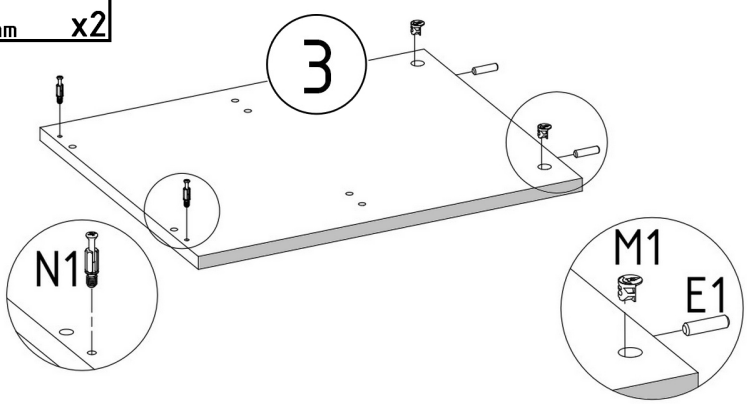

F1	F3
7x50mm x4	Hex 4mm x1

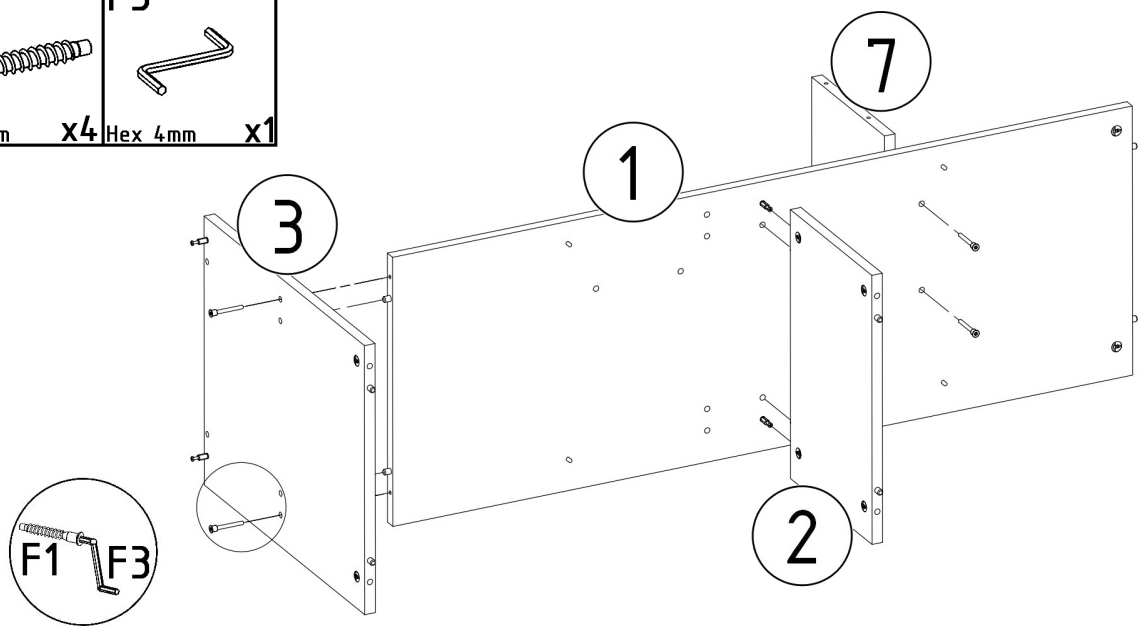

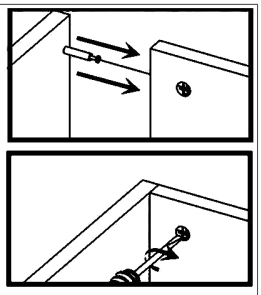

M1	E1	T1	P3	R1
12x15mm x2	8x30mm x2	x2	L=350mm x1	6x8mm x2

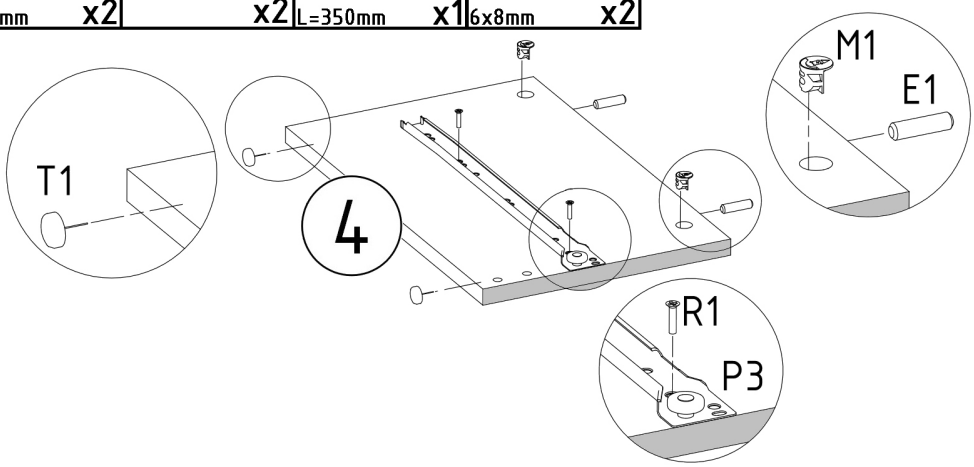

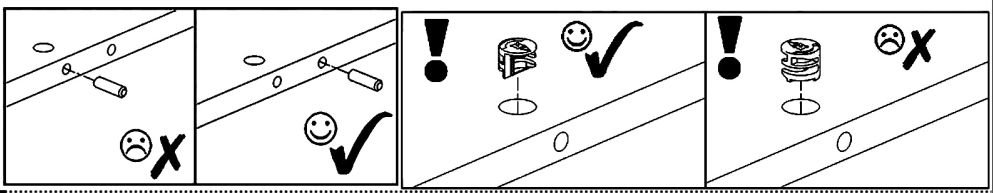

E1	T1	V12
8x30mm x4	x1	GLUE x1

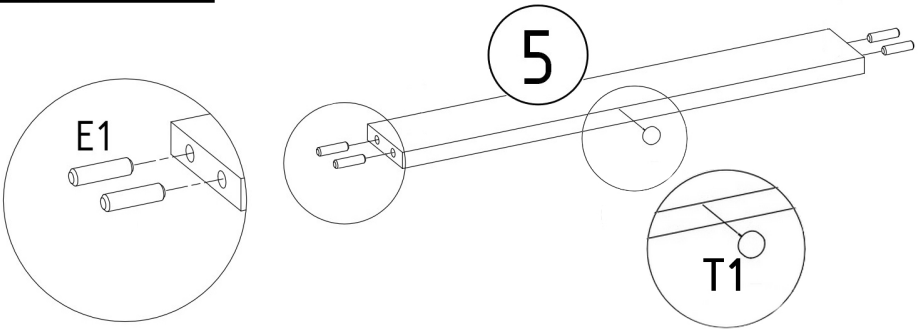

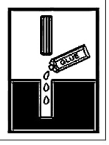

M1	E1
	
12x15mm x2	8x30mm x2

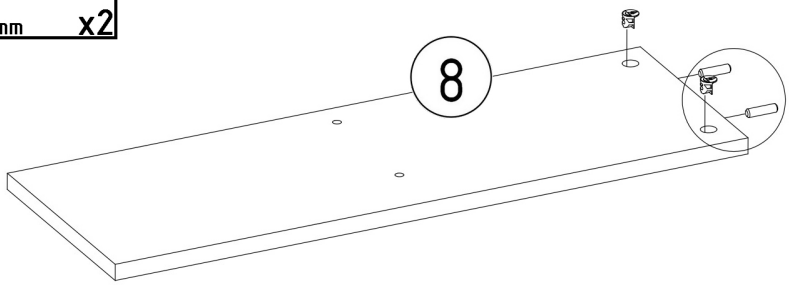

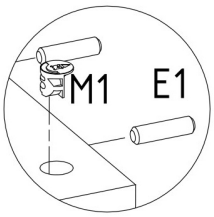

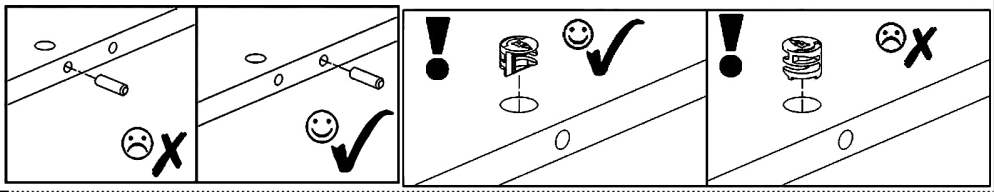

F1	F3	V12
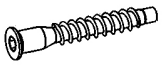	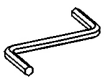	
7x50mm x2	Hex 4mm	

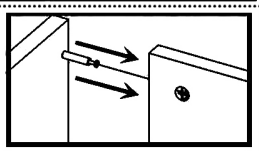

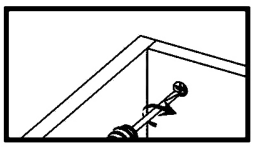

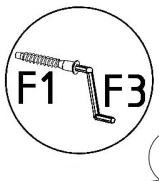

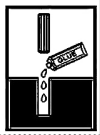

N1

L=35mm x6

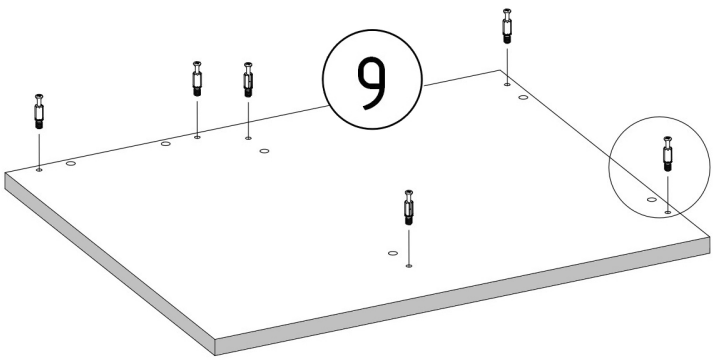

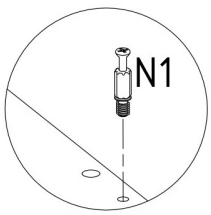

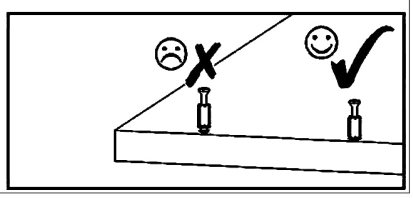

M1	E1	T1	N1	V16	P3	R1
12x15mm x2	8x30mm x2	x2	L=35mm x4	5x16mm x4	L=350mm x1	6x8mm x2

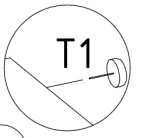

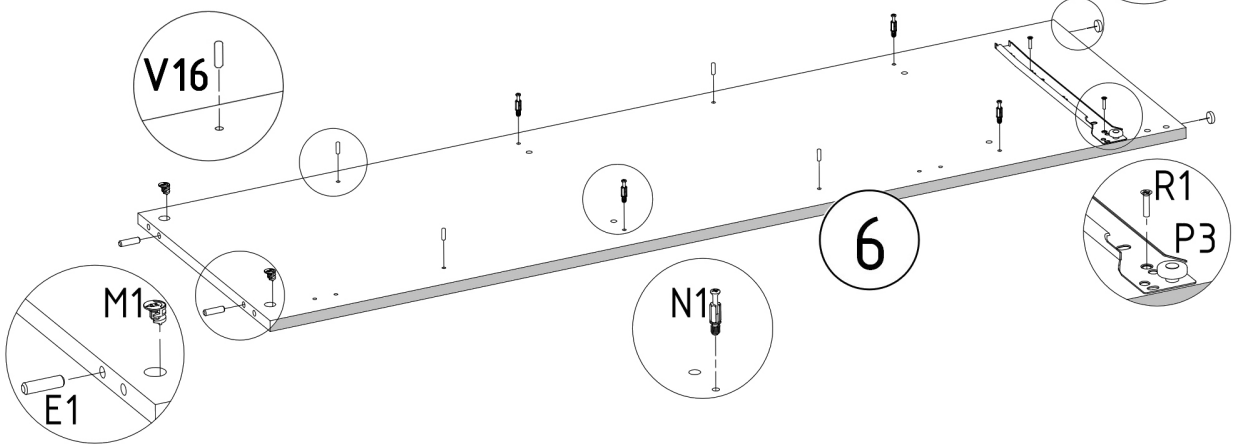

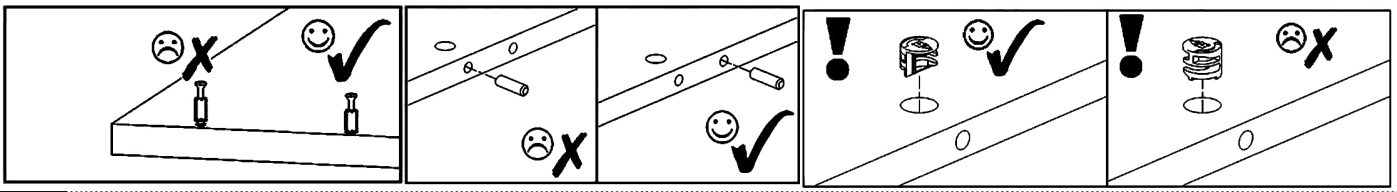

V12

GLUE

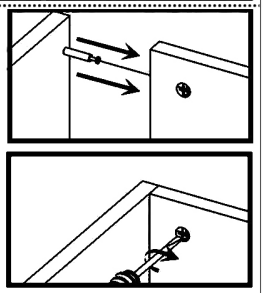

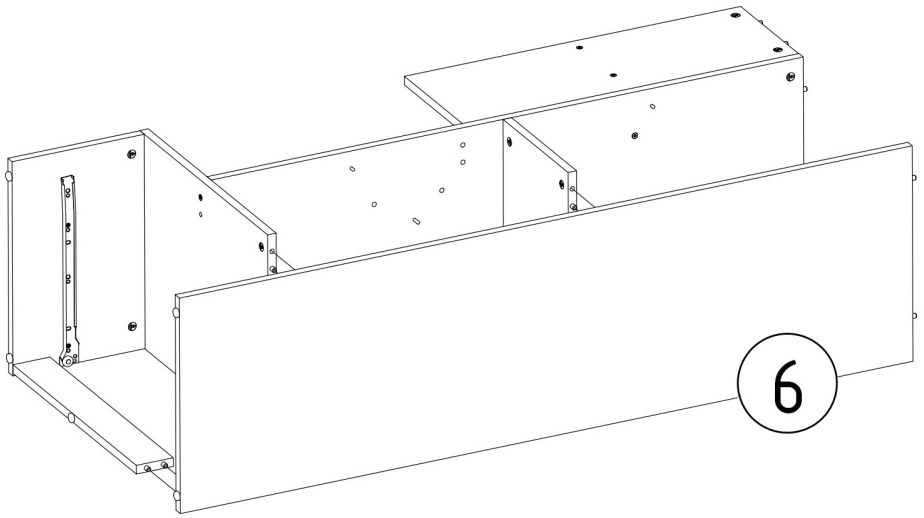

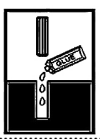

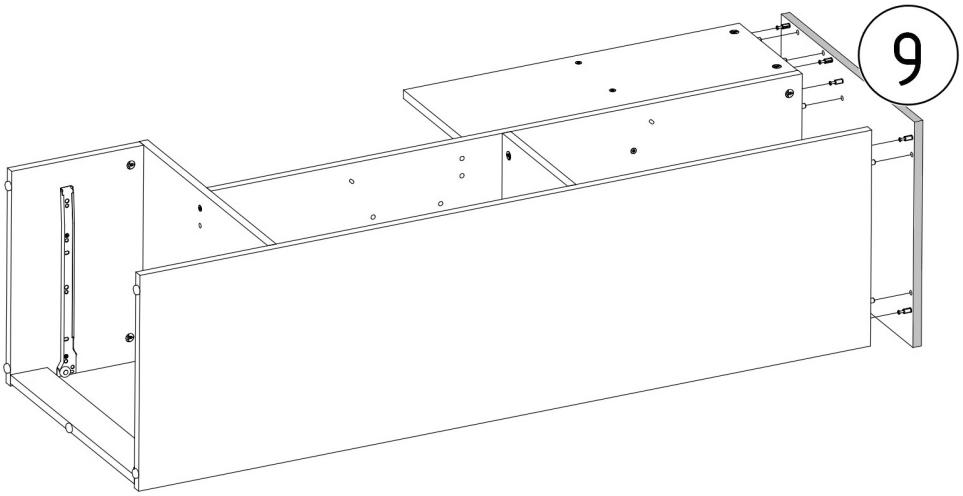

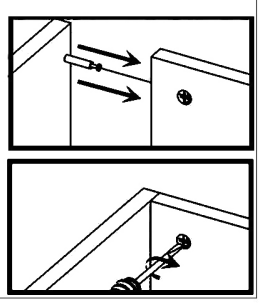

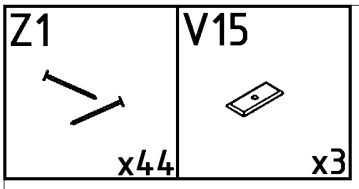
Z1
x44
V15
x3

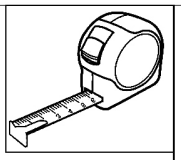

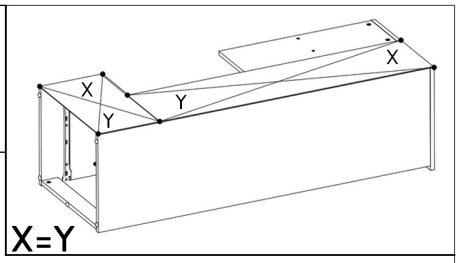
X
Y
Y
X
X=Y

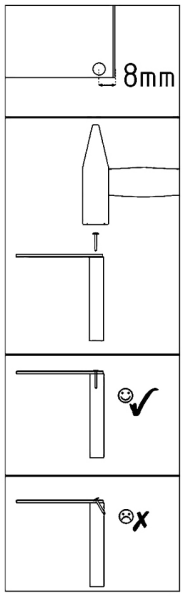
8mm

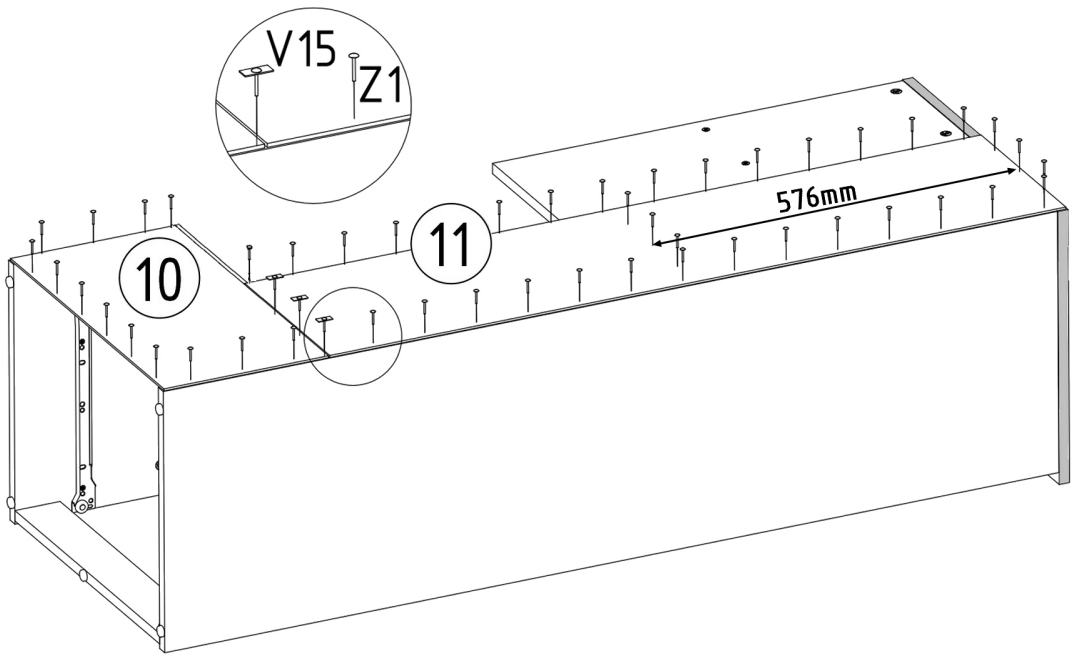
V15
Z1
10
11
576mm

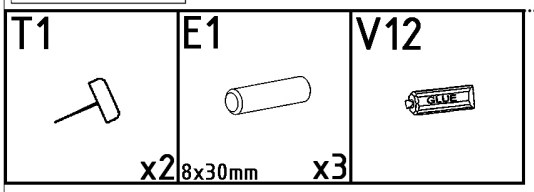
T1
x2
E1
8x30mm
x3
V12
GLUE

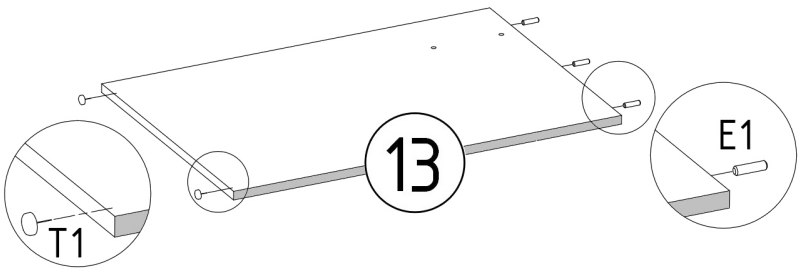
13
T1
E1

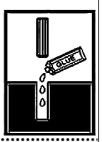
GLUE

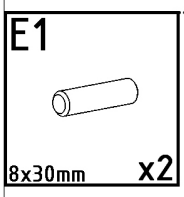
E1
8x30mm
x2

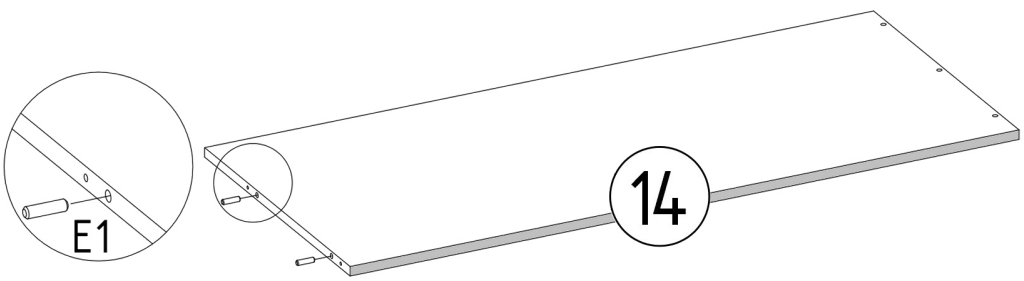
E1
14

F1

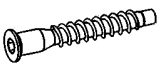

7x50mm x4

F3

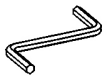

Hex 4mm

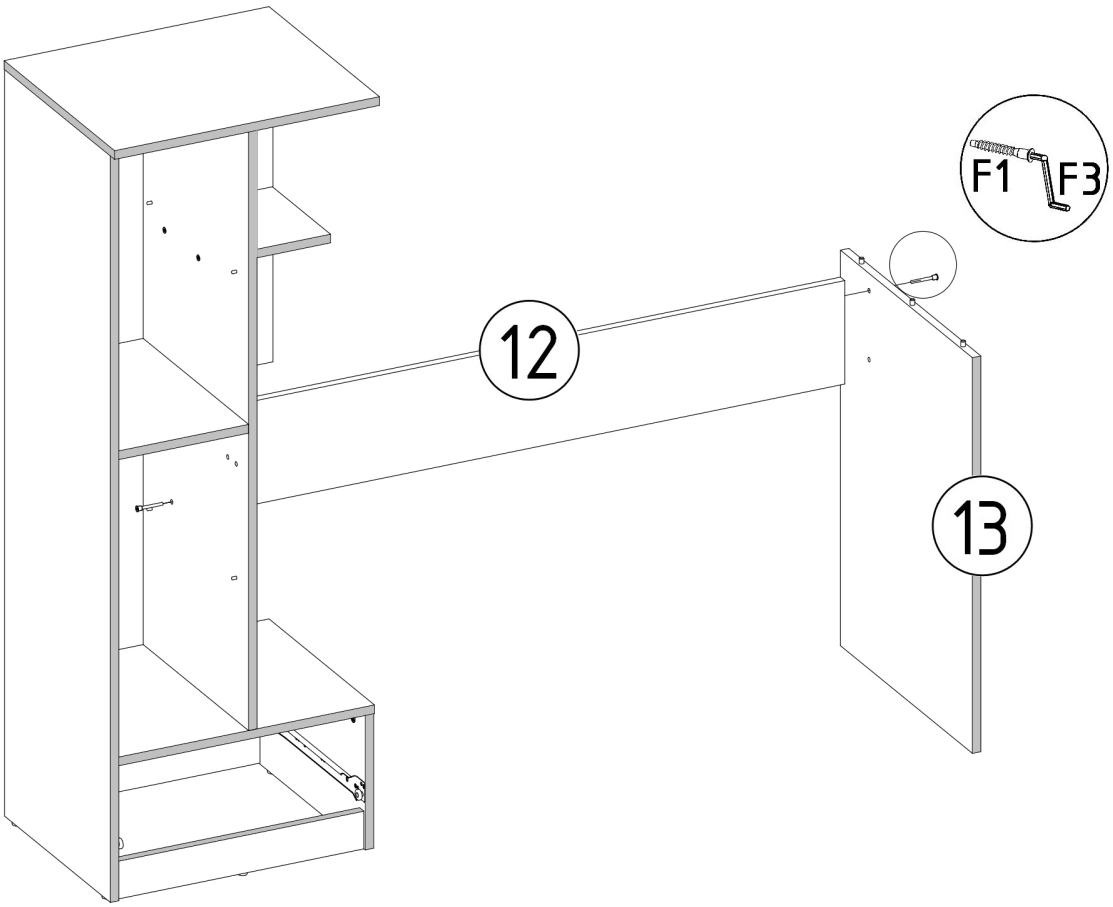

F1

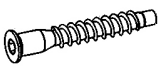

7x50mm x2

F3

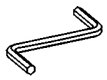

Hex 4mm

V12



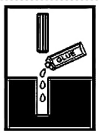

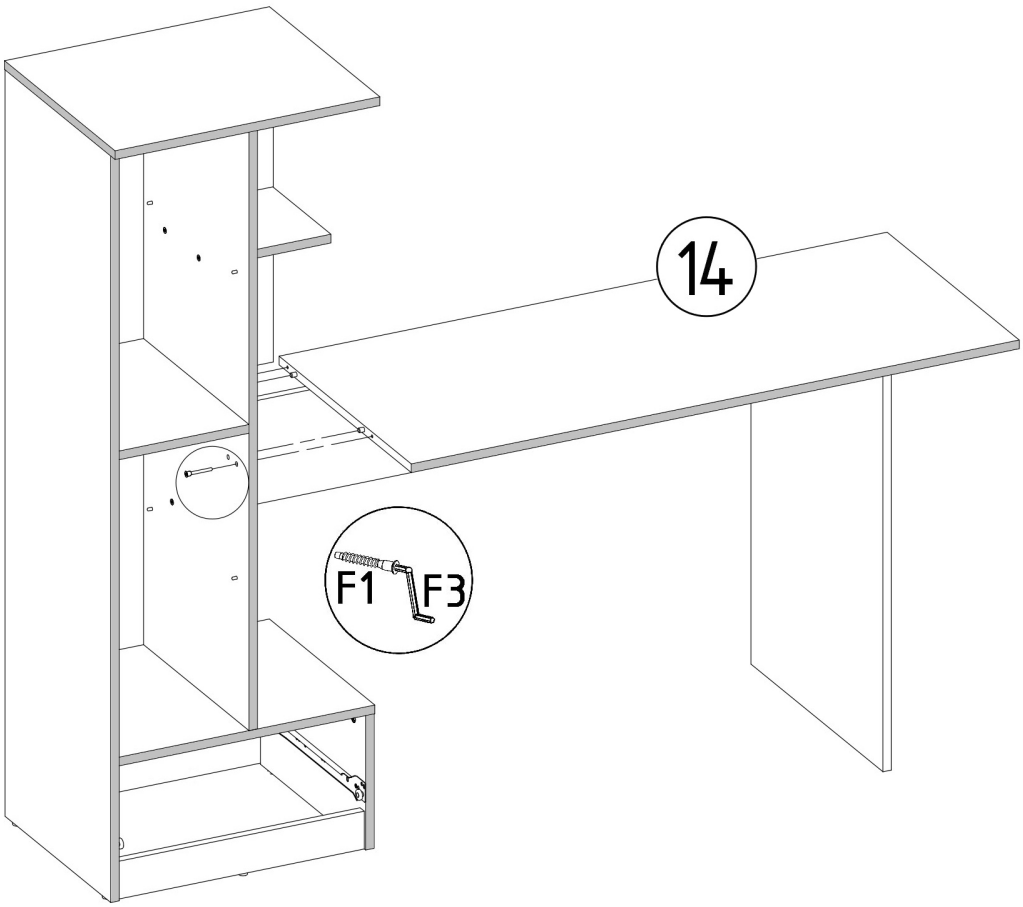

N1



L=35mm x2

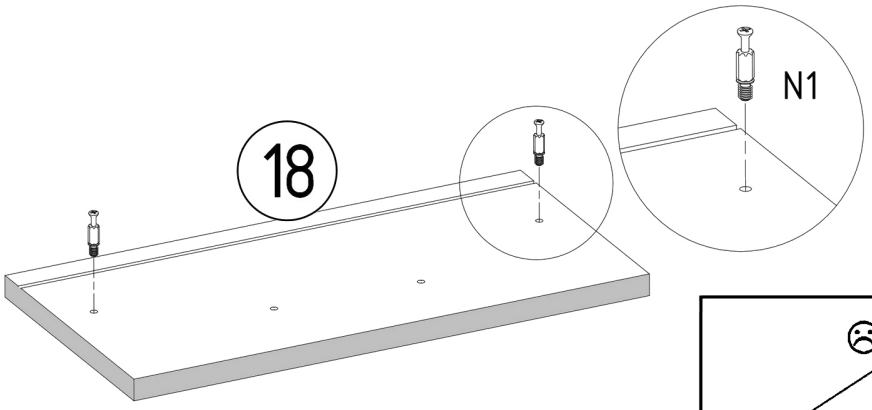

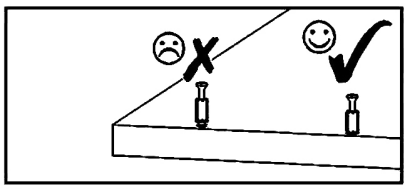

M1



12x15mm x2

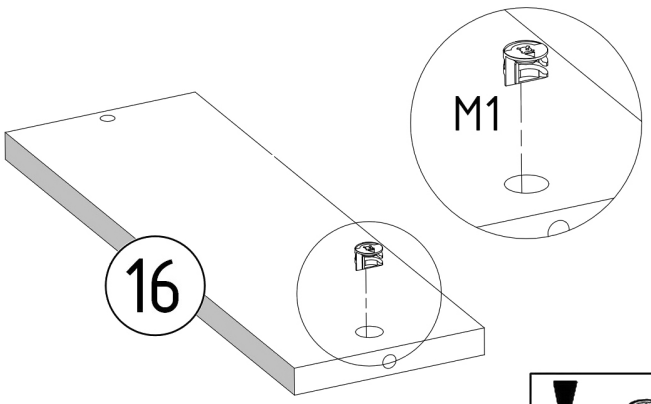

x2

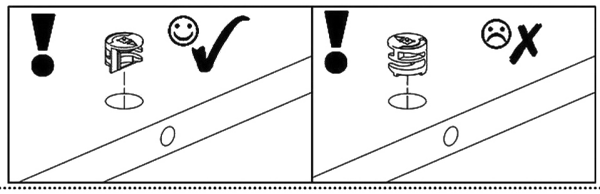

F1

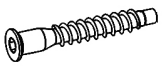

7x50mm x2

F3

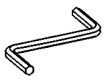

Hex 4mm

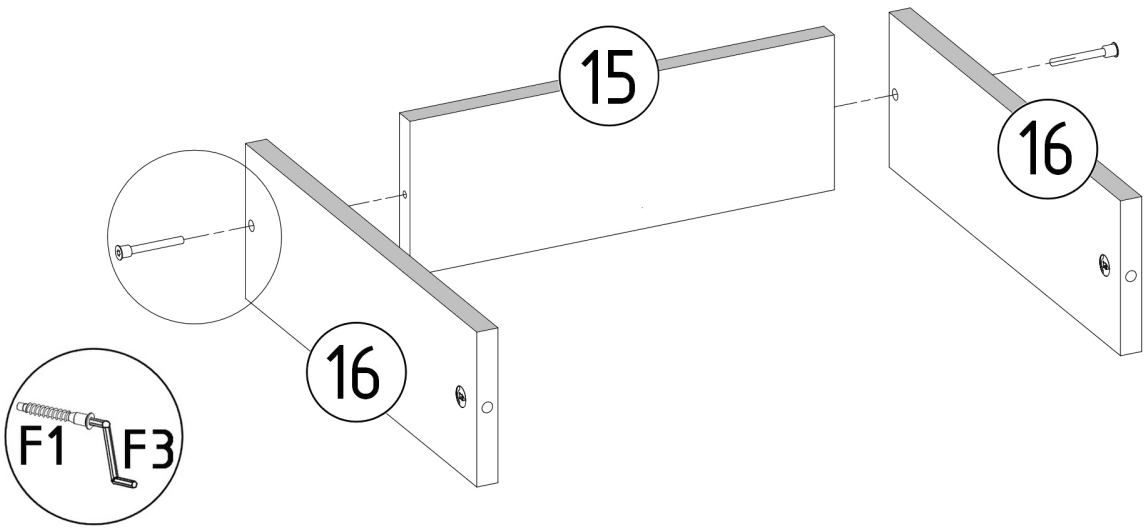

B1



ø17/4mm x2

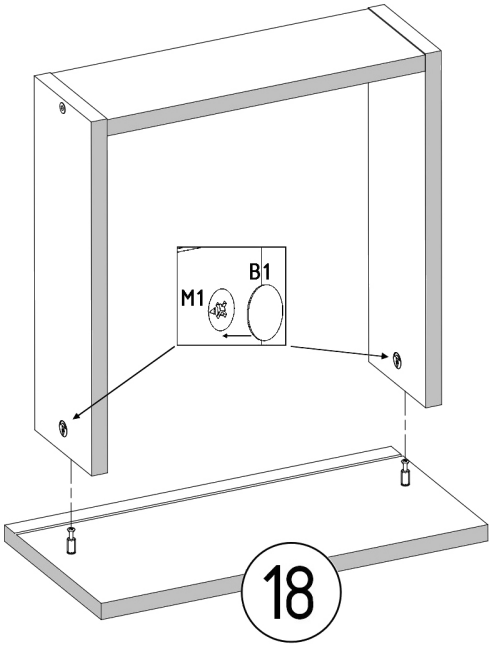

1.

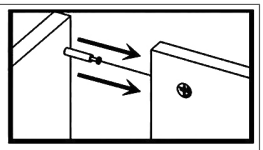

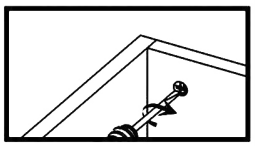

2.

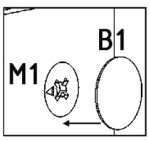

Z1



x6

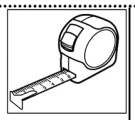

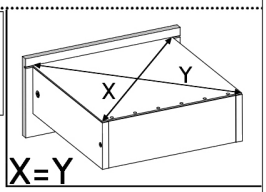

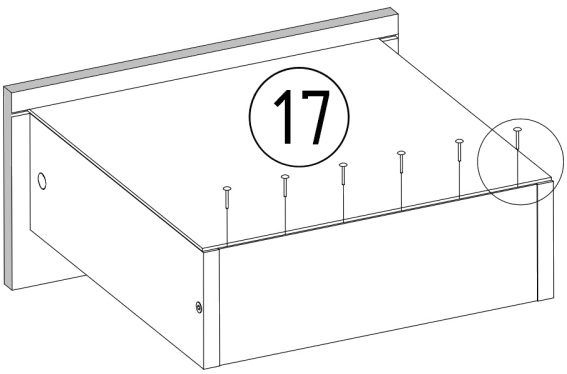

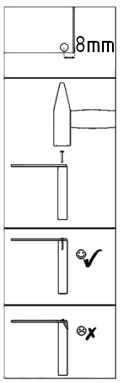

S1



3,5x16mm x4

P3

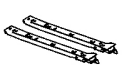

L=350mm x1

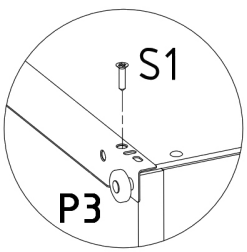

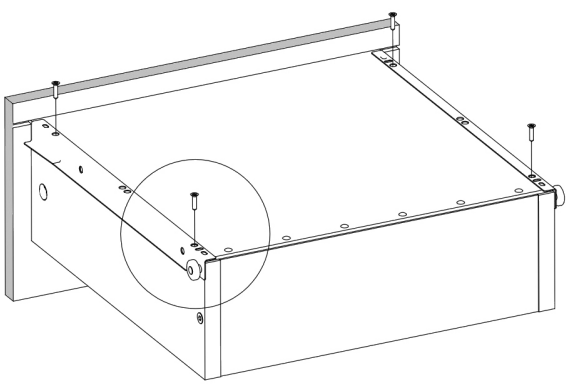

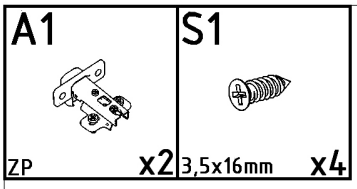
A1
ZP
x2
S1
3,5x16mm
x4

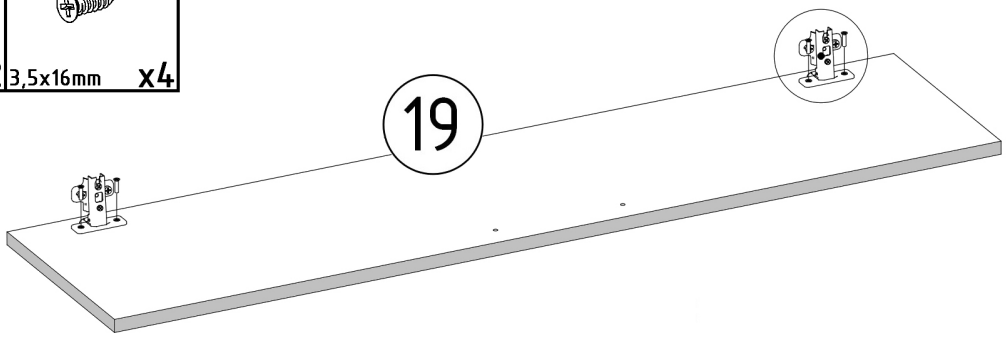
19

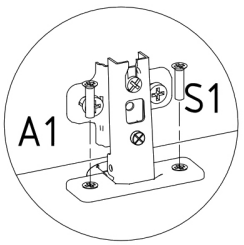
A1
S1

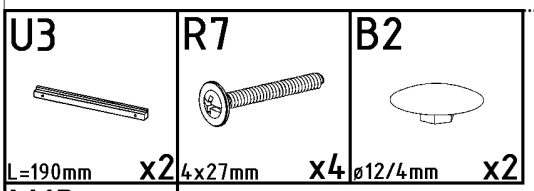
U3
L=190mm
x2
R7
4x27mm
x4
B2
ø12/4mm
x2

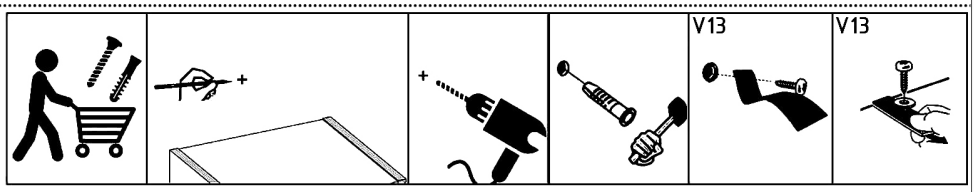
V13
V13

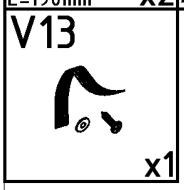
V13
x1

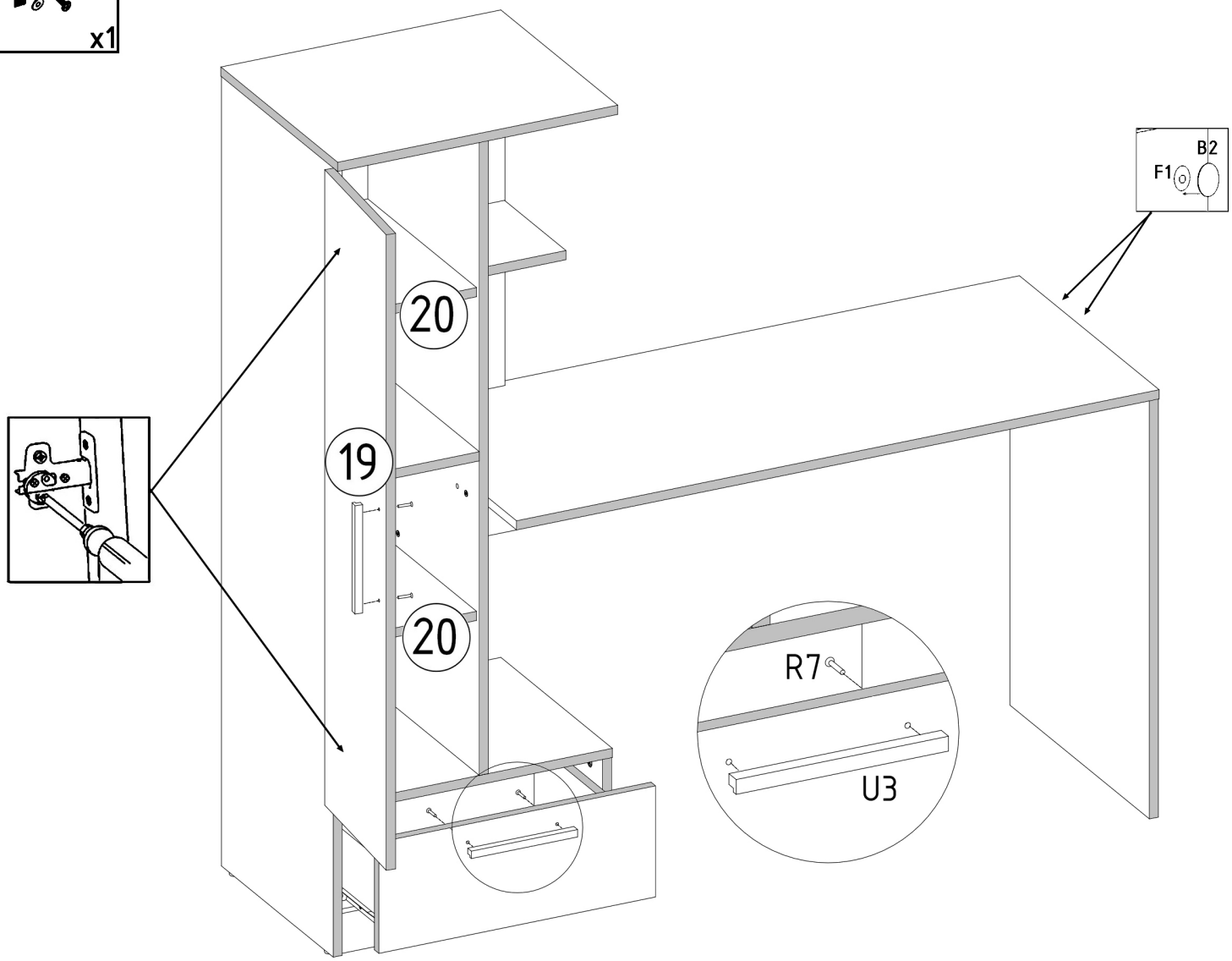
B2
F1
20
19
20
R7
U3

