INSTRUKCJA MONTAŻU

Wąska szafa 50 cm z drzwiami TIP-ON, 180 cm

Kolor: Dąb Sonoma

Kod produktu: OR10169

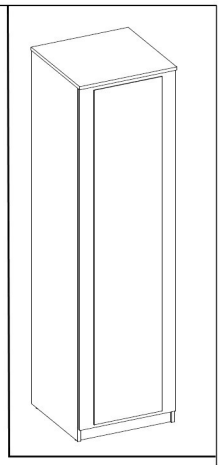

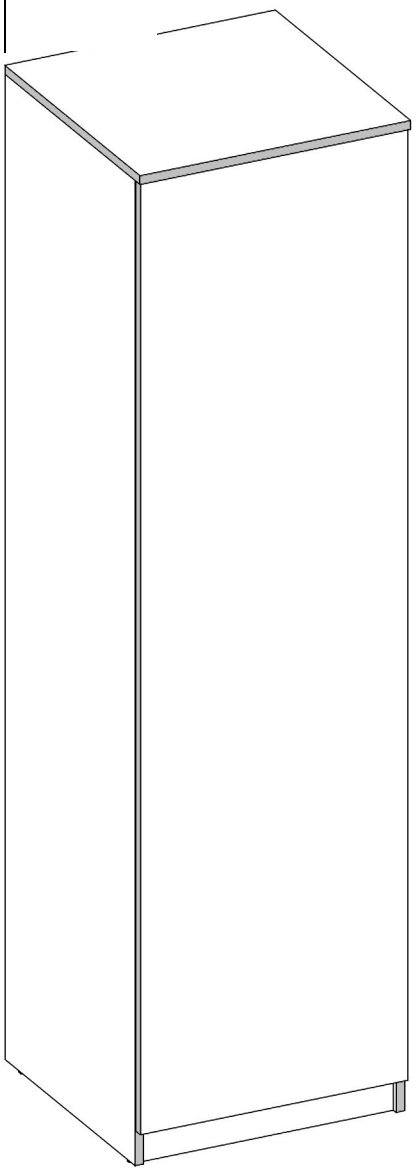

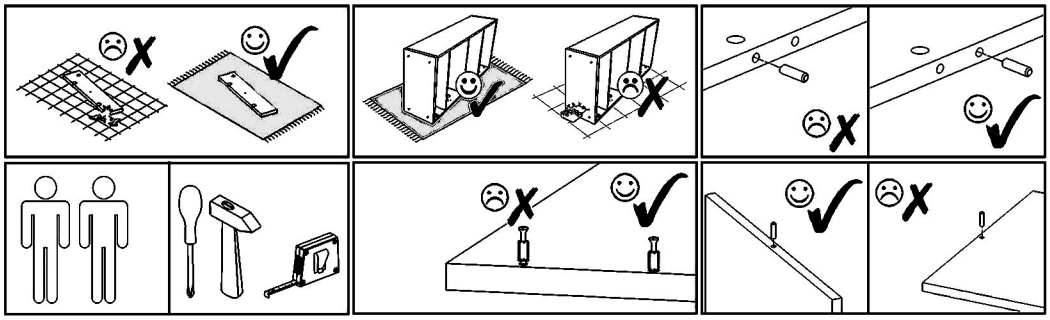

T1 x5	Z1 x80	A1 ZP x3	E1 8x30mm x16	V7 x1	V8 L=455mm x1	
M1 12x15mm x12	N1 L=35mm x12	V13 x1	S1 3,5x16mm x6	R1 6x8mm x2	V19 x2	V16 5x16mm x16

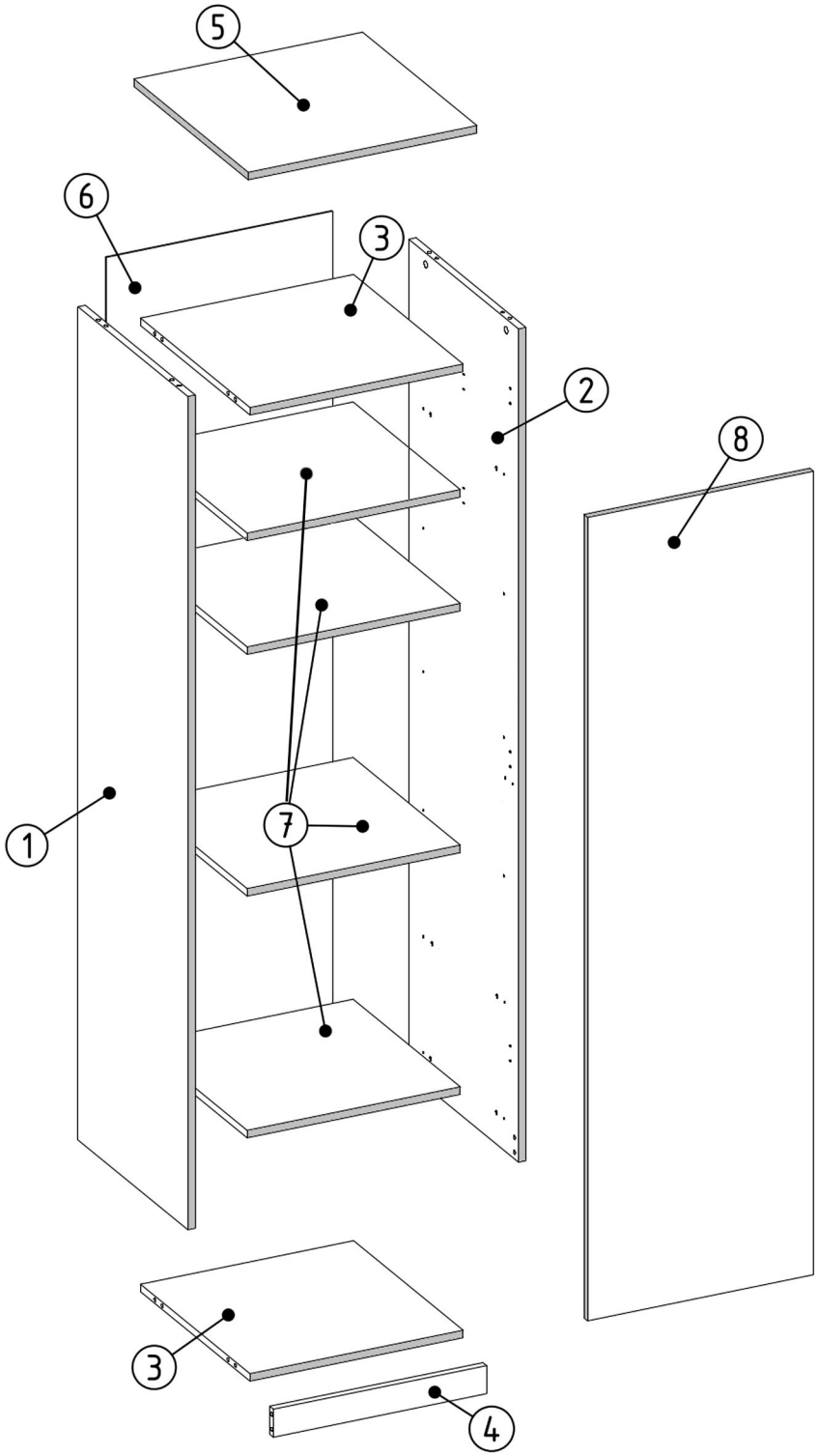

ID	NUMBER	QUANTITY
002191	1	1
002190	2	1
002188	3	2
000589	4	1
002186	5	1
000588	6	1
000591	7	4
002189	8	1

L

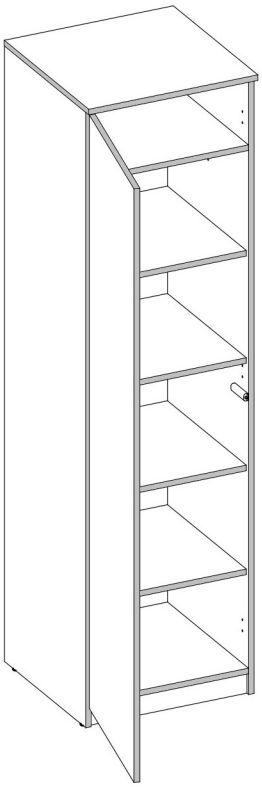

R

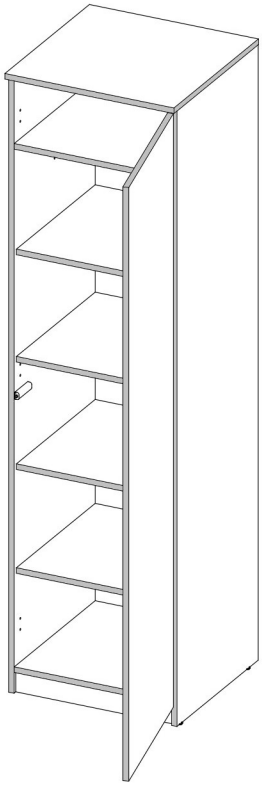

L

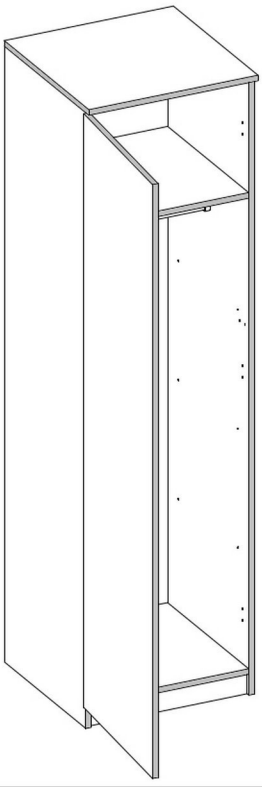

R

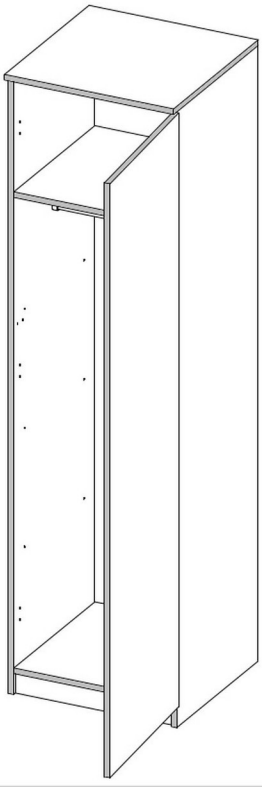

T1	M1	E1	N1
x2	12x15mm x2	8x30mm x2	L=35mm x4

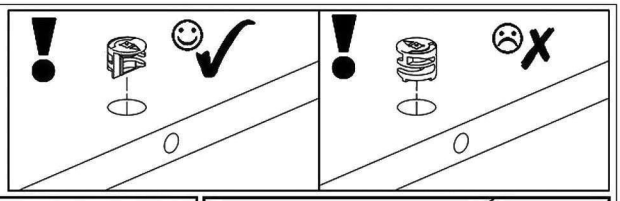

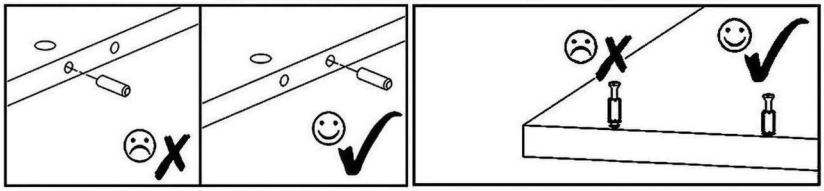

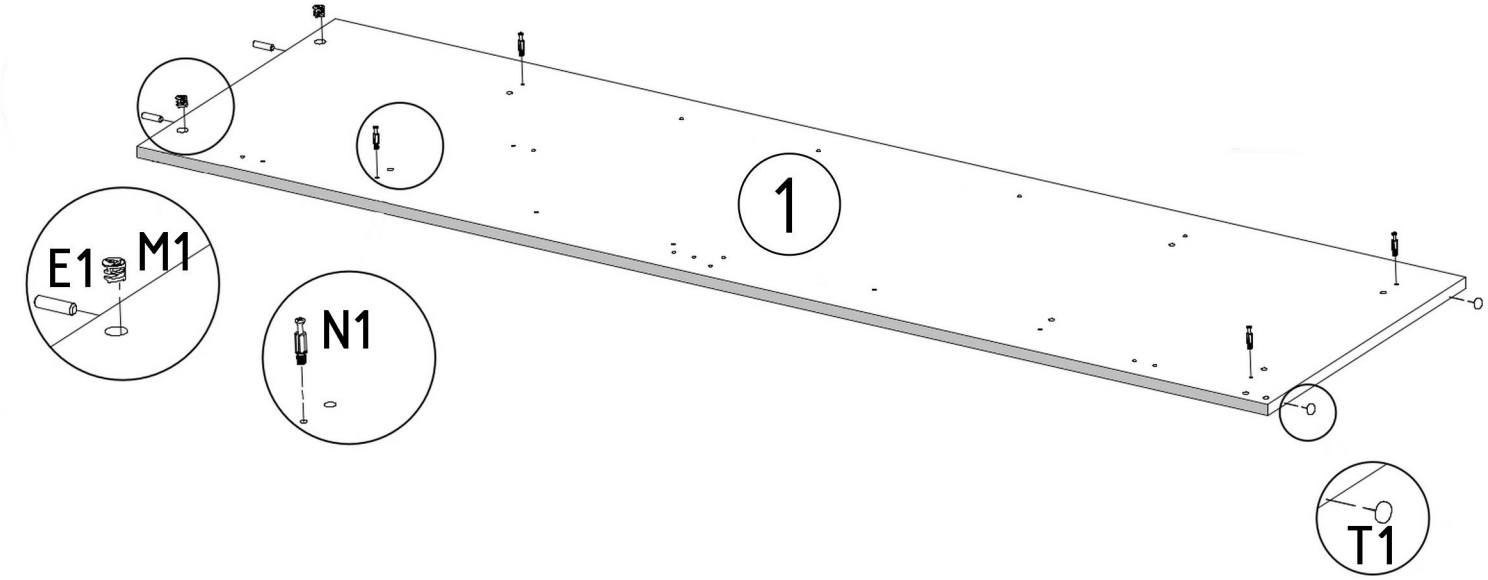

T1	M1	E1	N1
x2	12x15mm x2	8x30mm x2	L=35mm x4

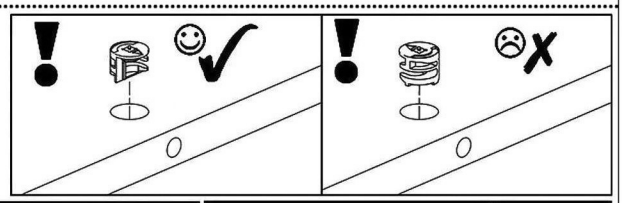

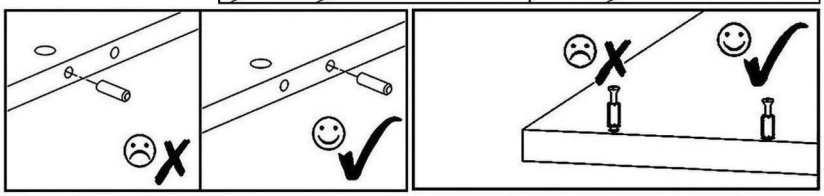

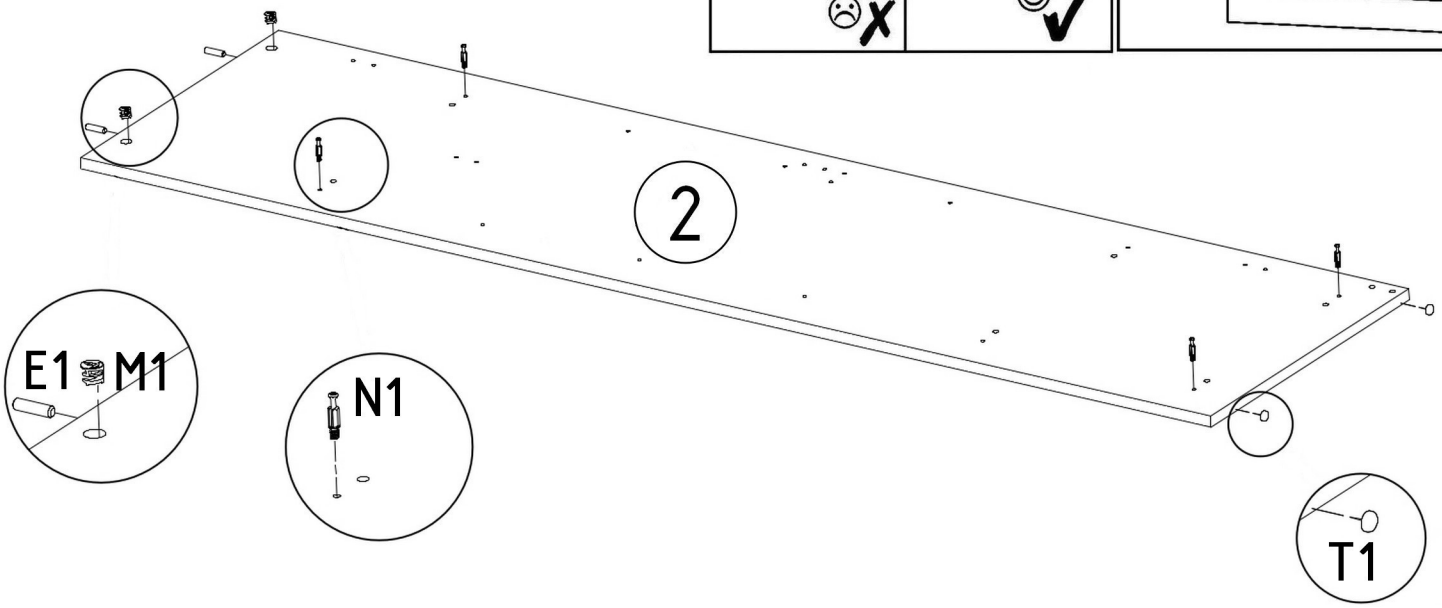

M1 12x15mm x8

E1 8x30mm x8

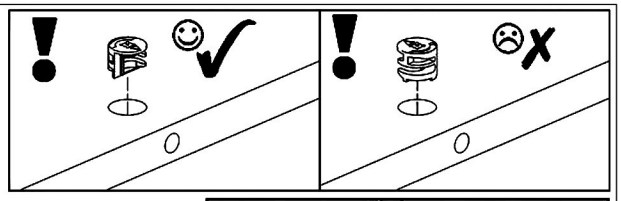

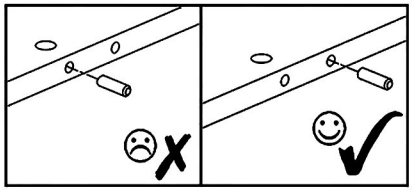

x2

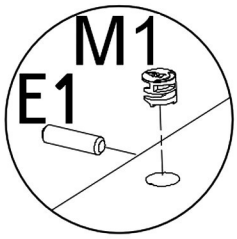

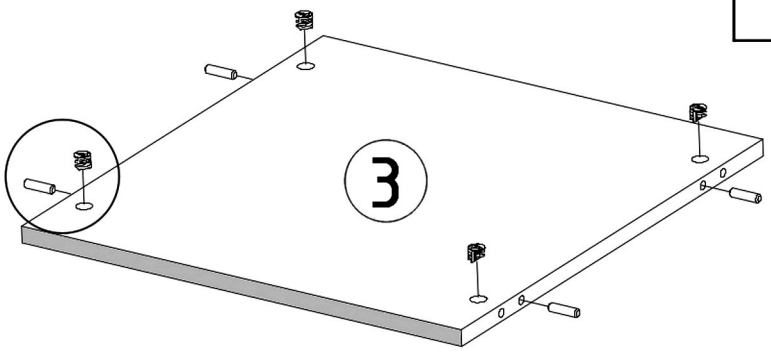

E1 8x30mm x4

T1 x1

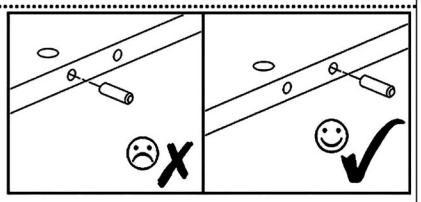

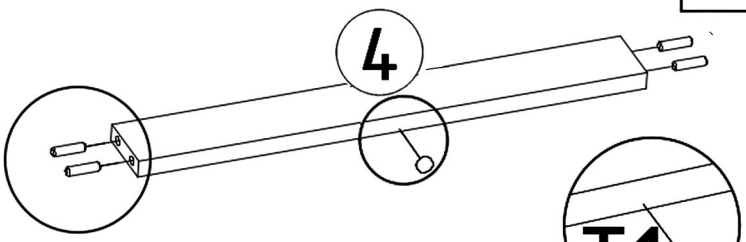

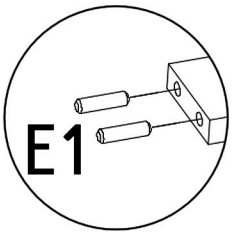

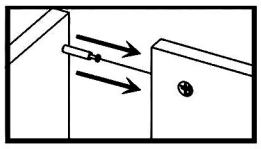

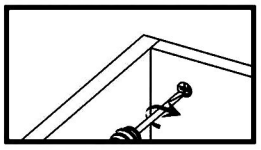

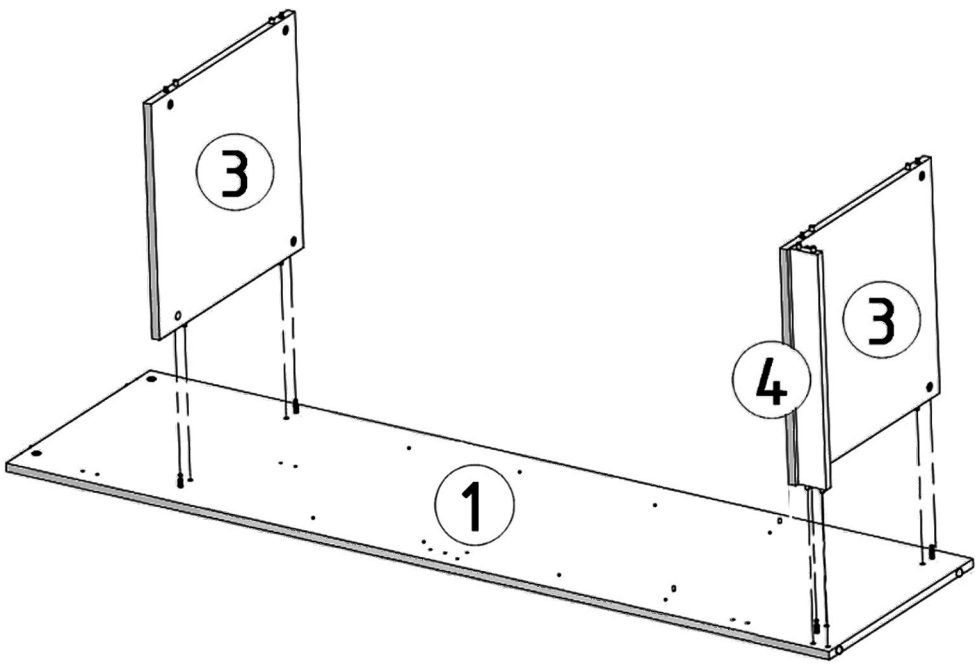

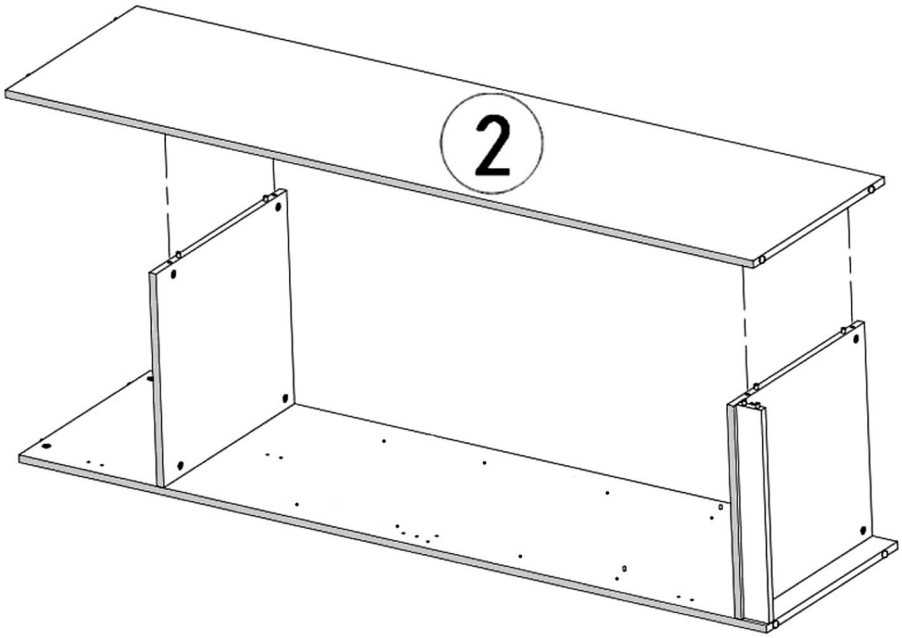
2

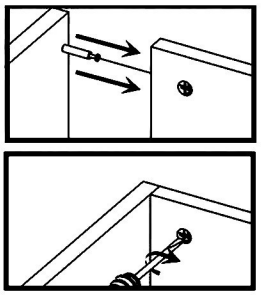

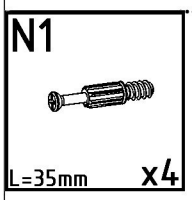
N1
L=35mm
x4

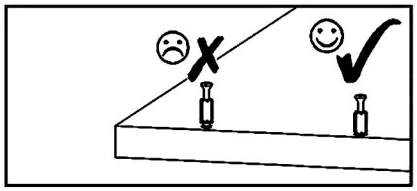

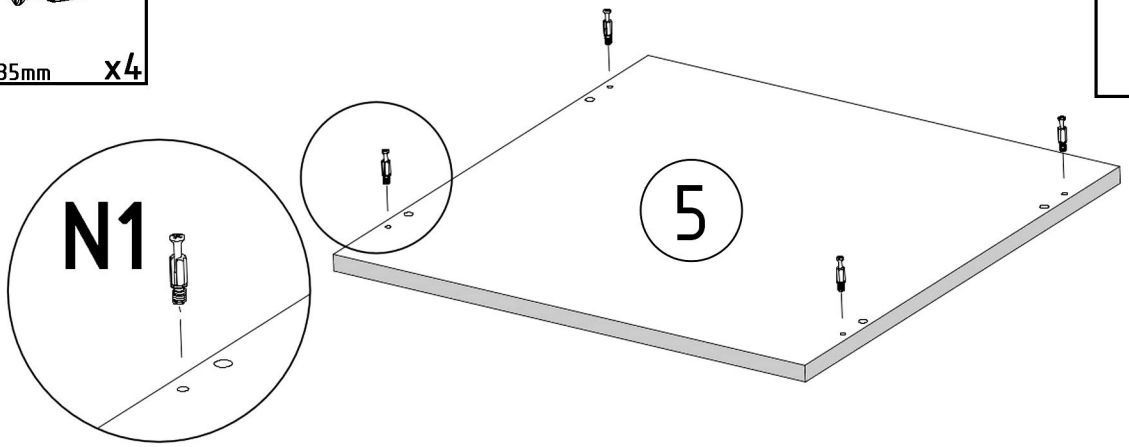
N1
5

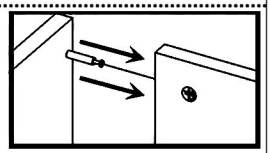

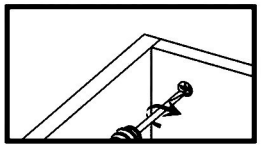

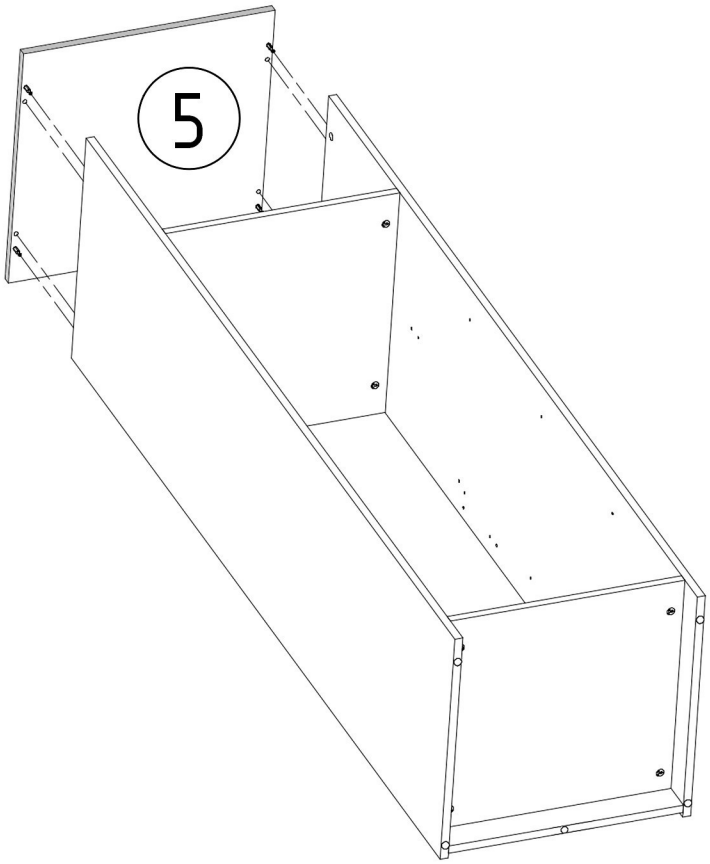
5

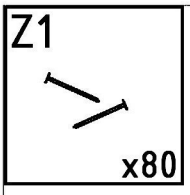
Z1
x80

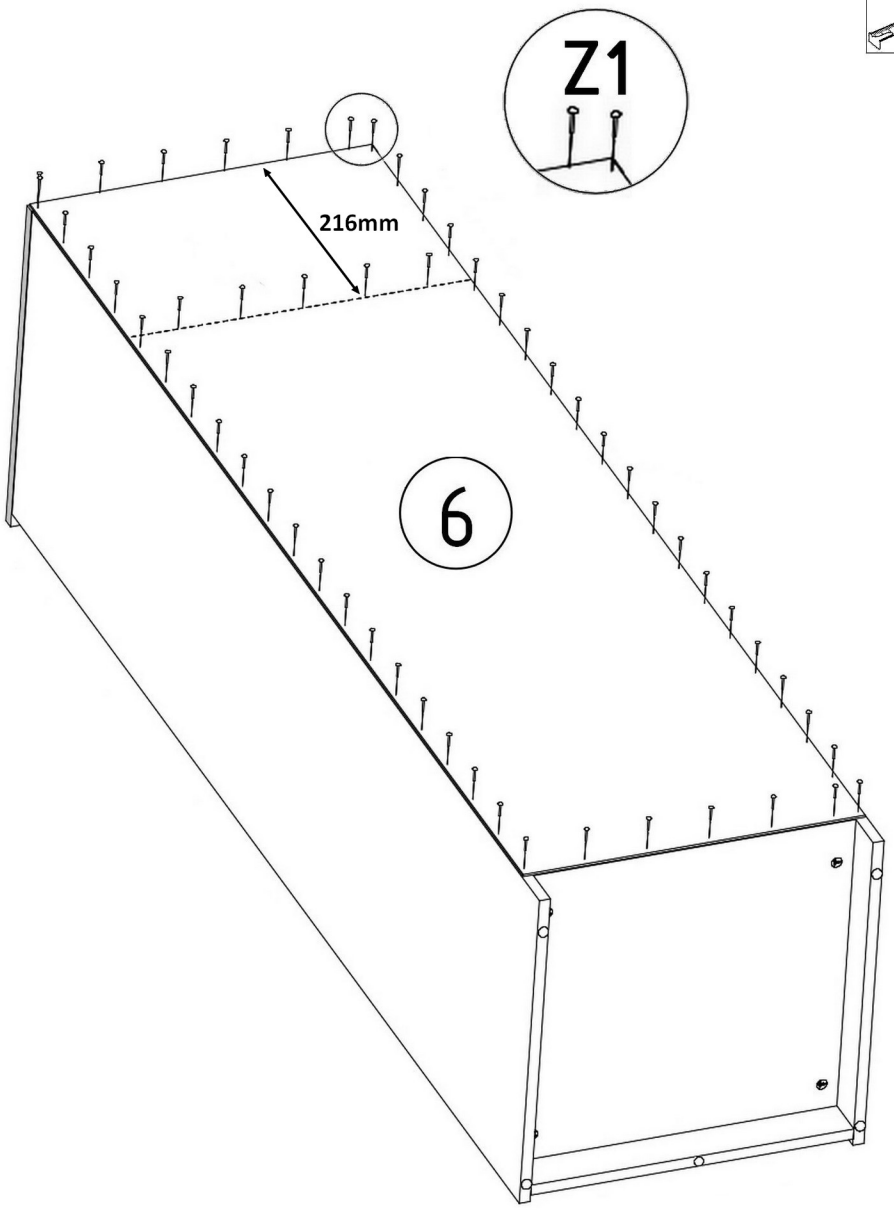
Z1
216mm
6

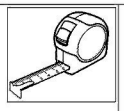

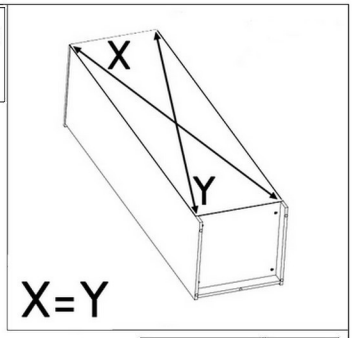
X
Y
X=Y

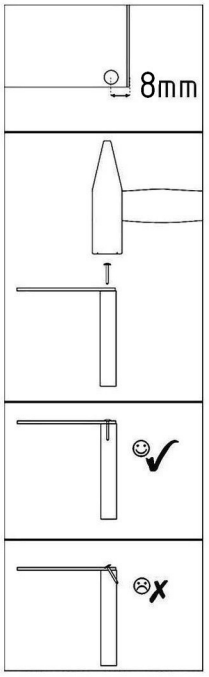
8mm

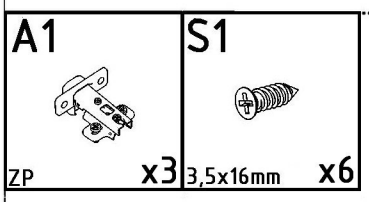
A1
ZP
x3
S1
3,5x16mm
x6

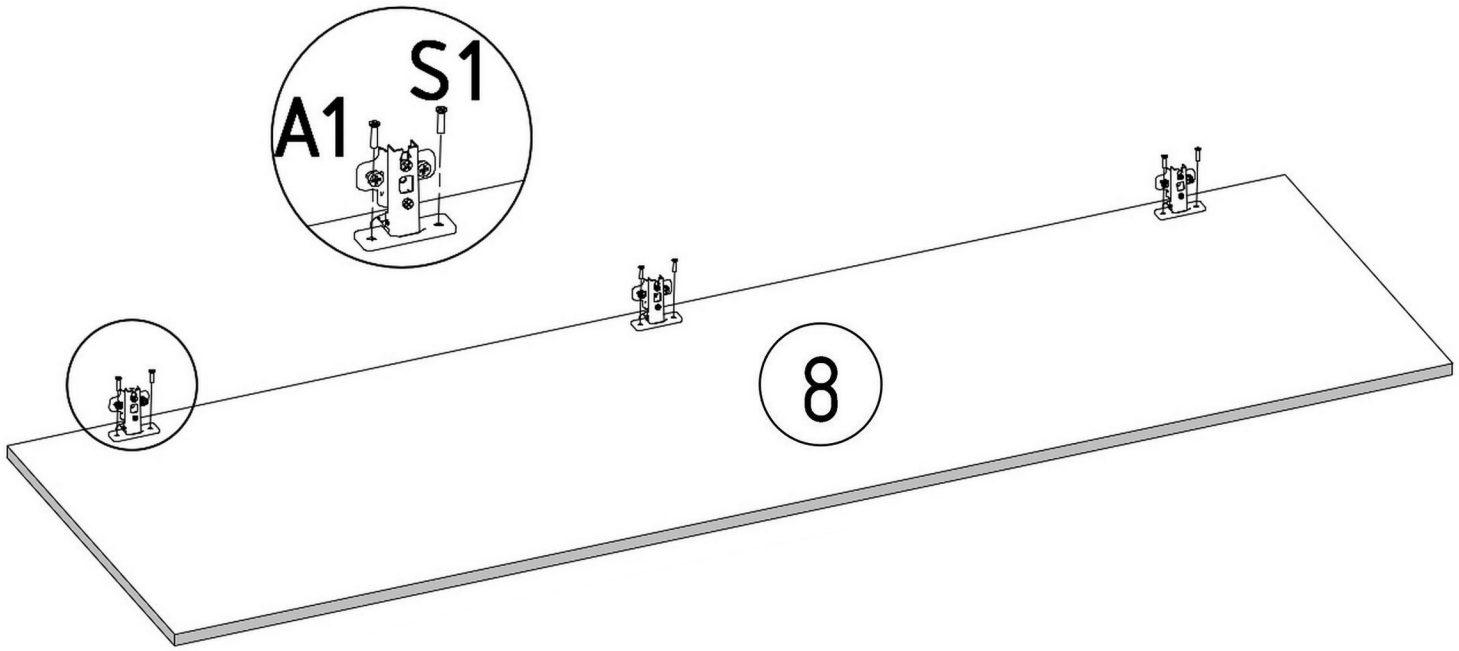
A1
S1
8

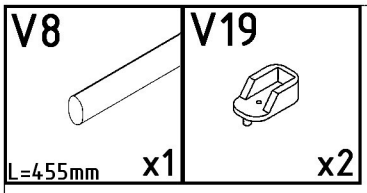
V8
L=455mm
x1
V19
x2

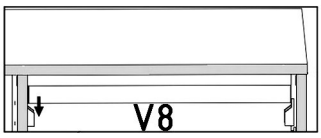
V8

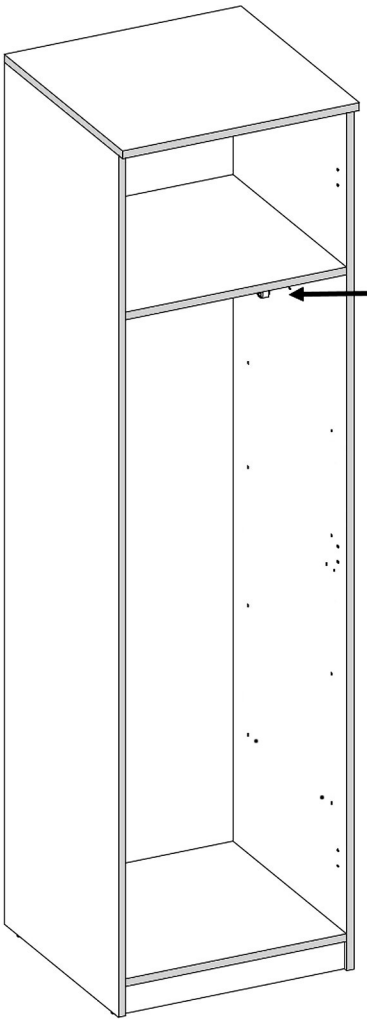

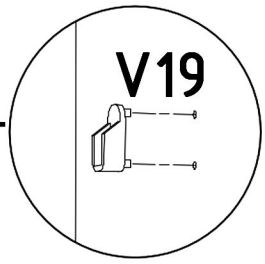
V19

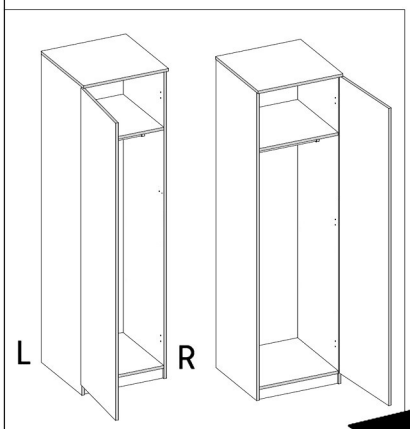
L
R

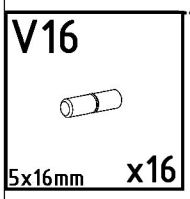
V16
5x16mm
x16

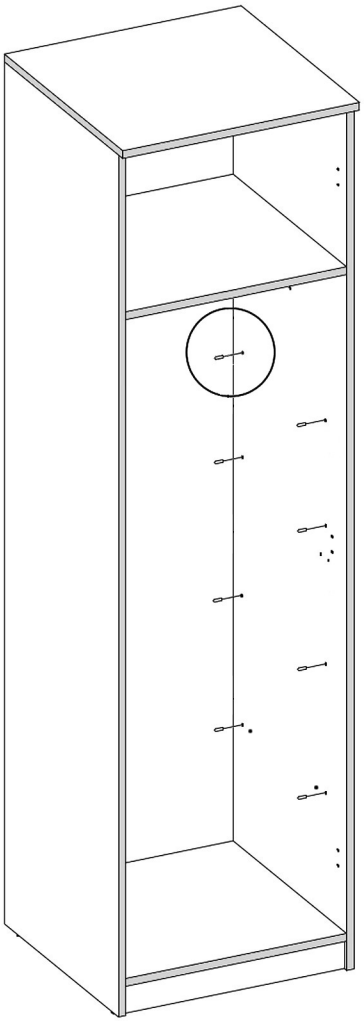

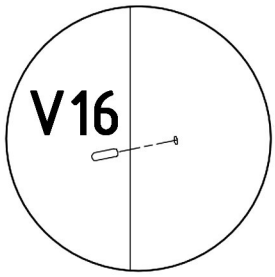
V16

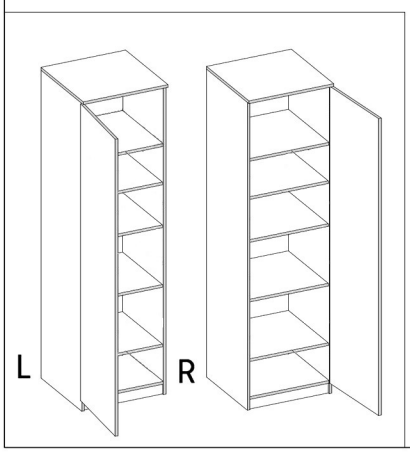
L
R

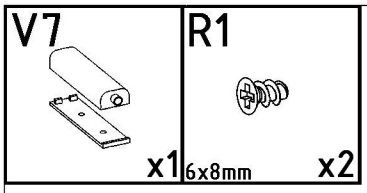
V7
x1
R1
6x8mm
x2

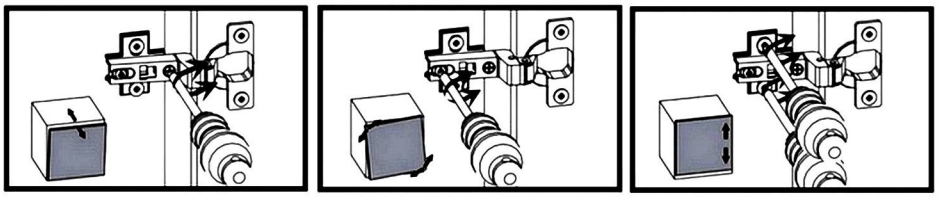

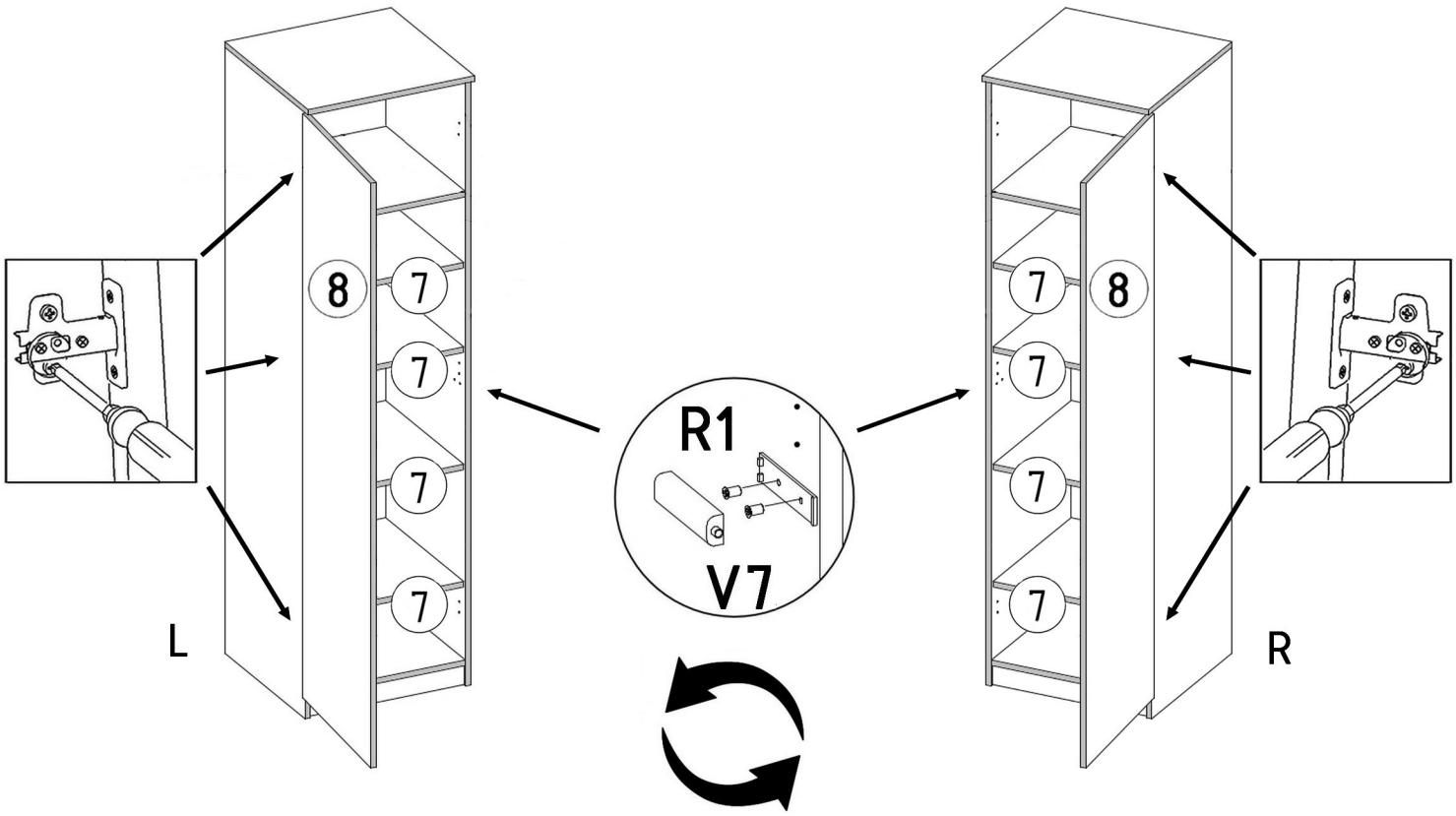
8
7
7
7
7
L
R1
V7
7
7
7
7
8

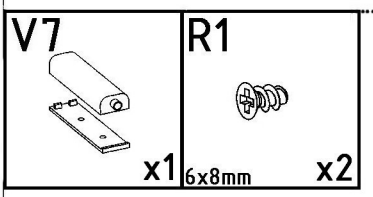
V7
x1
R1
6x8mm
x2

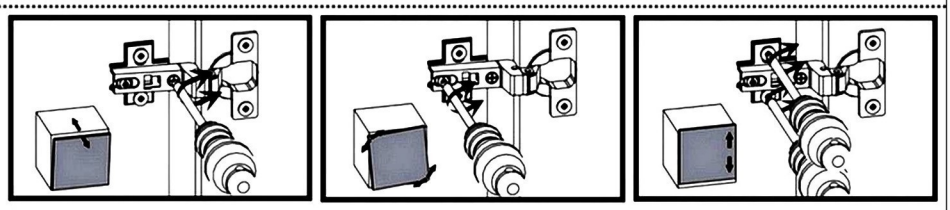

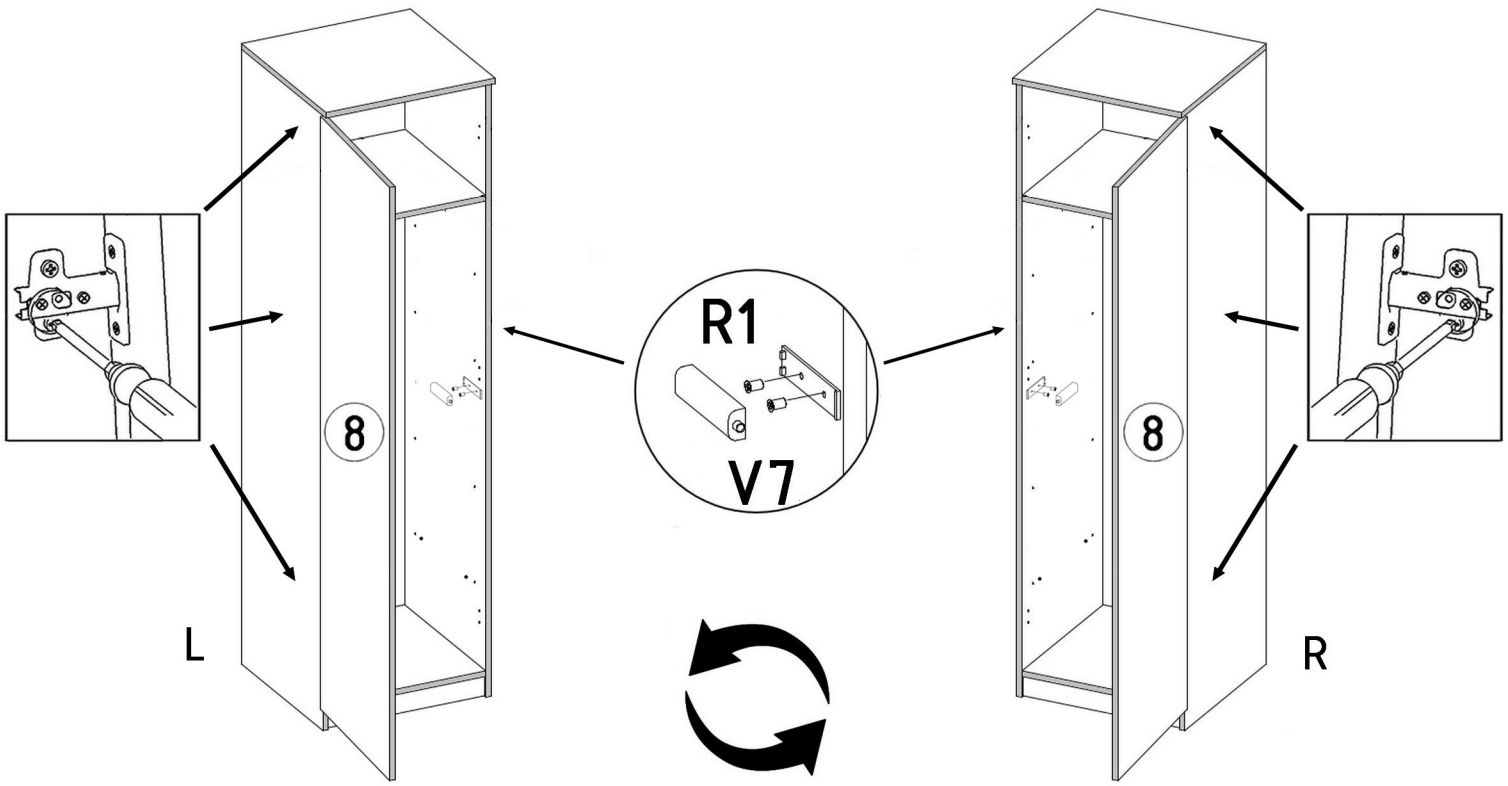
8
L
R1
V7
8
R

V13



x1

