INSTRUKCJA MONTAŻU

Szafa 90 cm z drzwiami i półkami, 180 cm

Kolor: Dąb Sonoma

Kod produktu: OR10173

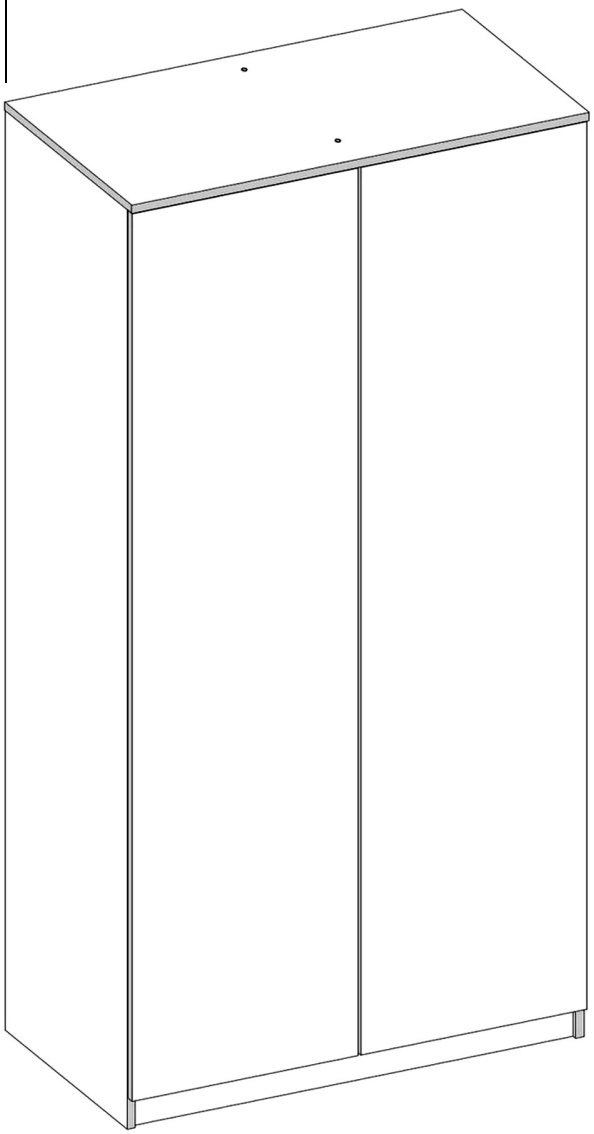

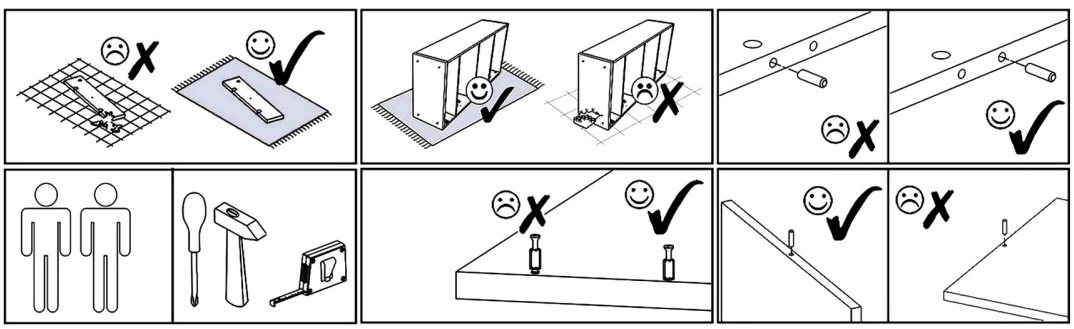

F3 Hex 4mm x1	V13 x1	V16 5x16mm x12				
N1 L=35mm x16	M1 12x15mm x16	F1 7x50mm x4	S1 3,5x16mm x12	R1 6x8mm x4	V19 x2	V15 x5
T1 x6	Z1 x80	A1 ZP x6	E1 8x30mm x20	V7 x2	V8 L=414mm x1	S6 2,5x20mm x5

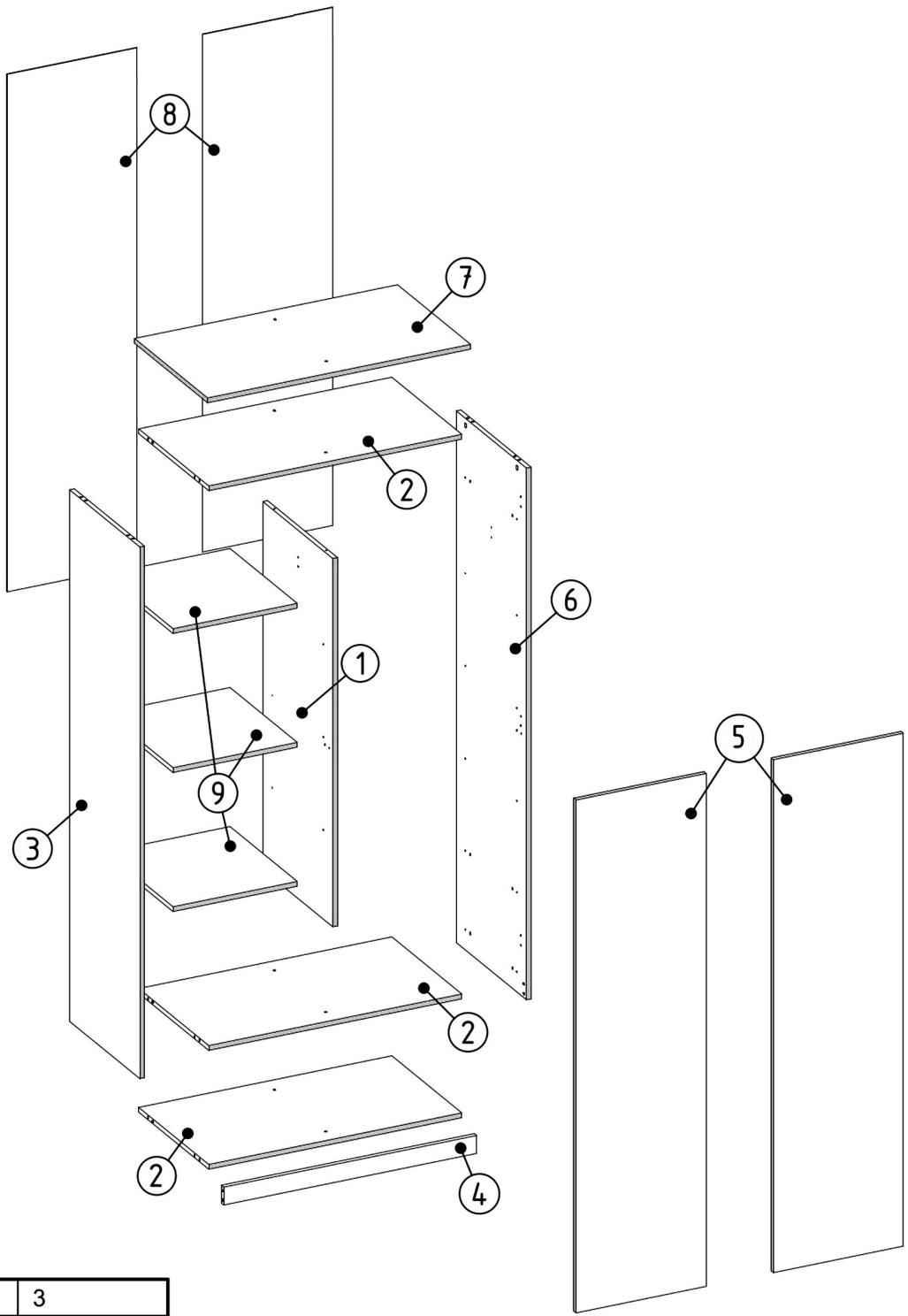

ID	NUMBER	QUANTITY
000089	9	3
002193	8	2
000604	7	1
002190	6	1
000596	5	2
000599	4	1
002191	3	1
000600	2	3
002194	1	1



L

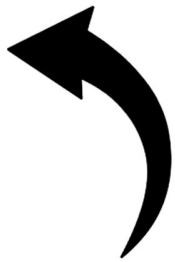

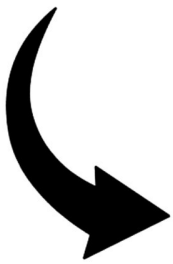

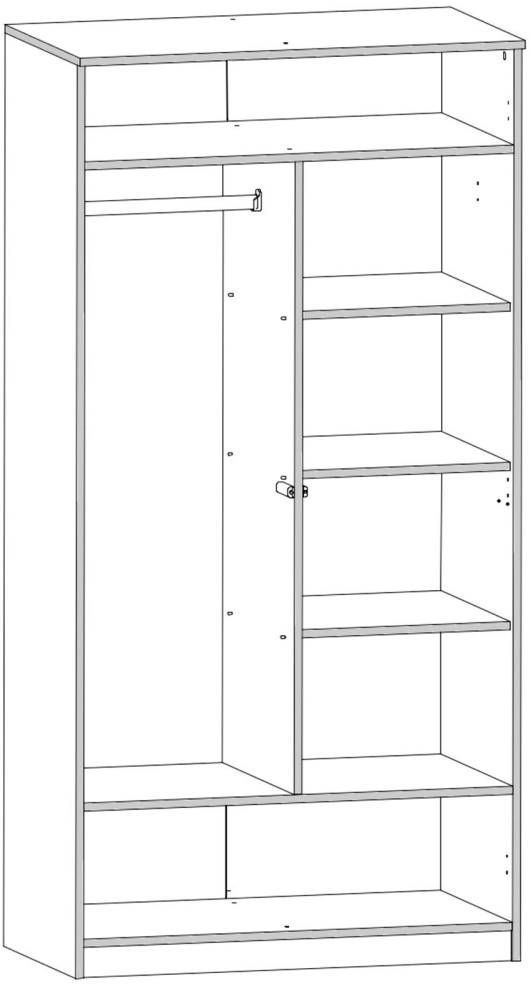

R

V7	R1	V19	V16
x2	6x8mm x4	x1	5x16mm x6

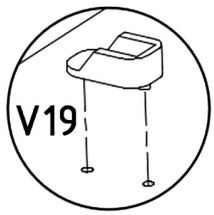

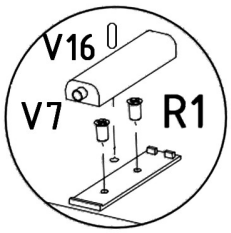

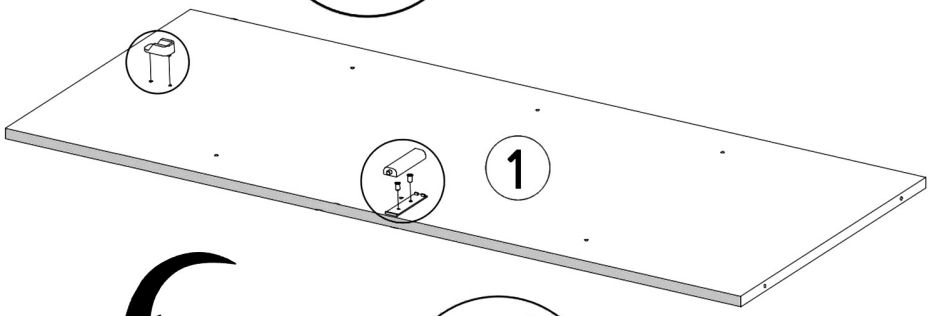

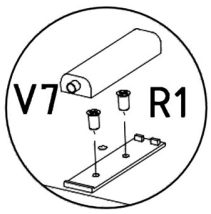

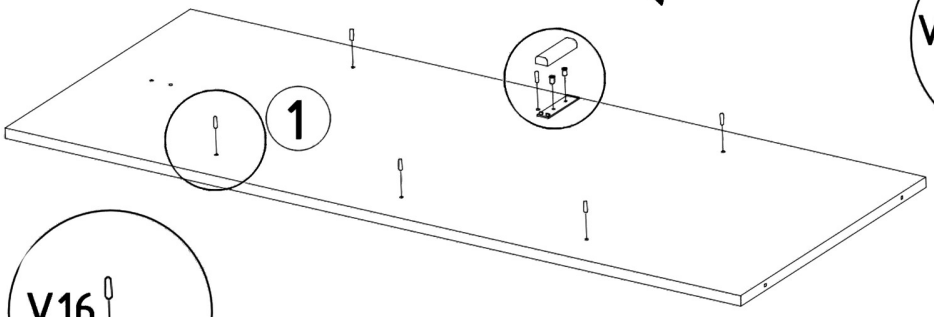

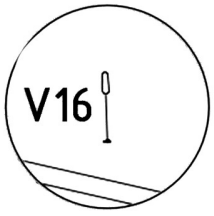

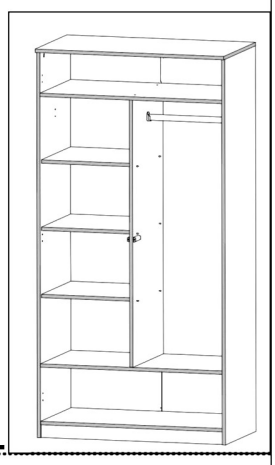

L

V16	V7	R1	V19
5x16mm x6	x2	6x8mm x4	x1



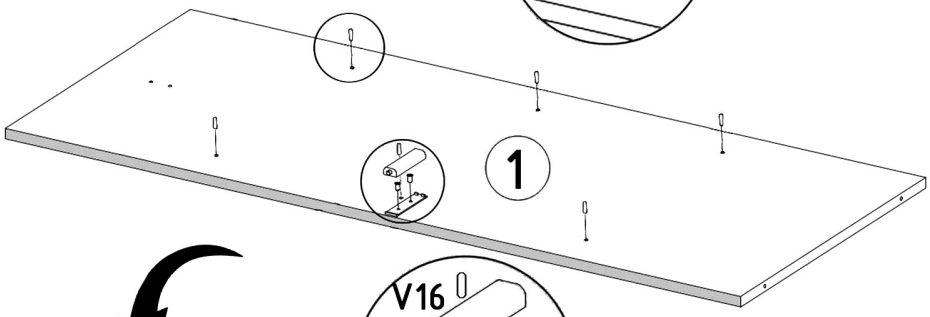

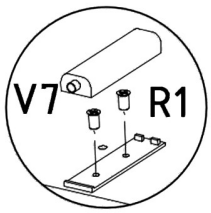

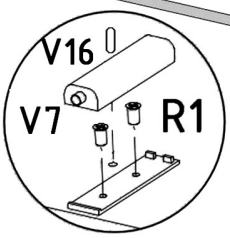

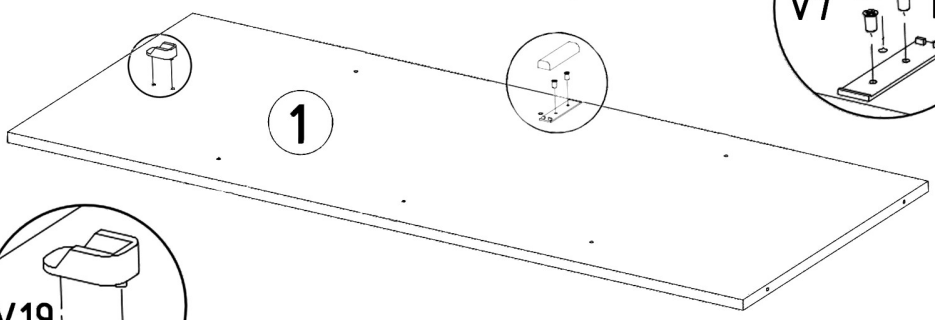

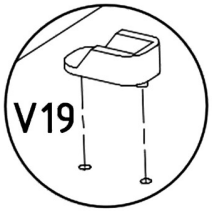

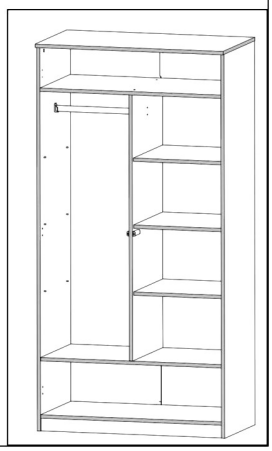

R

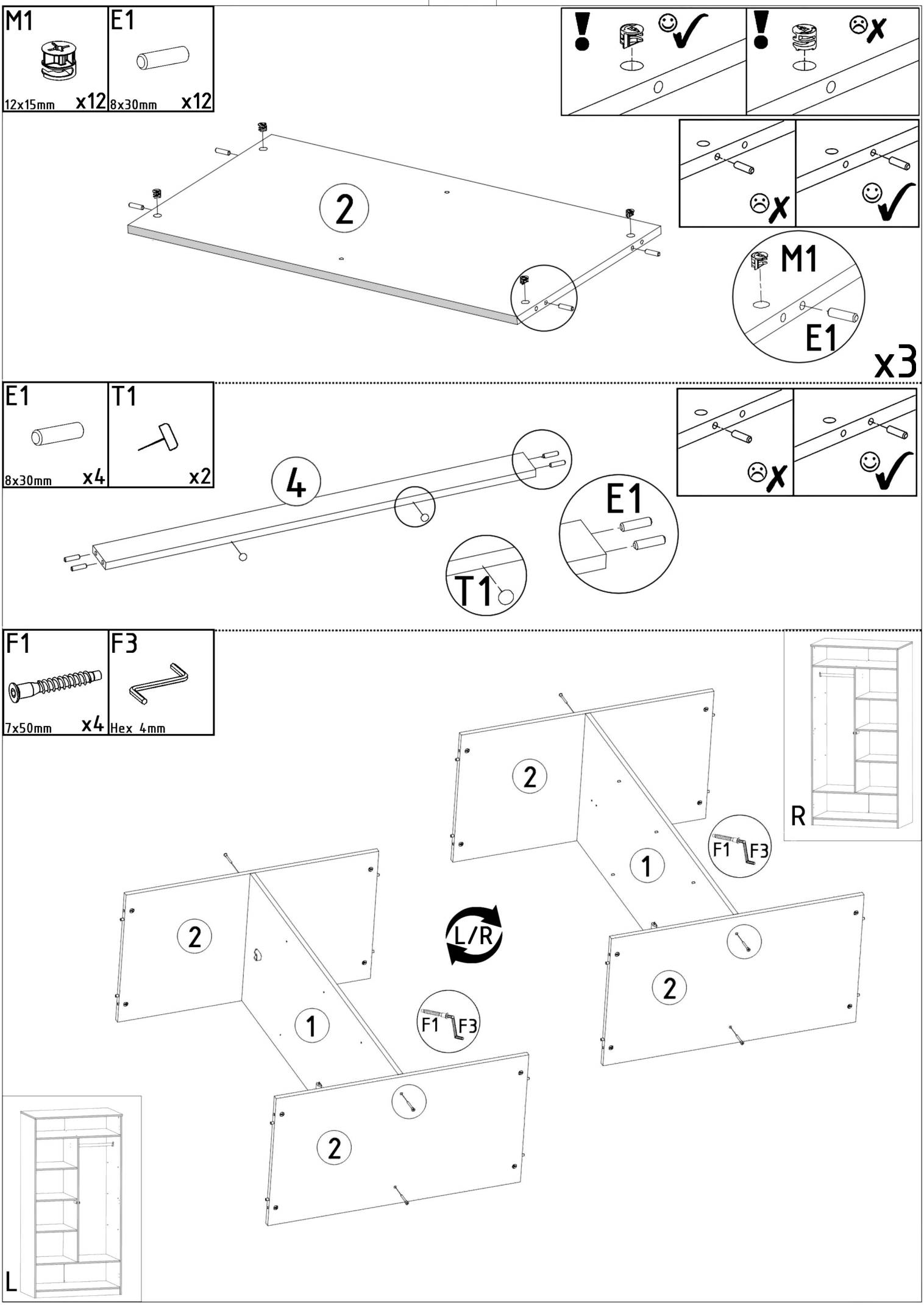
M1
12x15mm x12
E1
8x30mm x12
2
M1
E1
x3
E1
8x30mm x4
T1
x2
4
E1
T1
F1
7x50mm x4
F3
Hex 4mm
2
1
F1 F3
L/R
R
L

T1	M1	E1	N1	V19
x2	12x15mm x2	8x30mm x2	L=35mm x6	x1

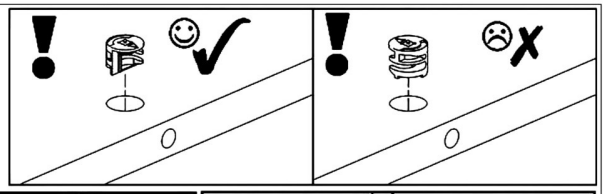

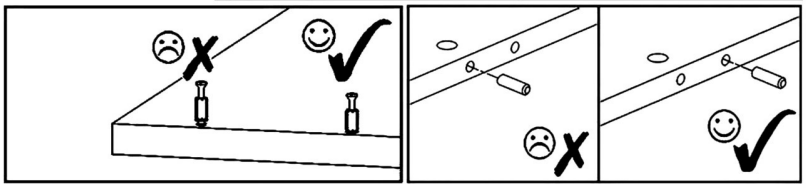





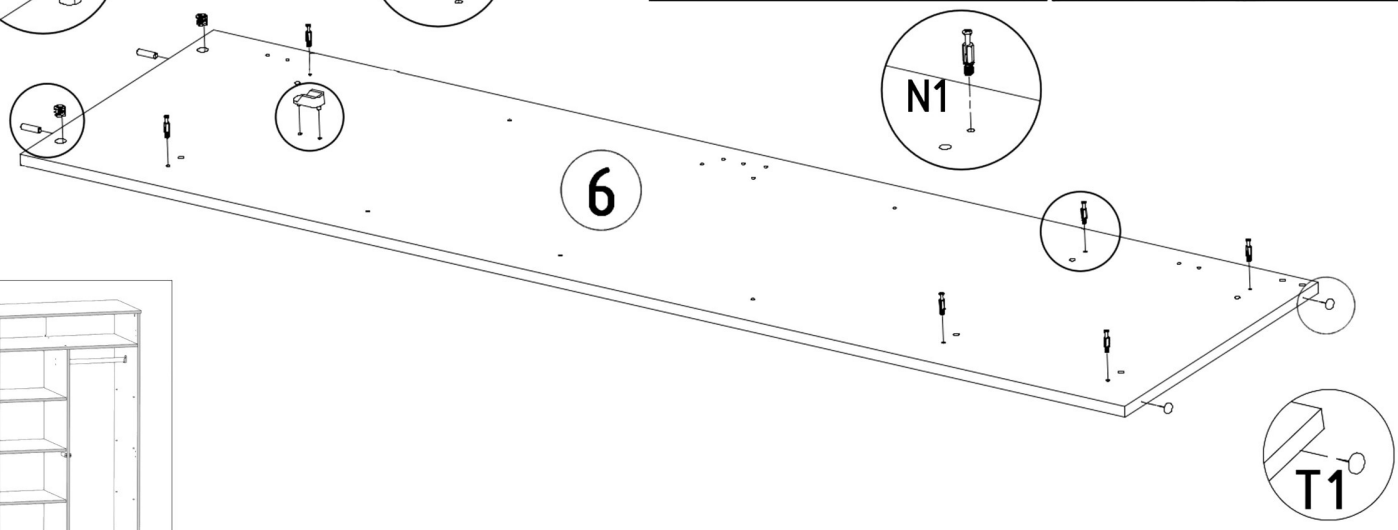

T1	M1	E1	N1	V16
x2	12x15mm x2	8x30mm x2	L=35mm x6	5x16mm x6

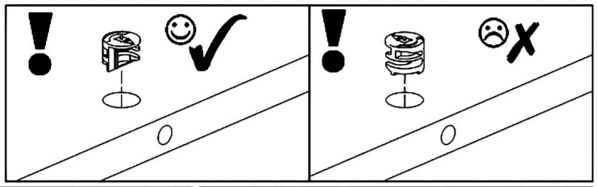

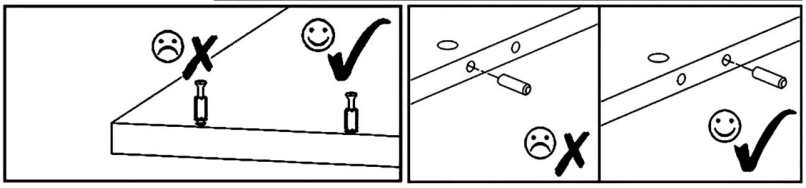

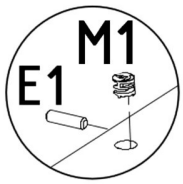

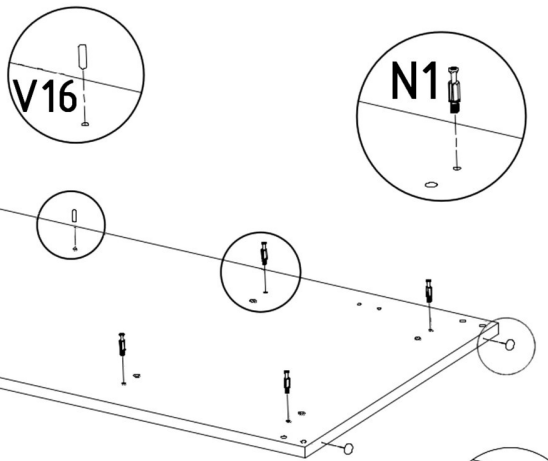

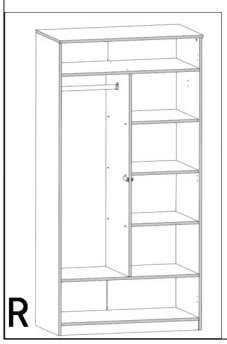

T1	M1	E1	N1	V16
x2	12x15mm x2	8x30mm x2	L=35mm x6	5x16mm x6

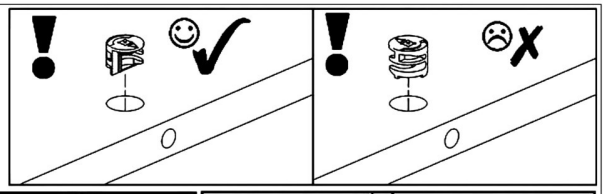

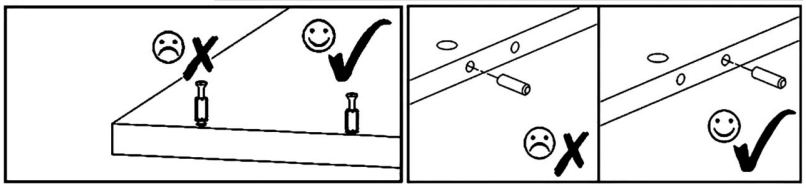

T1	M1	E1	N1	V19
x2	12x15mm x2	8x30mm x2	L=35mm x6	x1

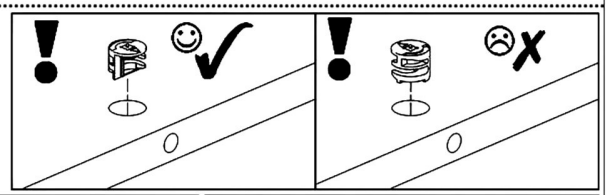

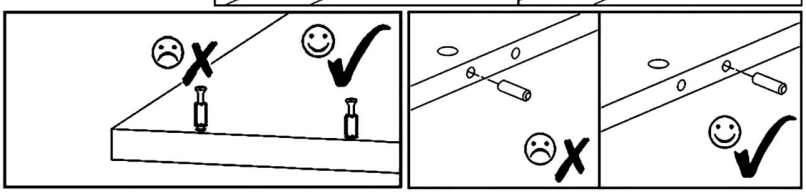

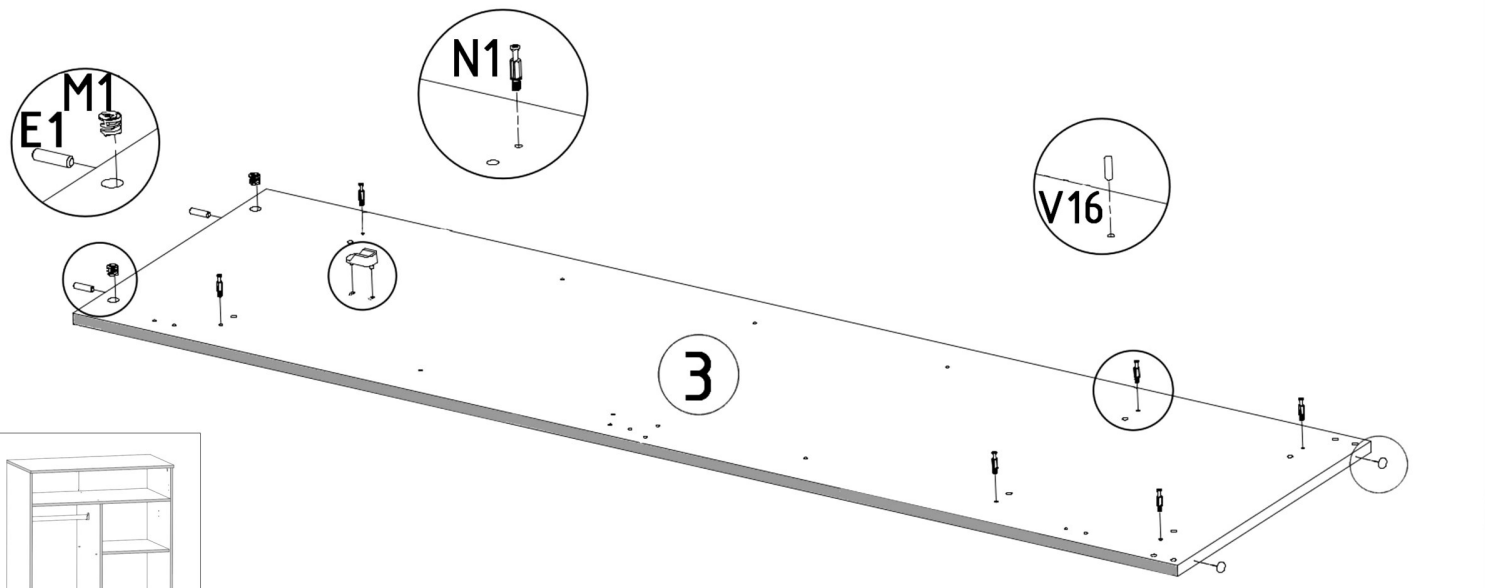

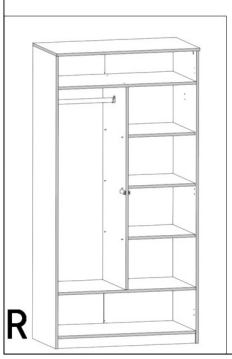



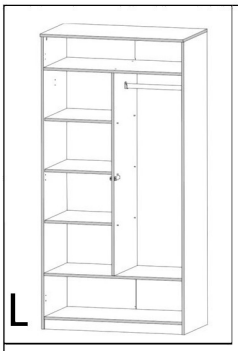
L

3
6
L/R
2
4
3
6
2
4

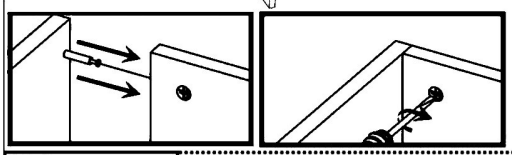

R

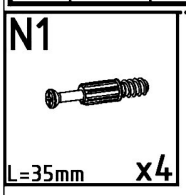
N1
L=35mm
x4

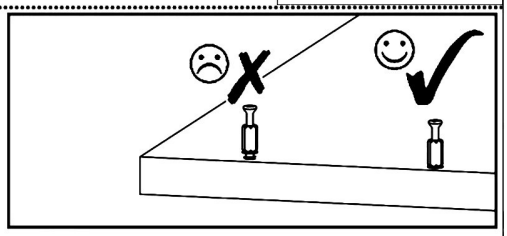

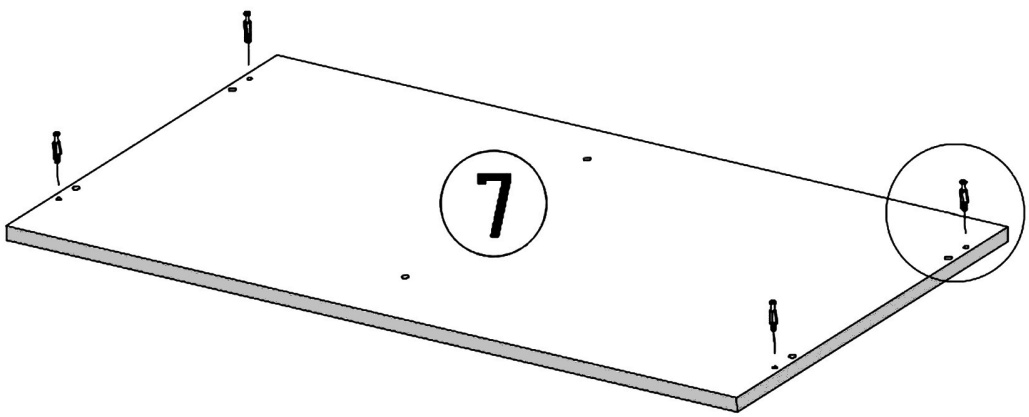
7

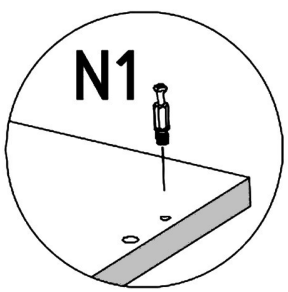
N1

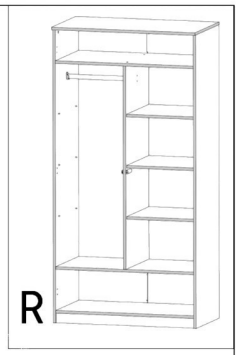

L/R

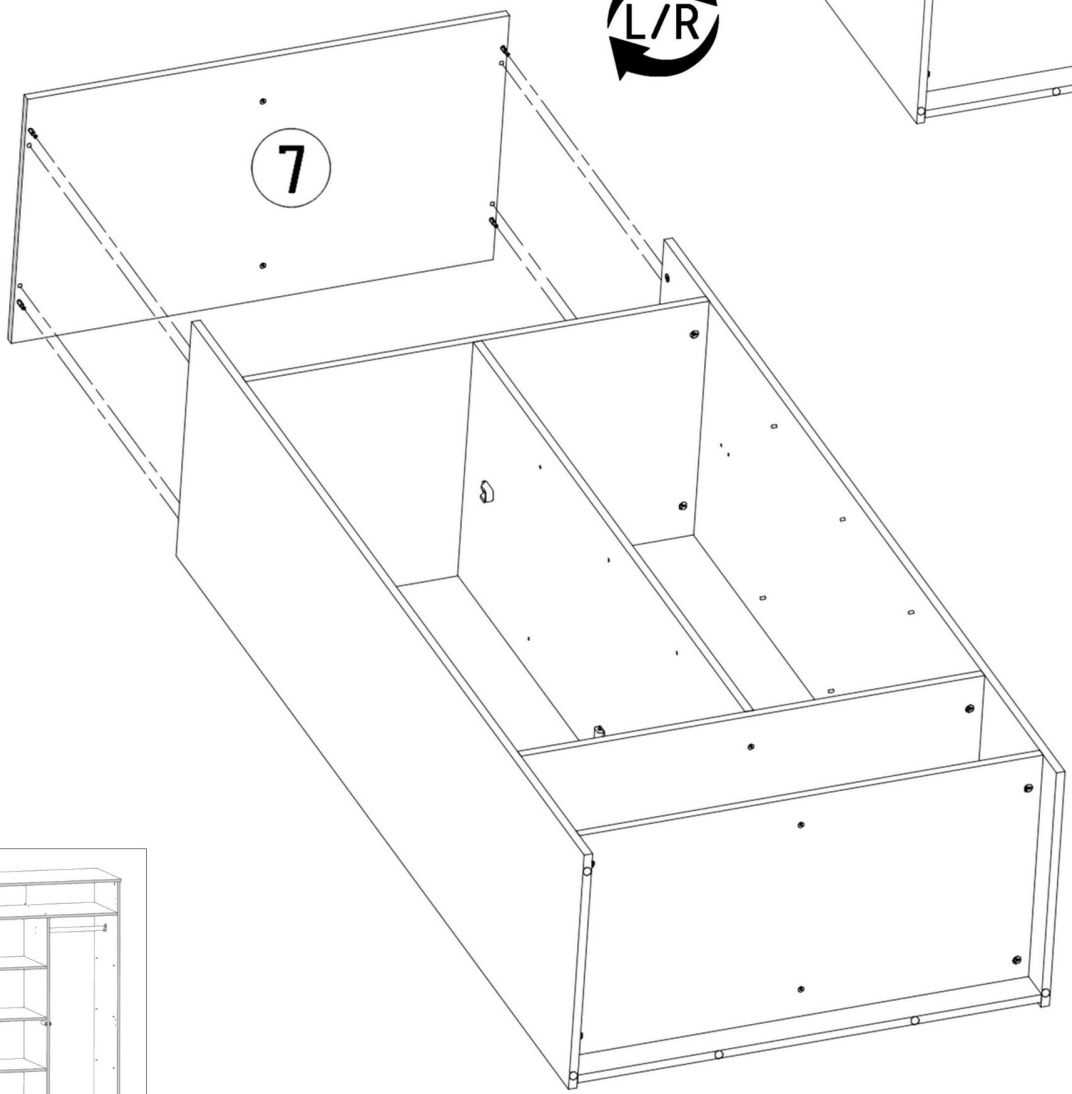

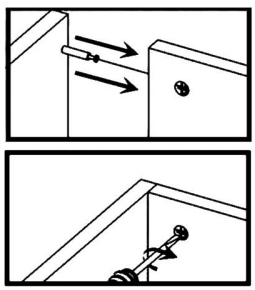

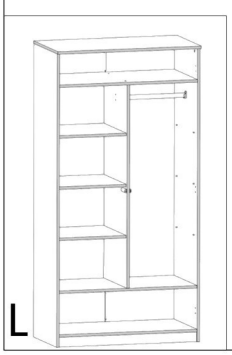

S6	V15	Z1
2,5x20mm x5	x5	x80

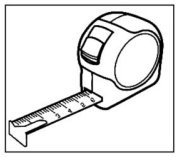

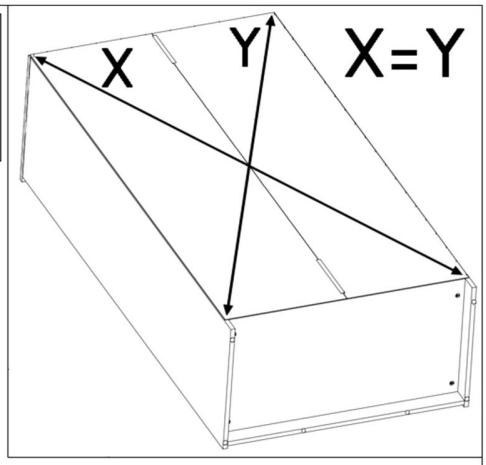



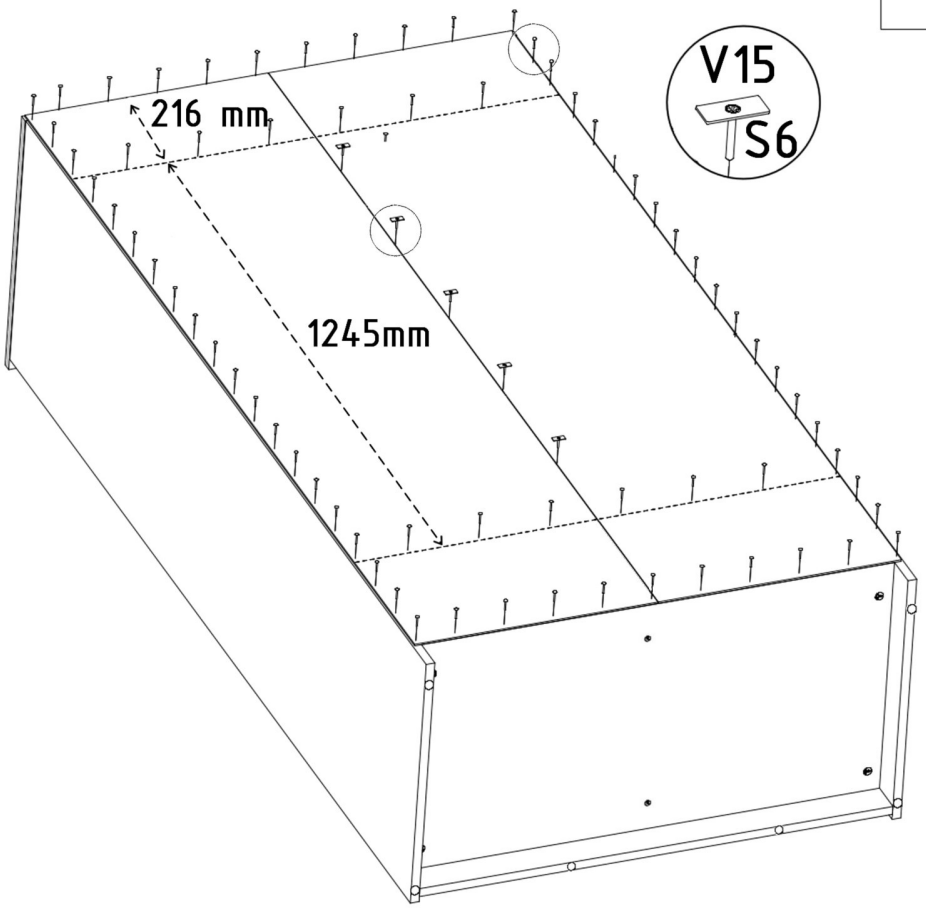

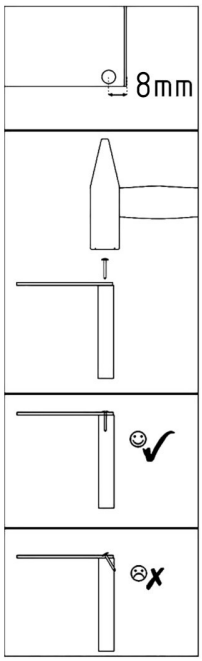

S1	A1
3,5x16mm x12	ZP x6

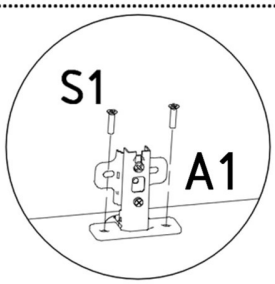

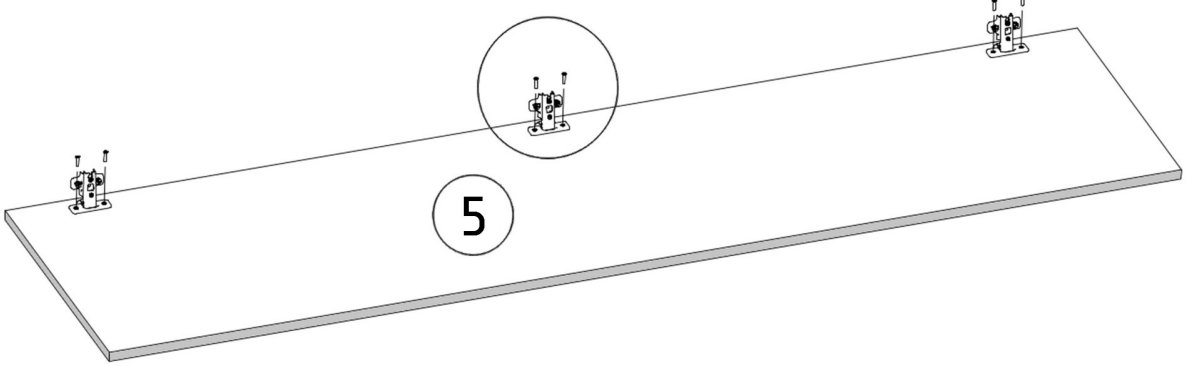

x2

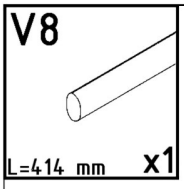
V8
L=414 mm
x1

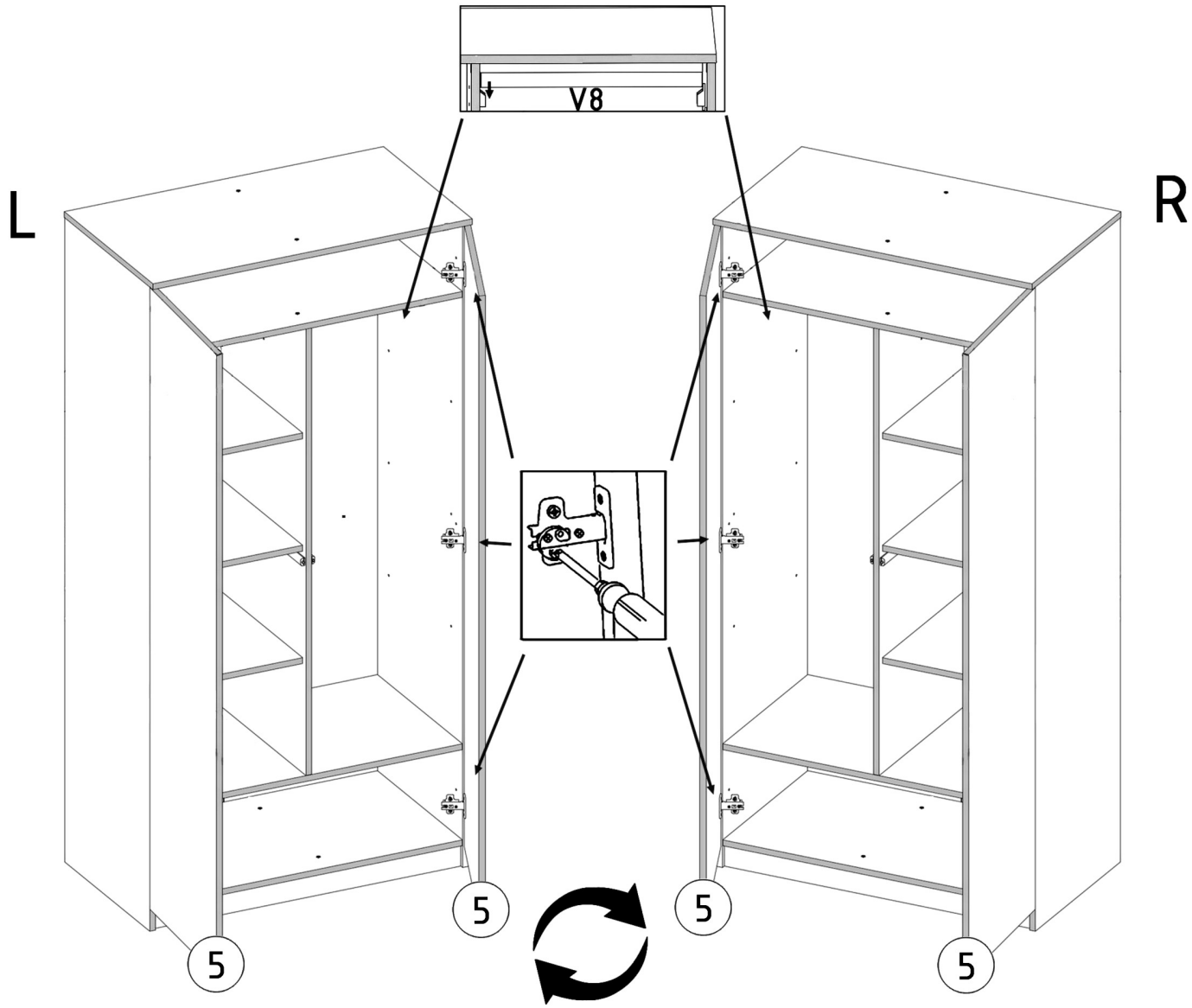
V8
L
R
5
5
5

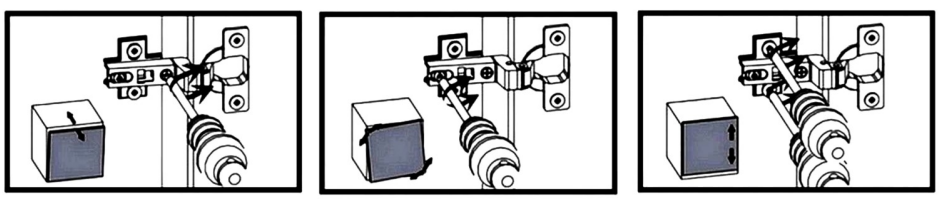

V13



x1

