INSTRUKCJA MONTAŻU

Szafka nocna 27 cm z 2 szufladami i półką, 65 cm

Kolor: Biały

Kod produktu: OR10465

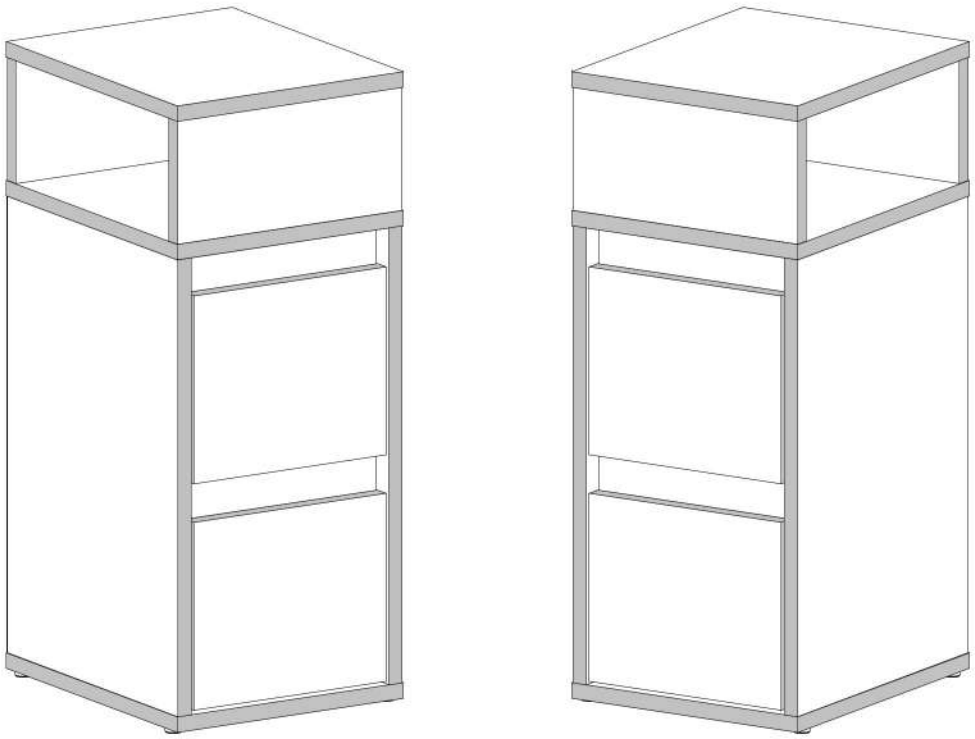

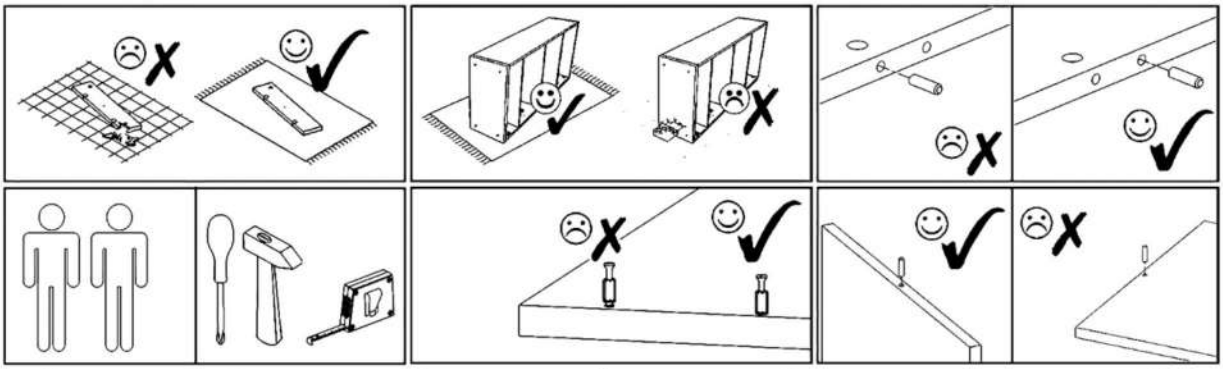

E1 8x30mm x16	F1 7x50mm x8	F3 Hex 4mm x1	N1 L=35mm x8	M1 12x15mm x8	T1 x4	P1 L=250mm x2	R1 6x8mm x8
Z1 x40	B1 B ø17/4mm x4	S1 3,5x16mm x8	V12 GLUE x1	S8 4x35mm x4	V69 L-125mm x2		

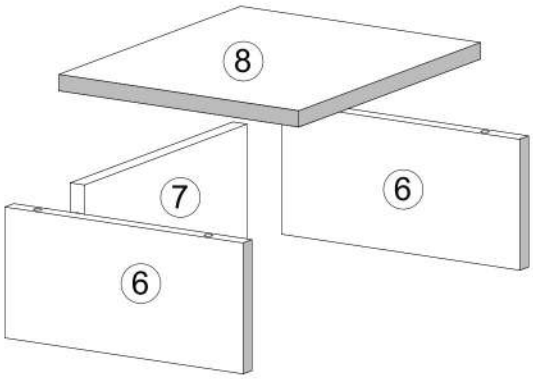

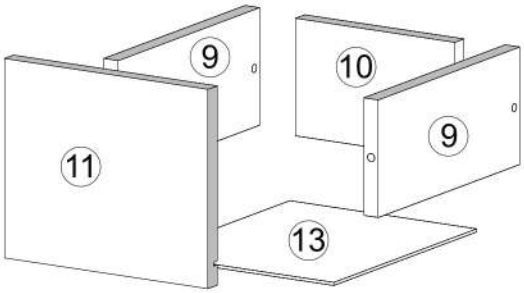

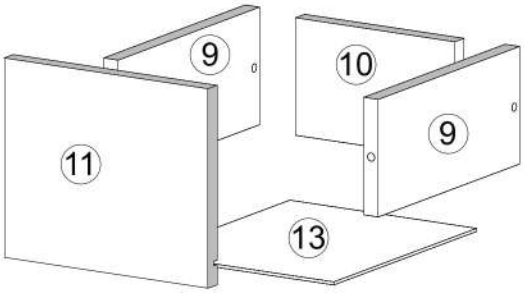

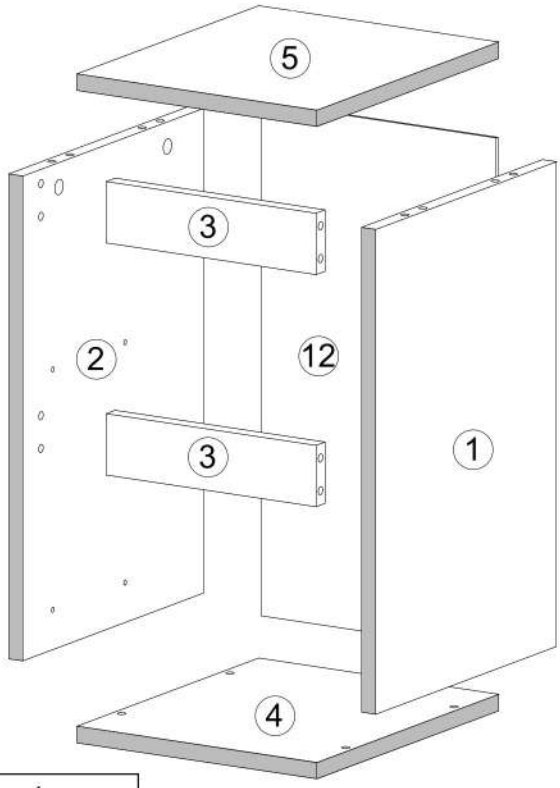

002139	1	1
002138	2	1
002146	3	2
002141	4	1
002140	5	1
002144	6	2
002143	7	1
002142	8	1
000378	9	4
002149	10	2
002147	11	2
002148	12	1
002150	13	2
ID	NUMBER	QUANTITY

E1	M1	R1	P1
8x30mm x4	12x15mm x4	6x8mm x8	L=250mm x2

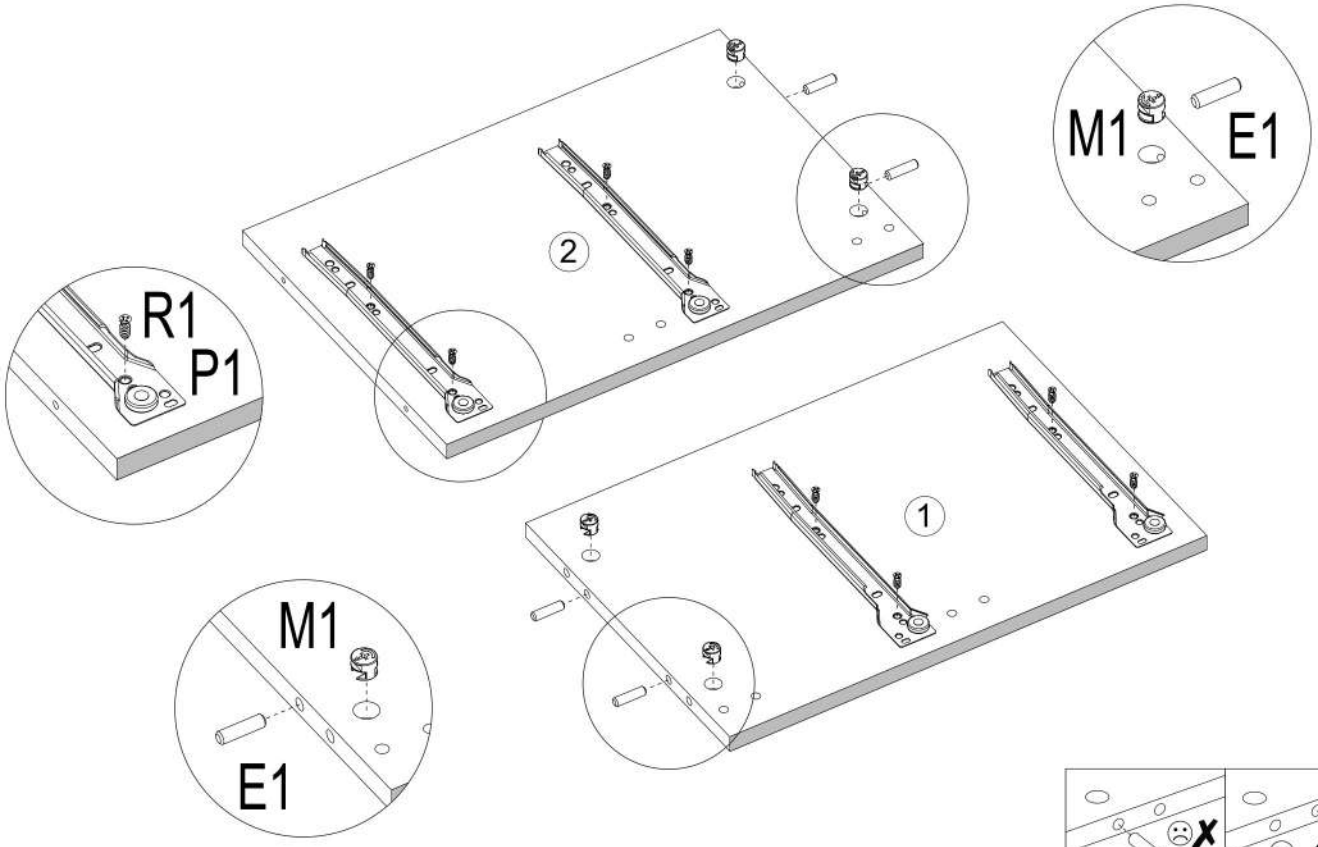

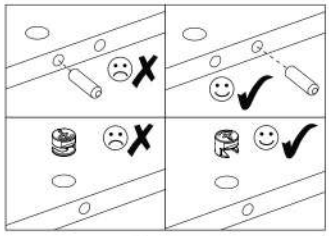

E1	V12
8x30mm x12	x1

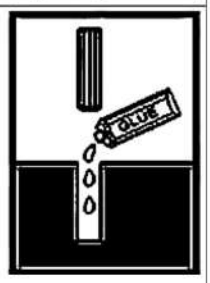

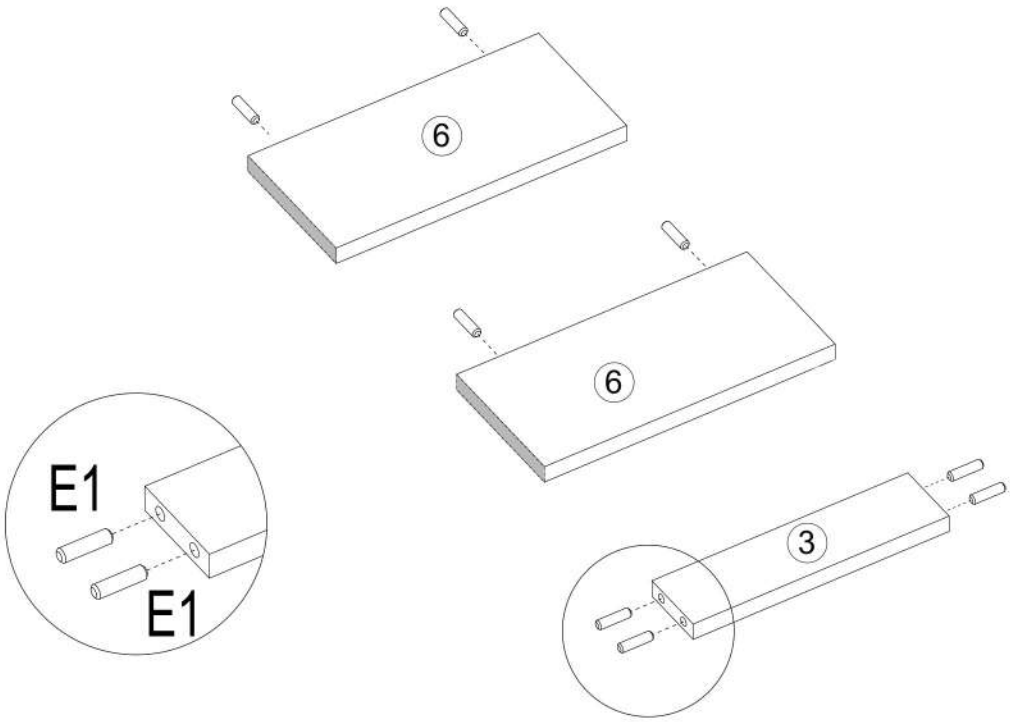

x2

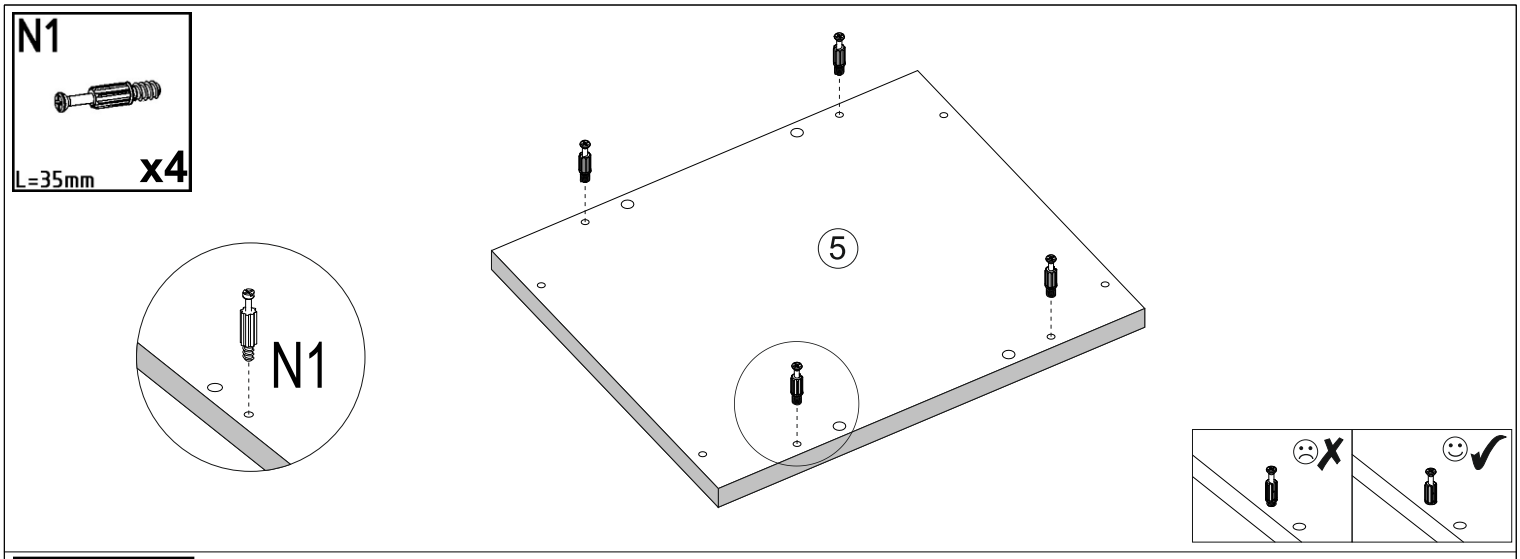
N1
L=35mm
x4
N1
5

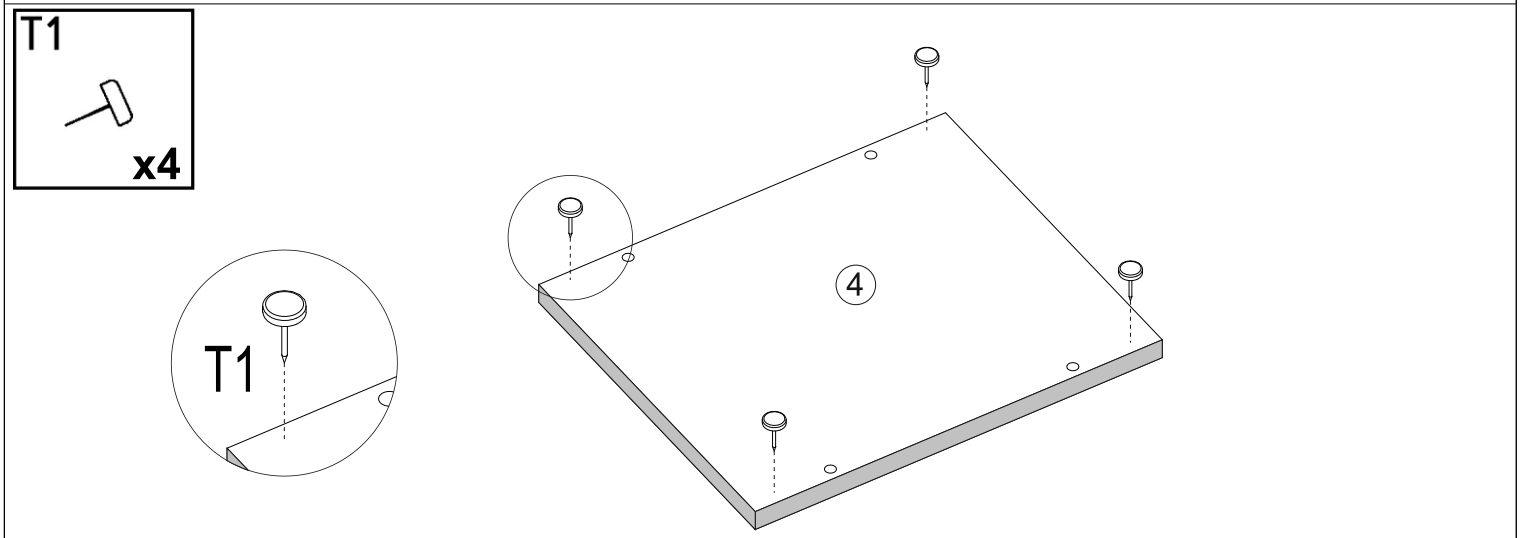
T1
x4
T1
4

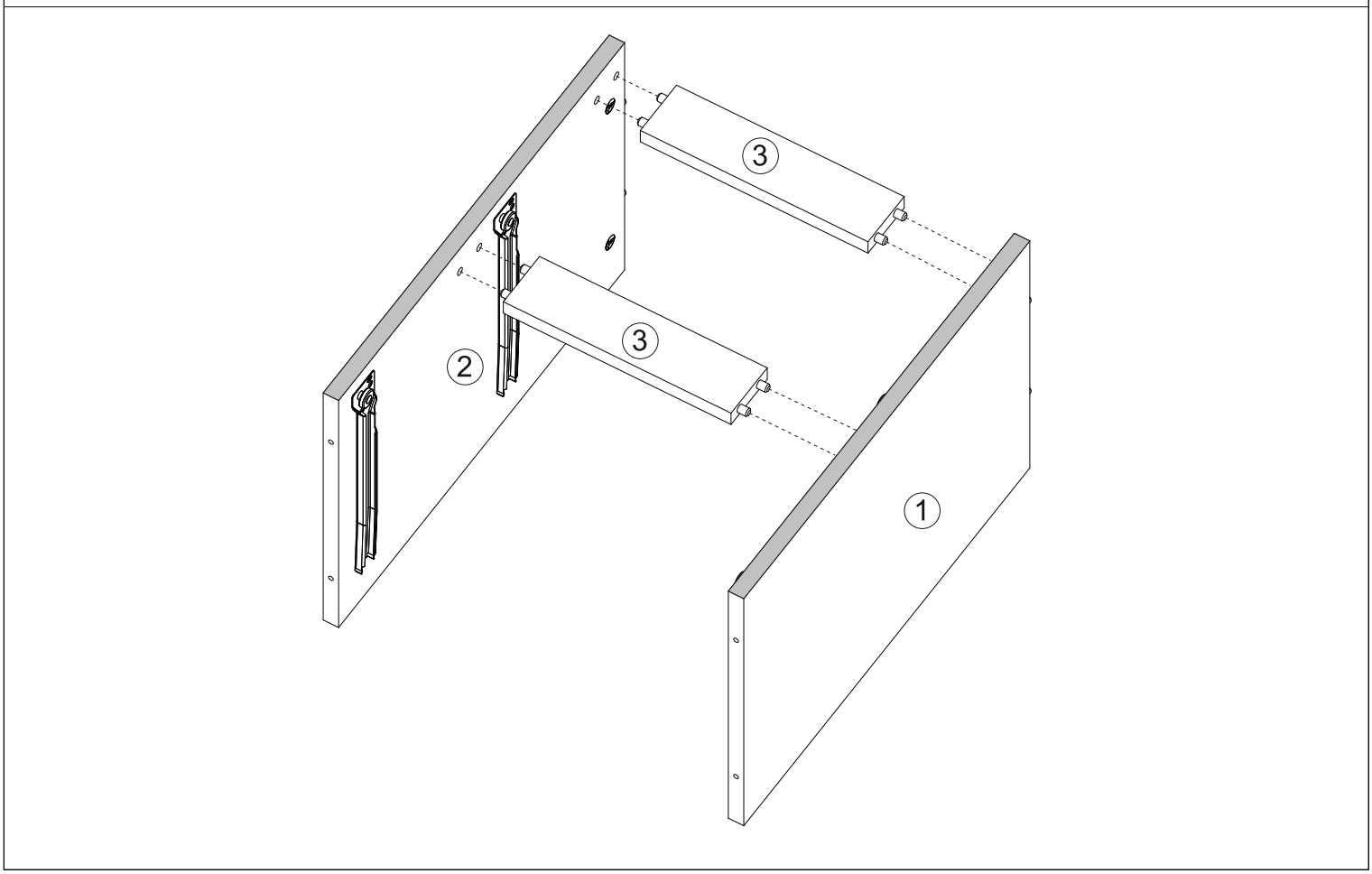
3
3
2
1

F1
7x50mm x4

F3
Hex 4mm x1

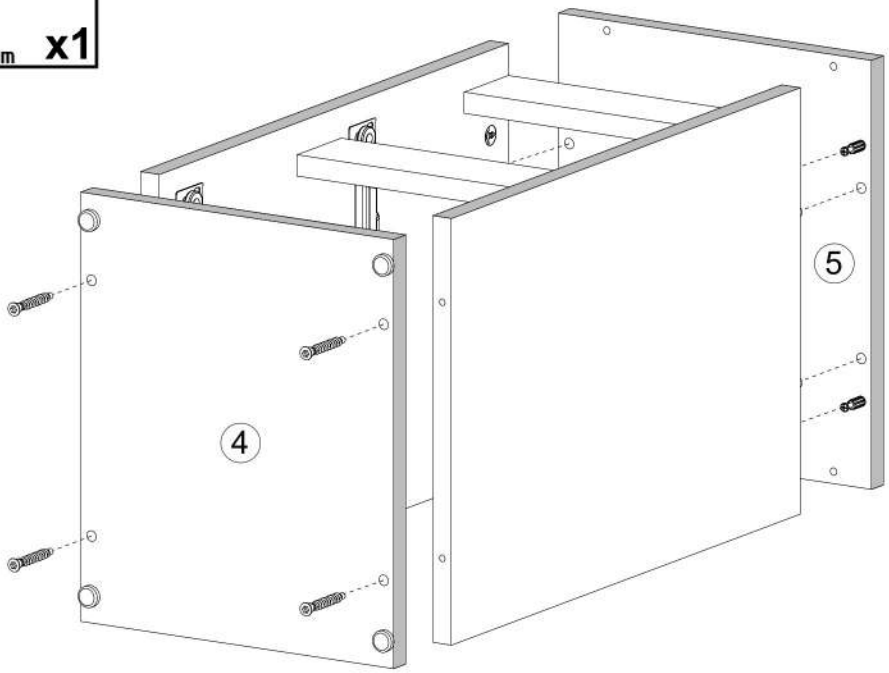



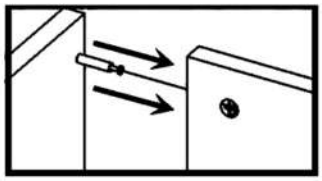

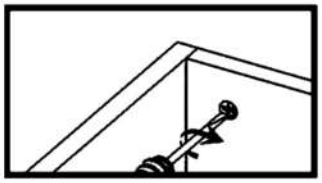

V12
GLUE

V69
L-125mm x2

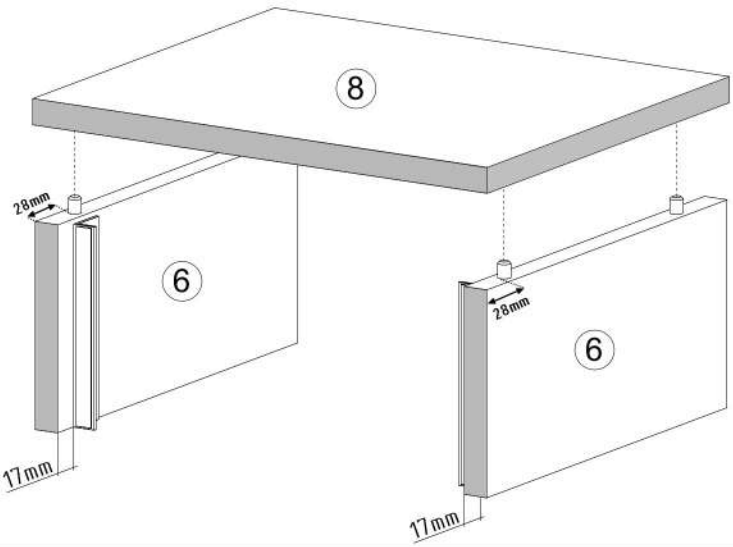

1.

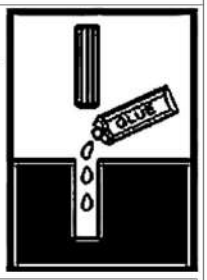

2.

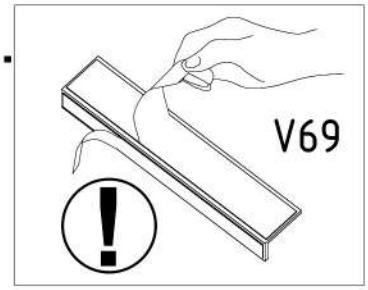

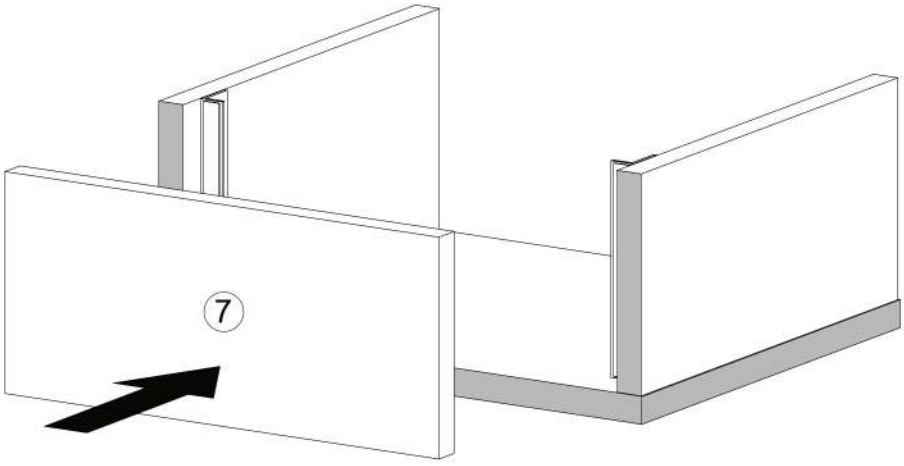

S8

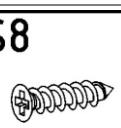

4x35mm x4

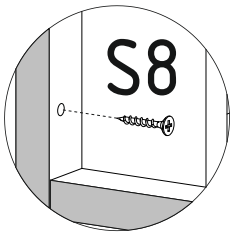

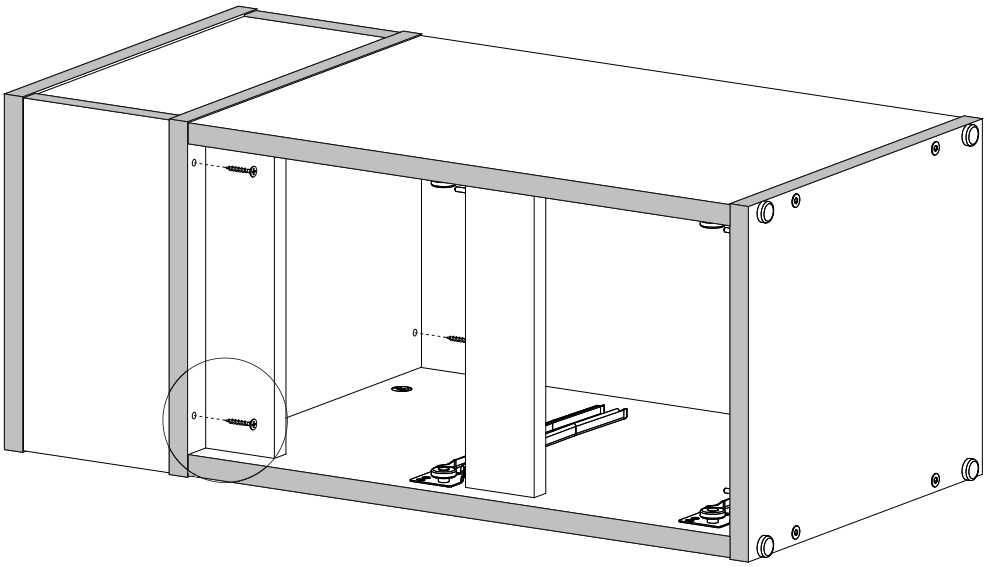

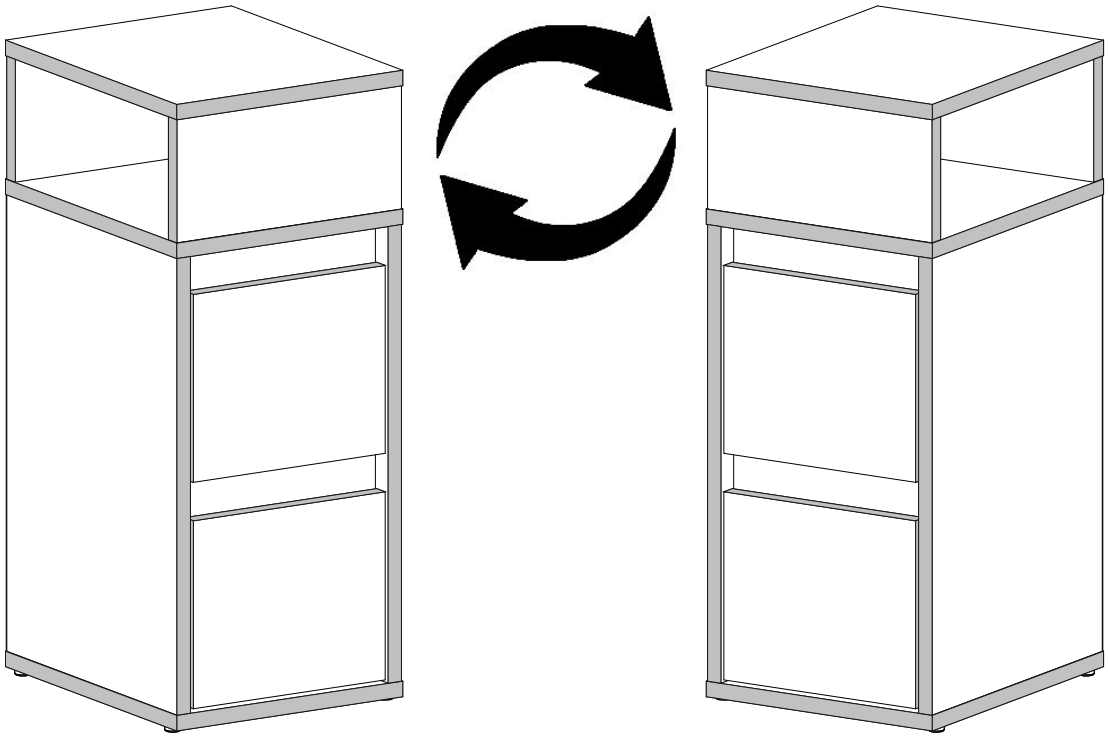

Z1

x28

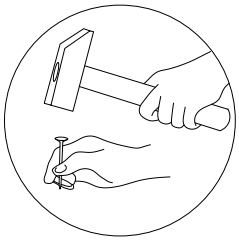

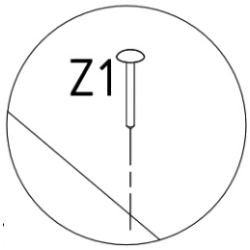

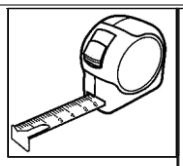

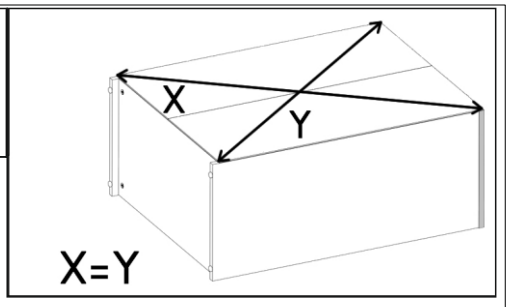

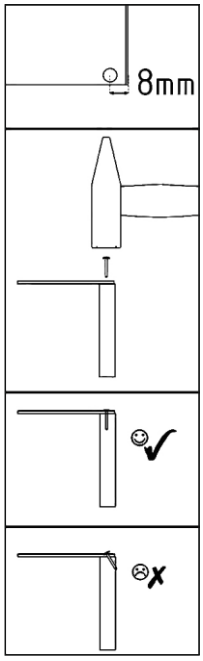

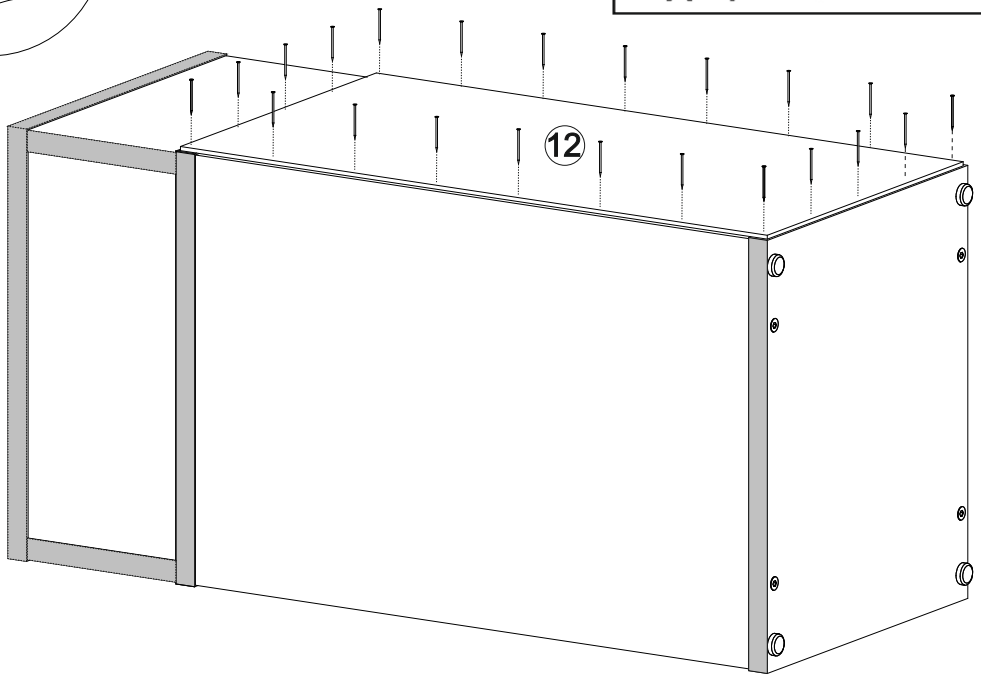

M1

12x15mm

x4

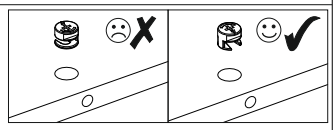

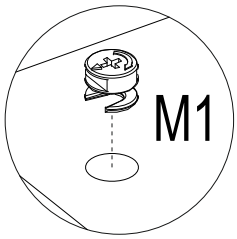

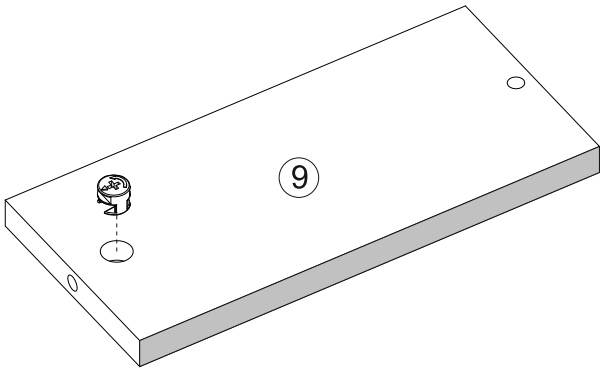

x4

F1

7x50mm

x4

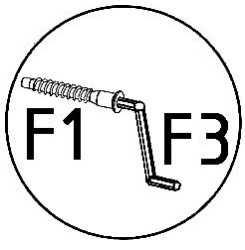

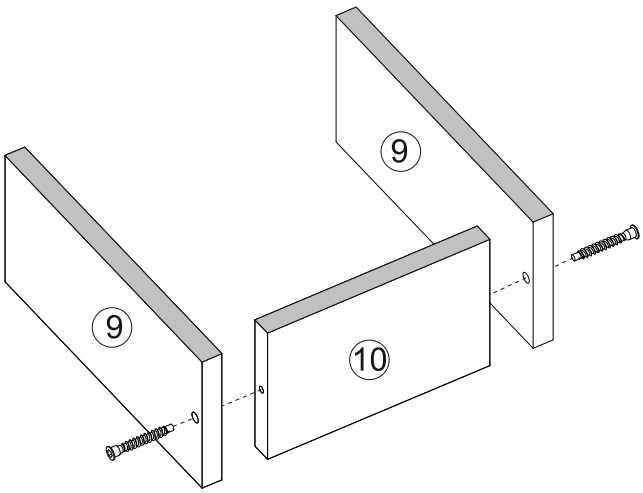

x2

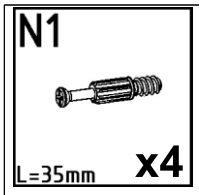

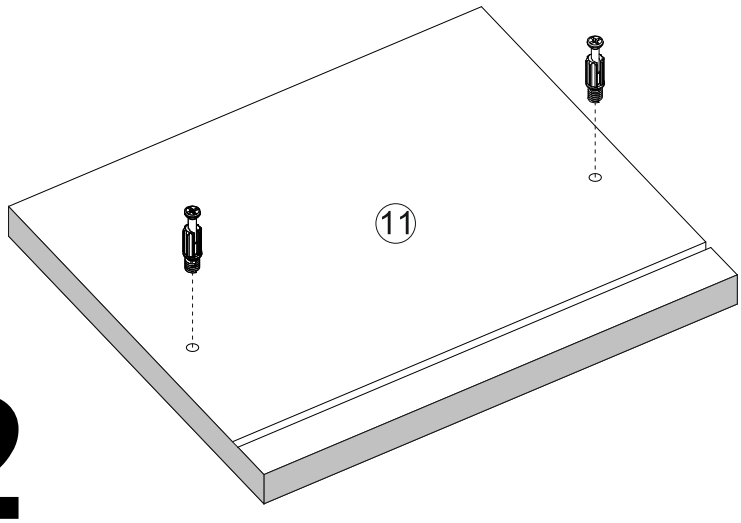

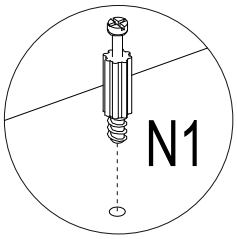

x2

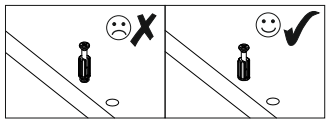

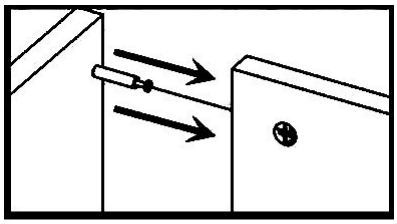

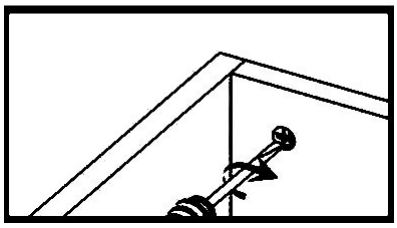

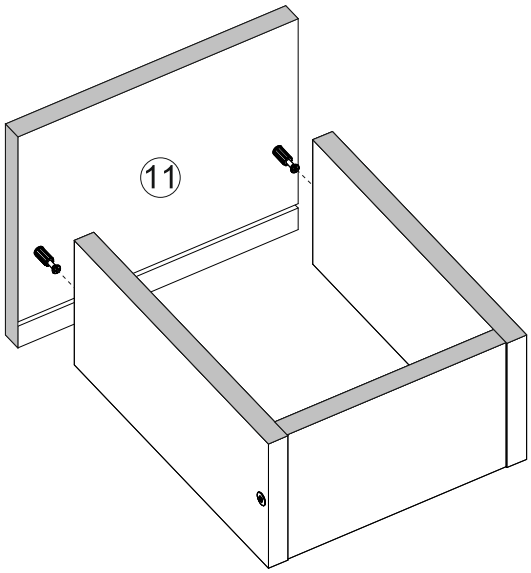

x2

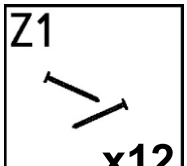

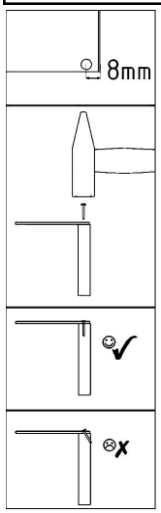

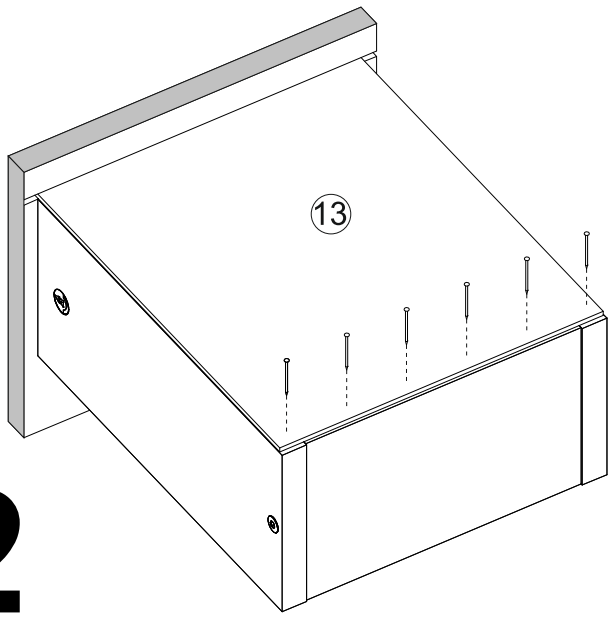

x2

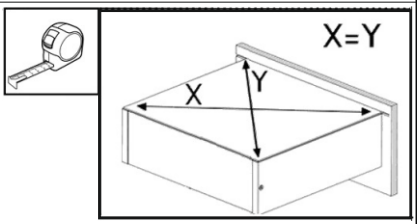

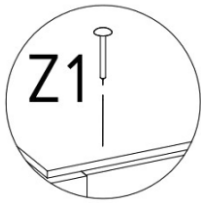

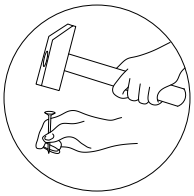

P1

L=250mm x2

S1

3,5x16mm x8

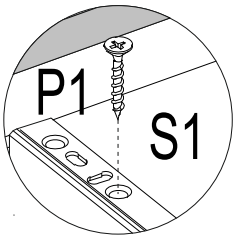

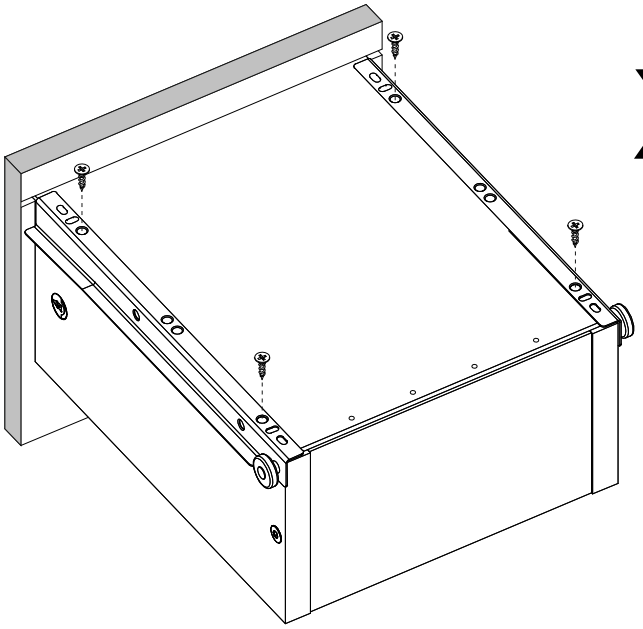

x2

B1

B
ø17/4mm x4

