INSTRUKCJA MONTAŻU

Komoda 150 cm z 2 szafkami i 3 szufladami na nóżkach

Kolor: Dąb Bookmatch

Kod produktu: OR10546



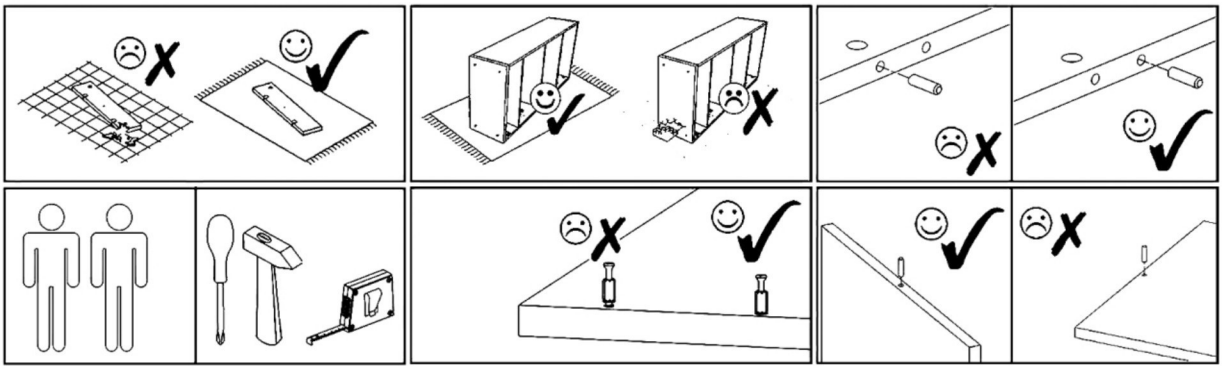

A1  ZP x2	A3  ZB x2	E1  8x30mm x16	N1  L=35mm x22	M1  12x15mm x22	V16  5x16mm x8	F1 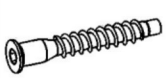 7x50mm x6	Z1  x80
R1  6x8mm x12	F3 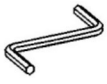 Hex 4mm x1	S1  3,5x16mm x35	B1  B ø17/4mm x6	S7  4x25mm x10	V13  x1	U19  L=152/128mm x5	T8  H=120mm x5
P3  L=350mm x3							

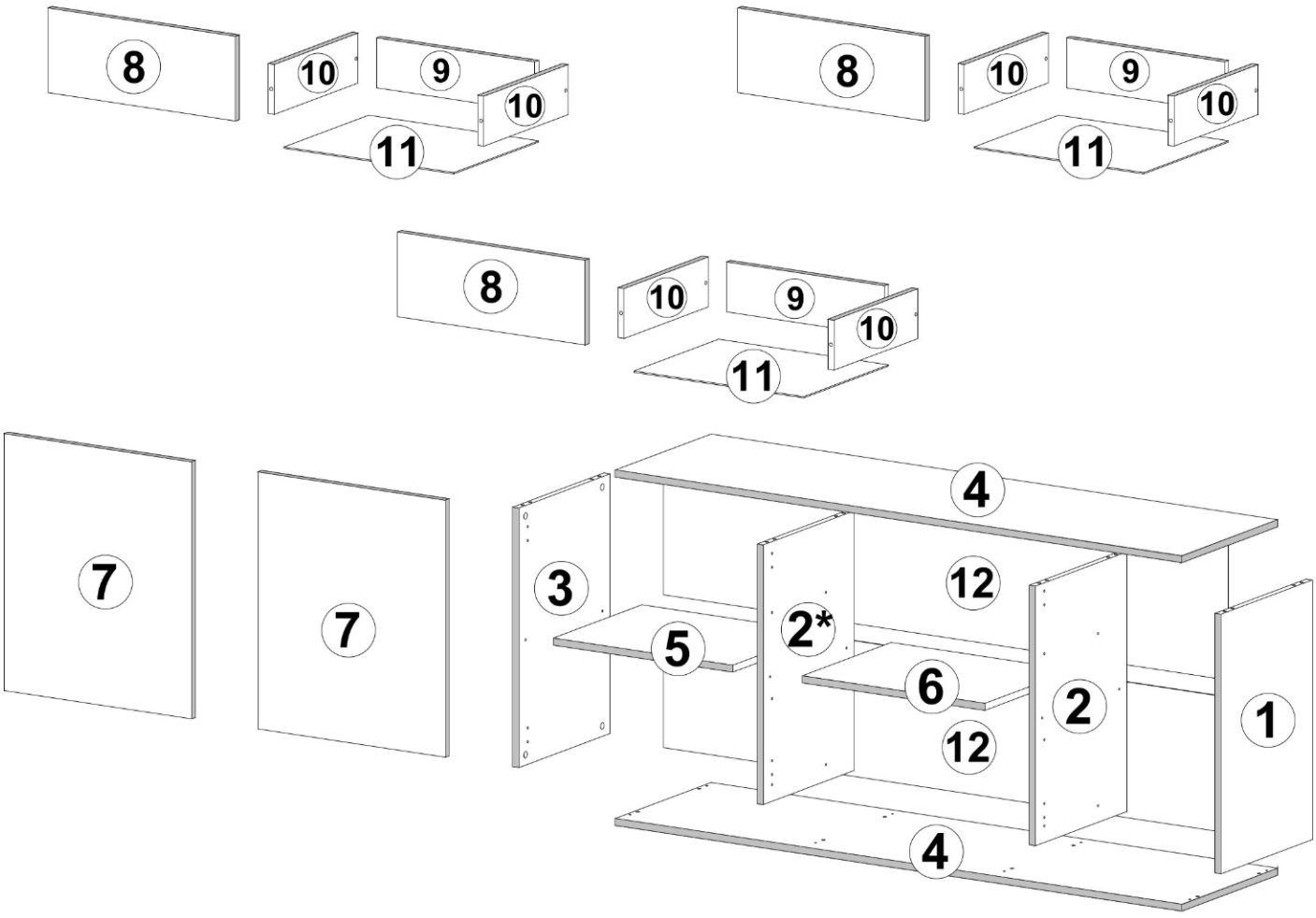

1	1	
2	1	
3	1	
4	2	
5	1	475x370
6	1	483x370
7	2	
8	3	
9	3	
10	6	
11	3	
12	2	
NUMBER	QUANTITY	

E1	V16	M1	R1	P3
8x30mm x8	5x16mm x2	12x15mm x8	6x8mm x6	L=350mm x3

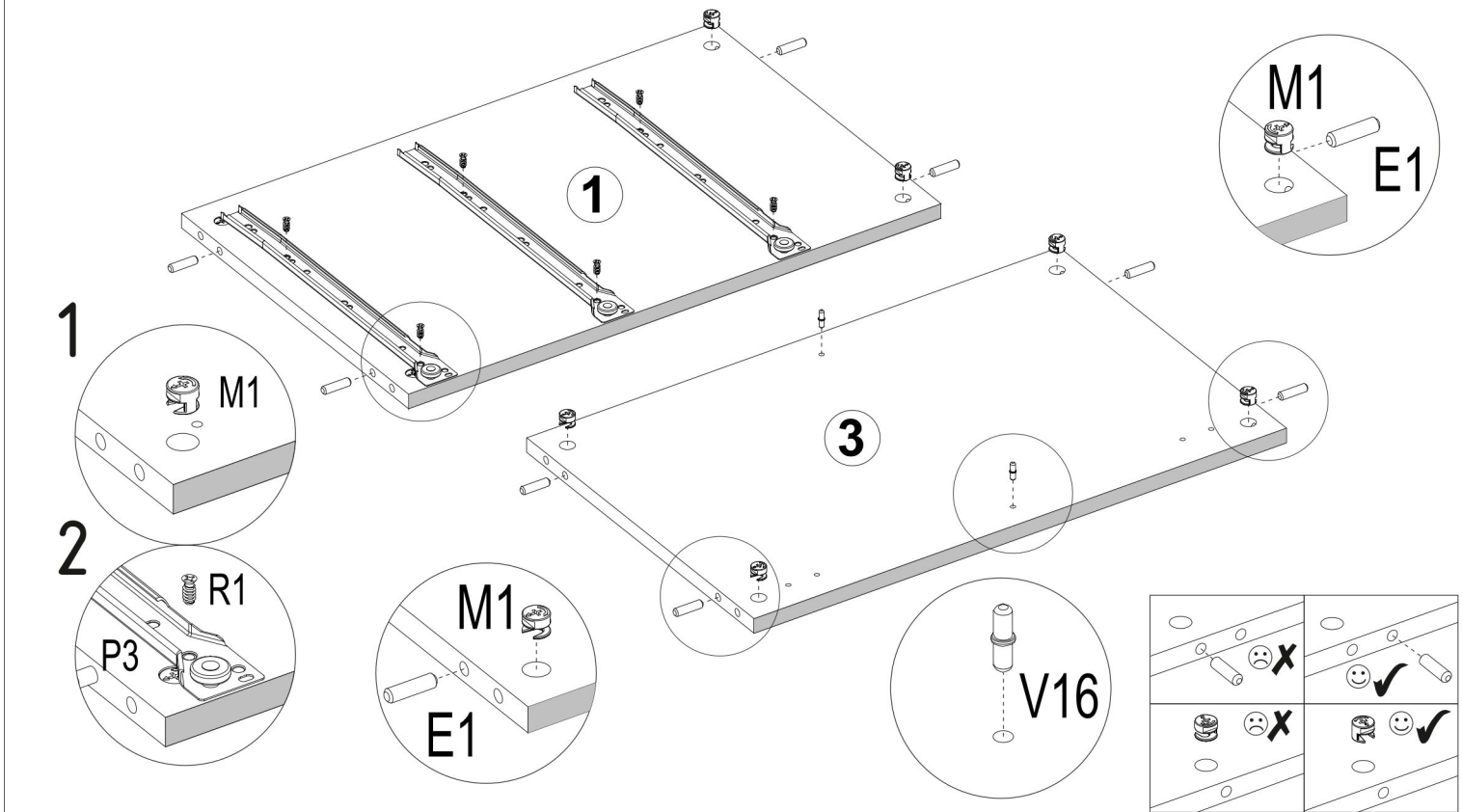

E1	V16	M1	R1	P3
8x30mm x4	5x16mm x2	12x15mm x4	6x8mm x6	L=350mm x3

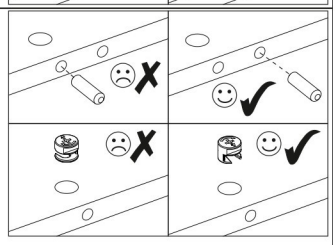

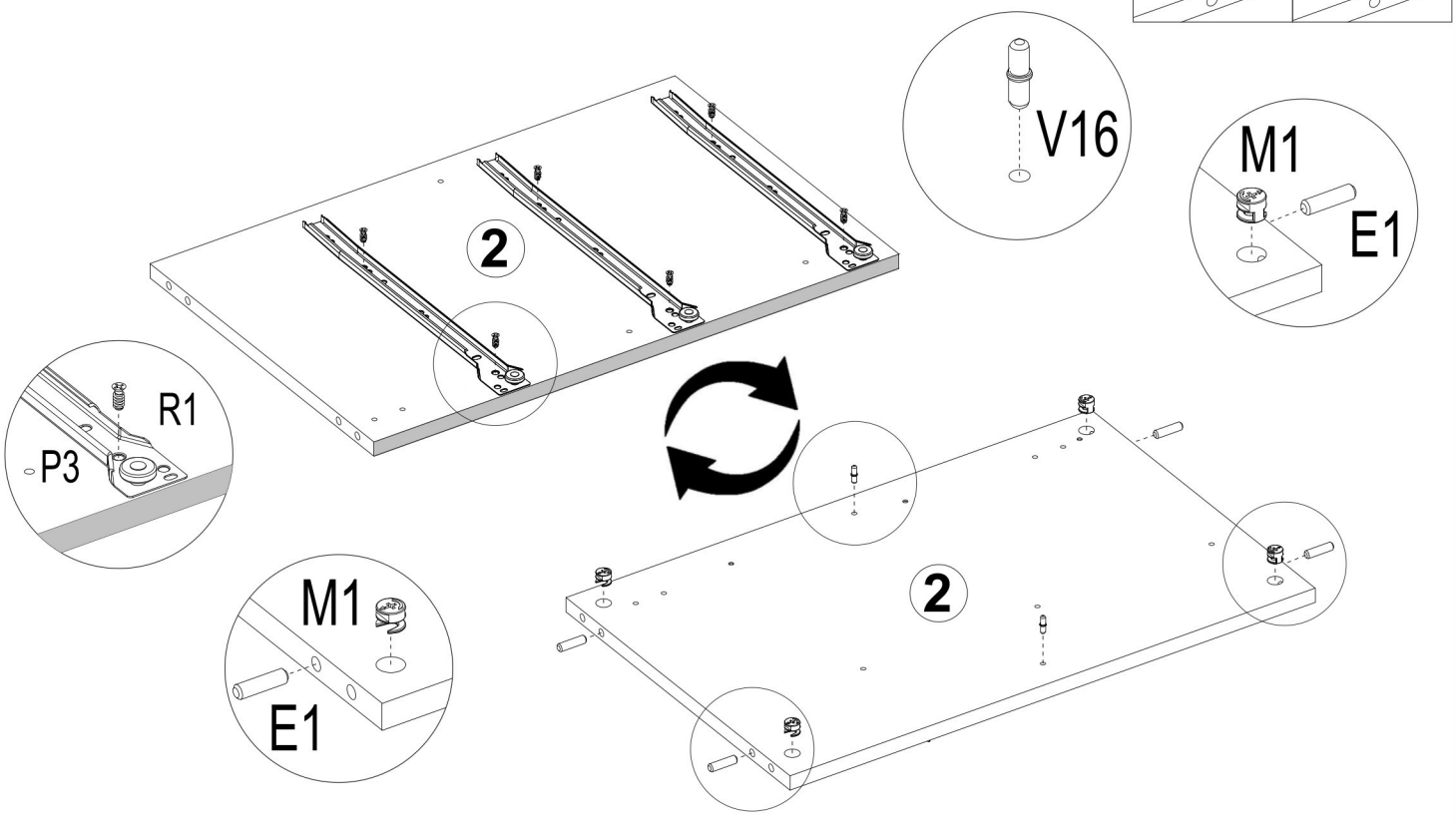

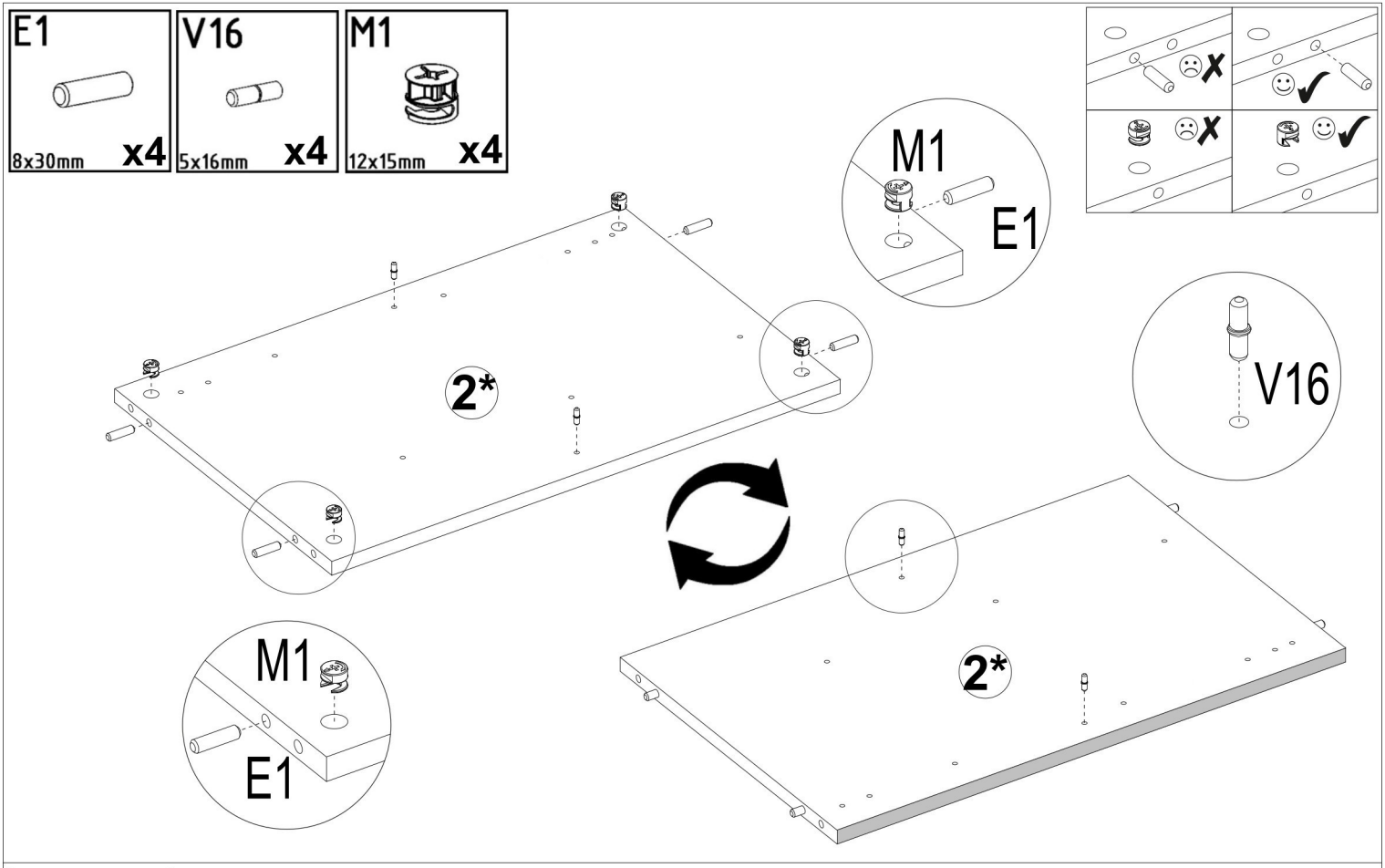
E1
8x30mm x4
V16
5x16mm x4
M1
12x15mm x4
M1
E1
2*
V16
M1
E1
2*

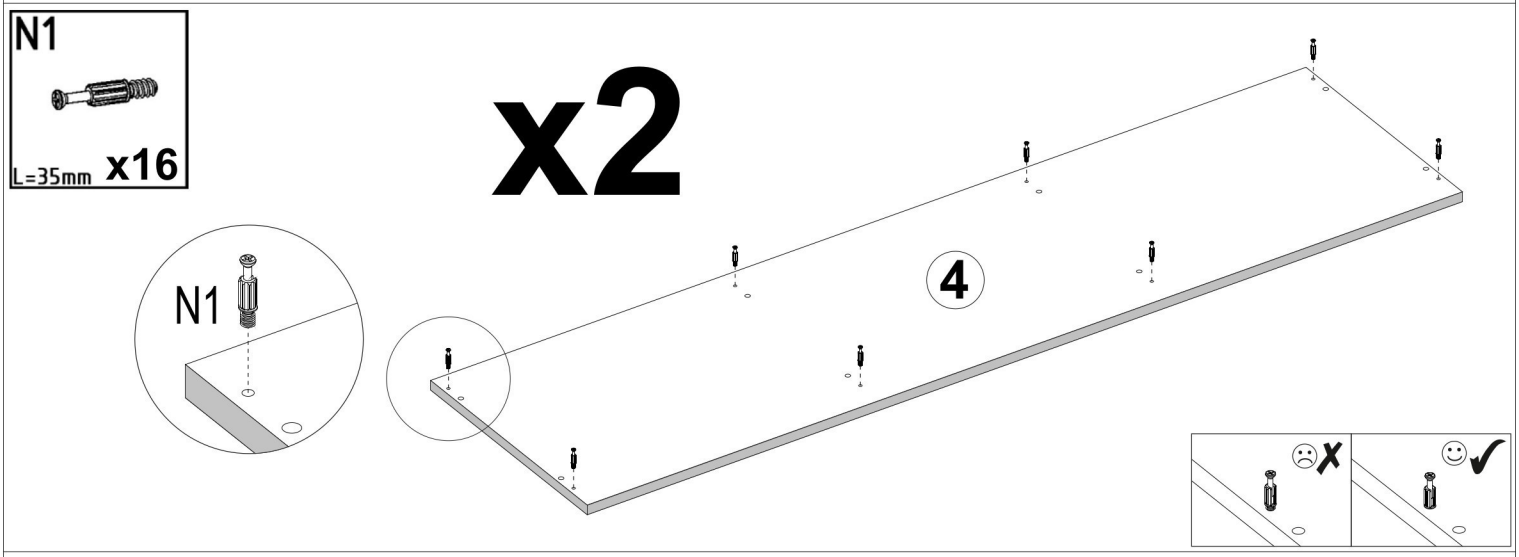
N1
L=35mm x16
x2
N1
4

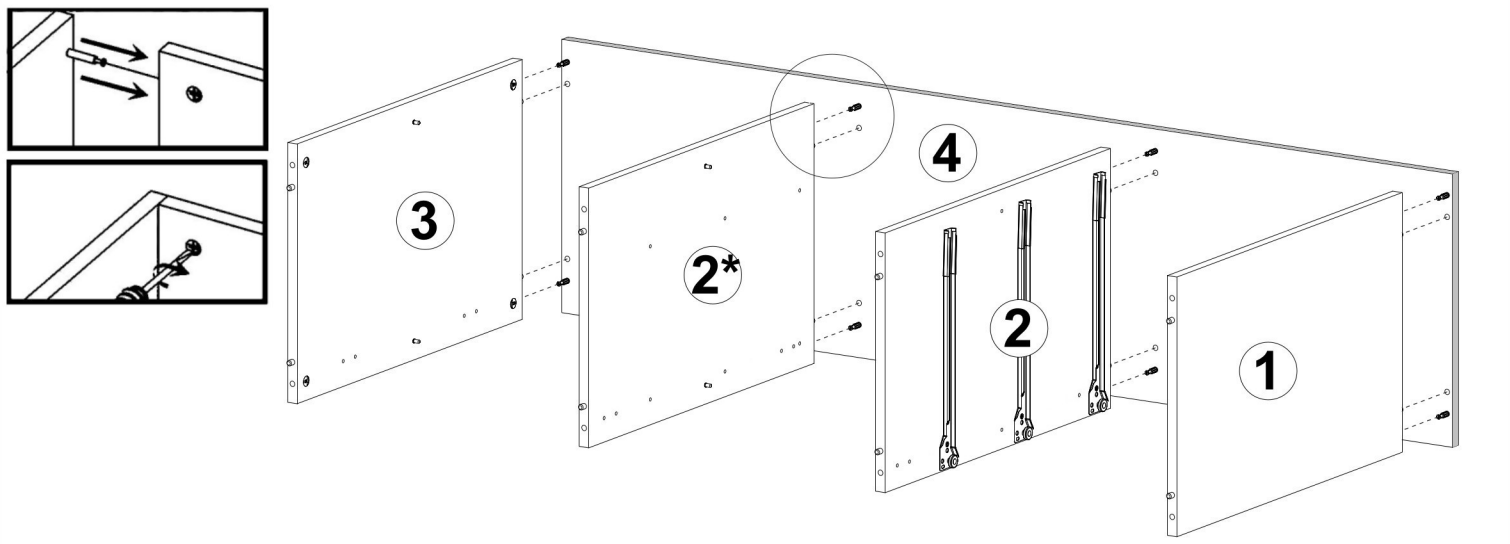
3
2*
4
2
1

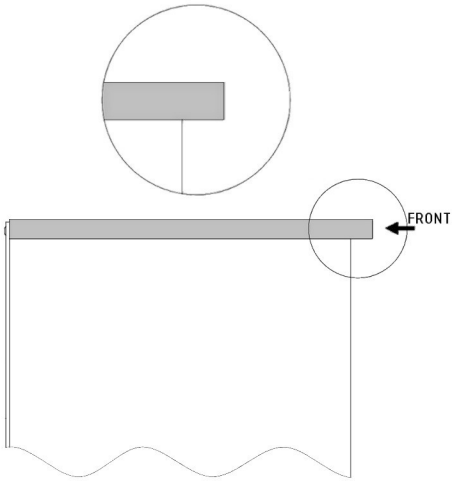
FRONT

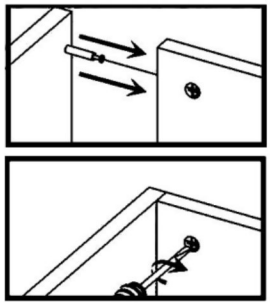

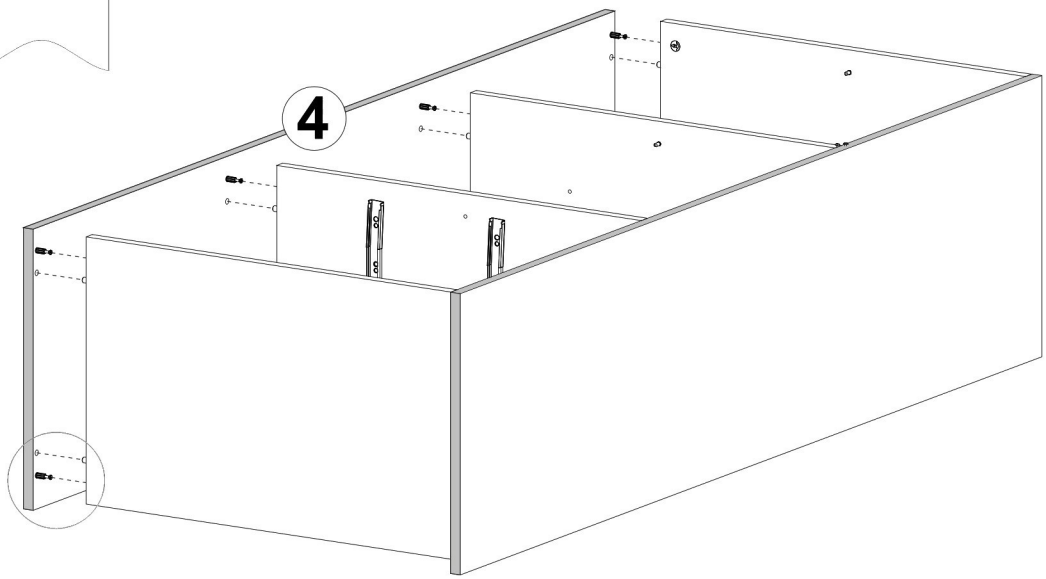
4

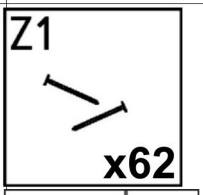
Z1
x62

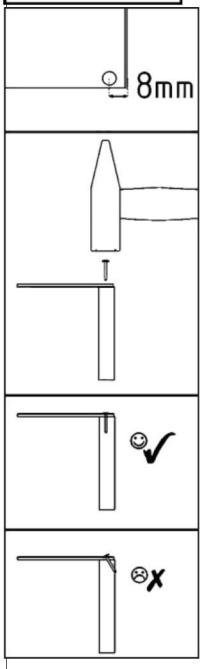
8mm

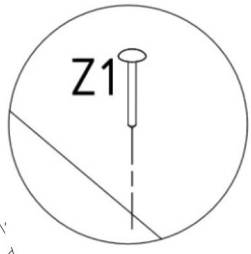
Z1

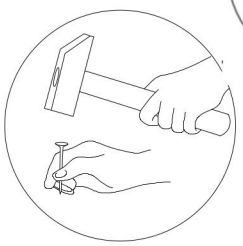

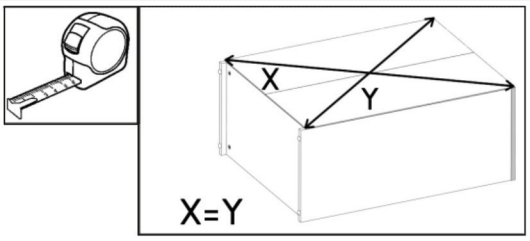
X
Y
X=Y

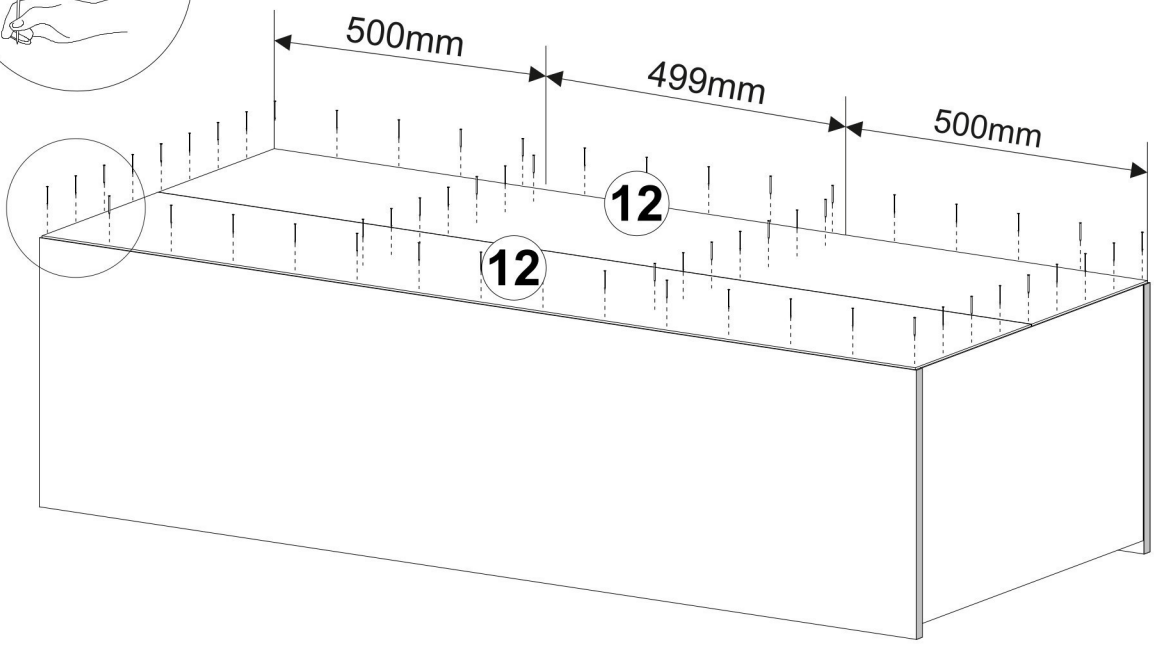
500mm
499mm
500mm
12
12

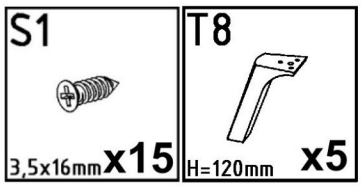
S1
3,5x16mm x15
T8
H=120mm x5

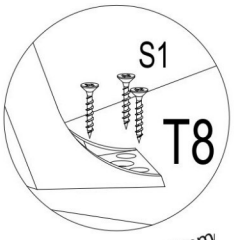
S1
T8

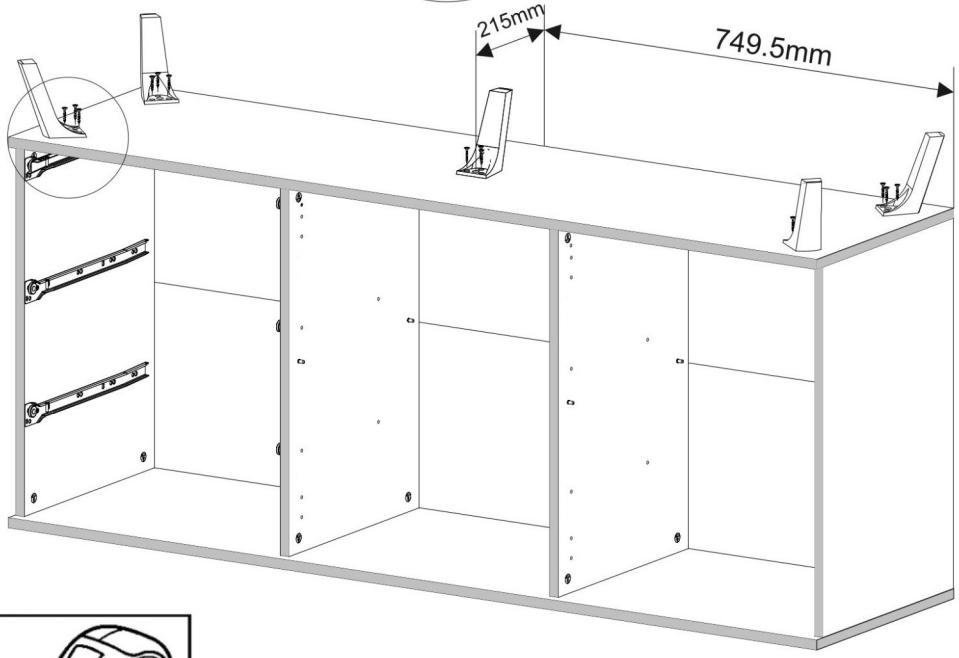
215mm
749.5mm

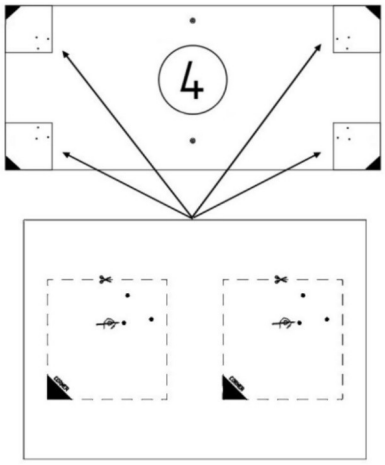
4

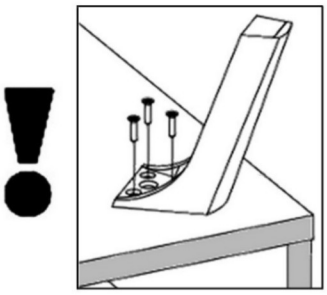

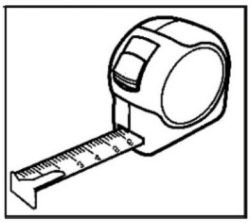

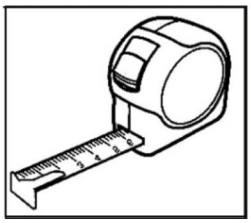

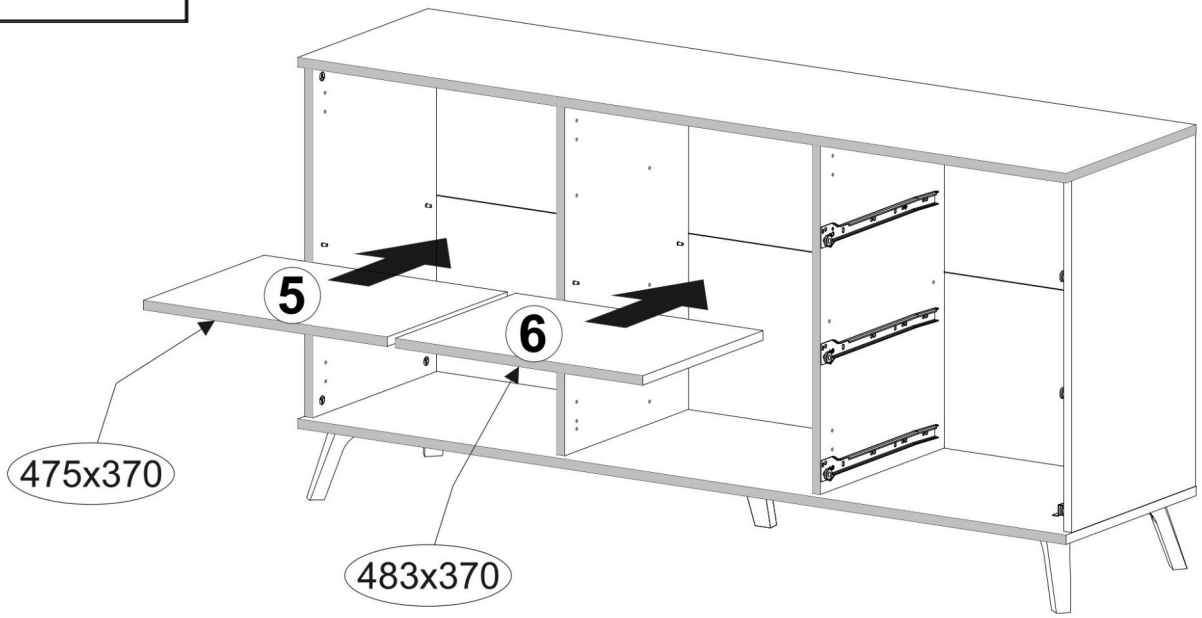
5
6
475x370
483x370

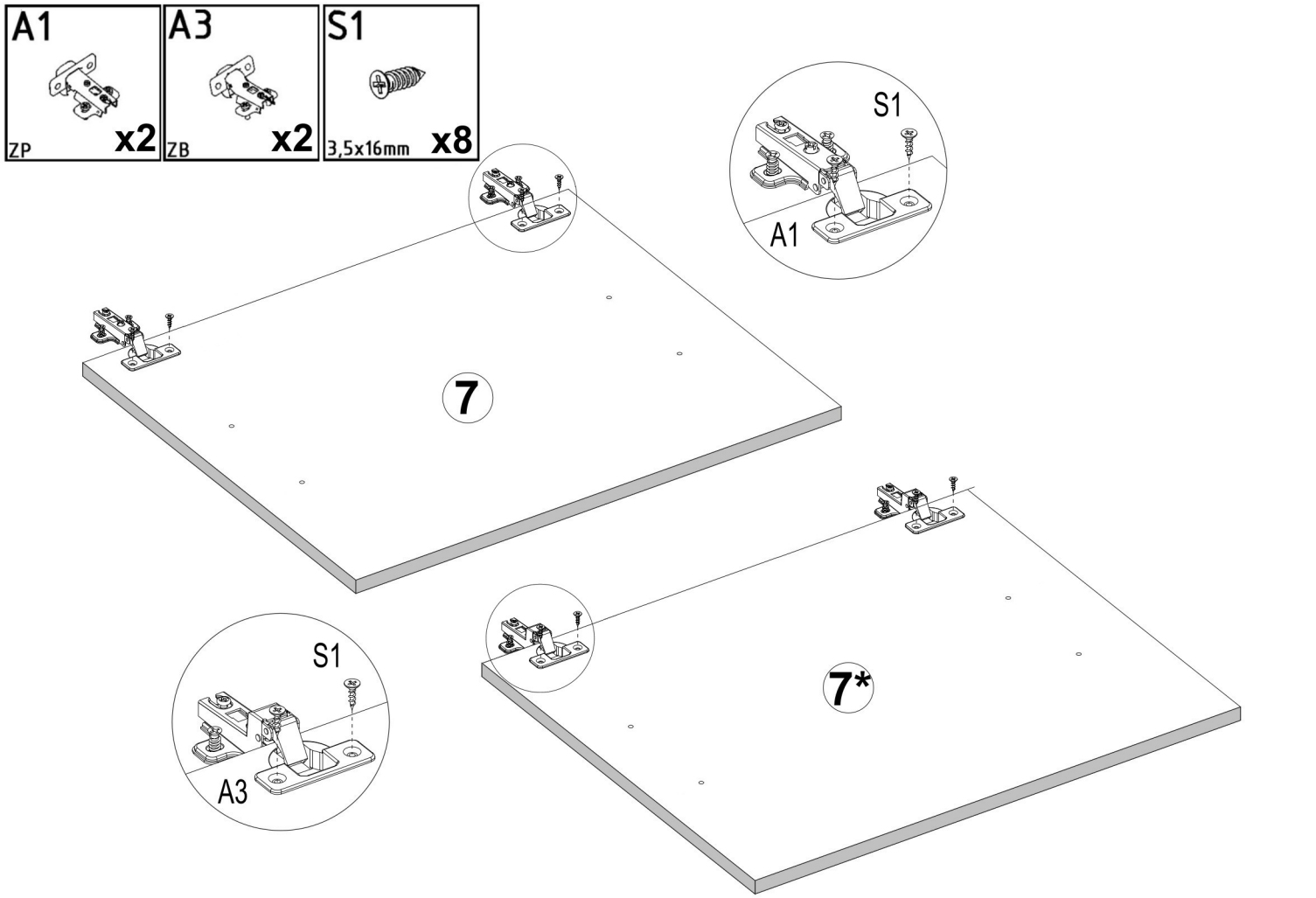
A1
ZP
x2
A3
ZB
x2
S1
3,5x16mm
x8
S1
A1
7
7*
S1
A3

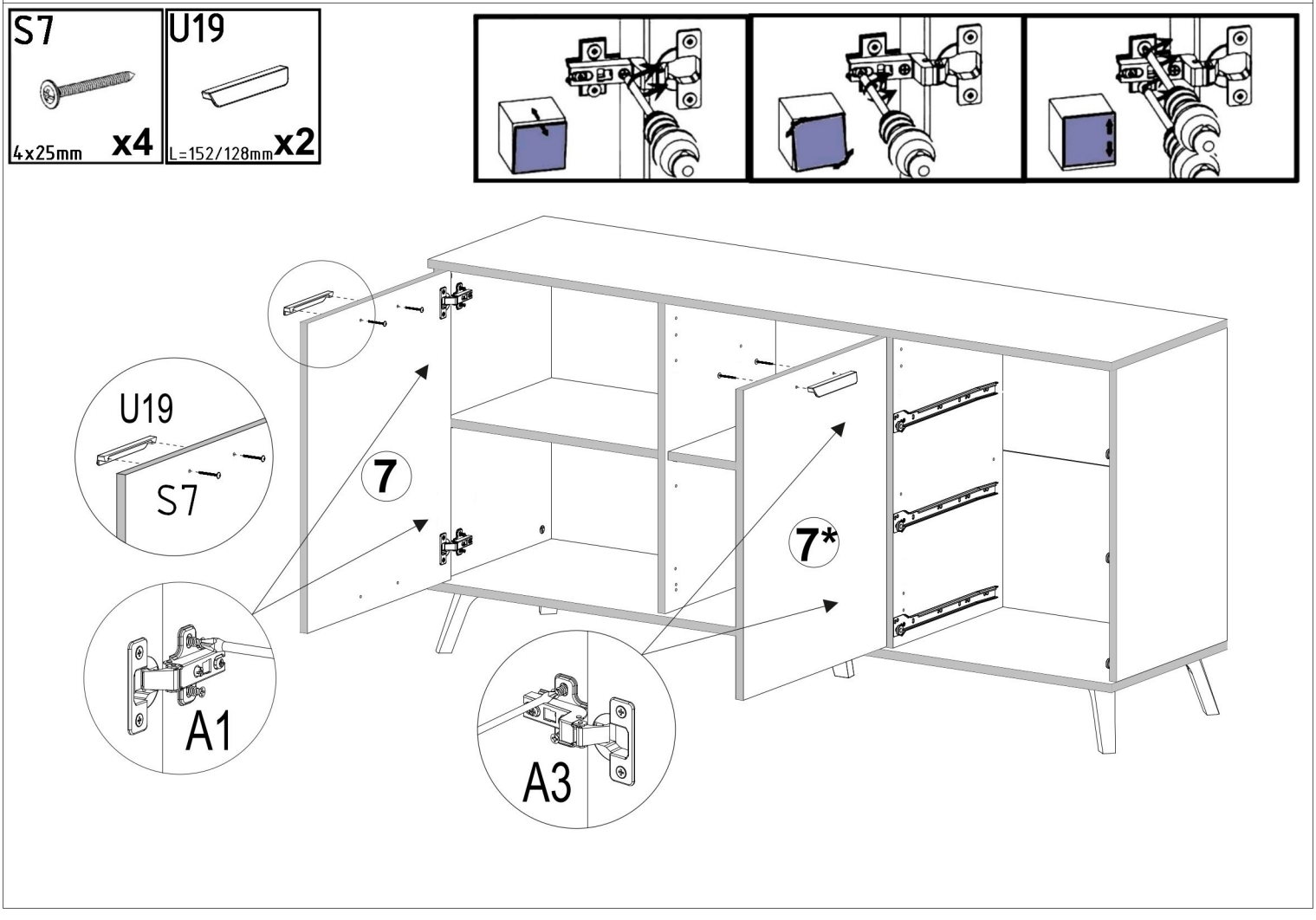
S7
4x25mm
x4
U19
L=152/128mm
x2
U19
S7
7
7*
A1
A3

M1



12x15mm x6

x6

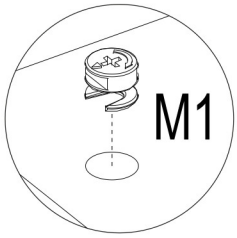

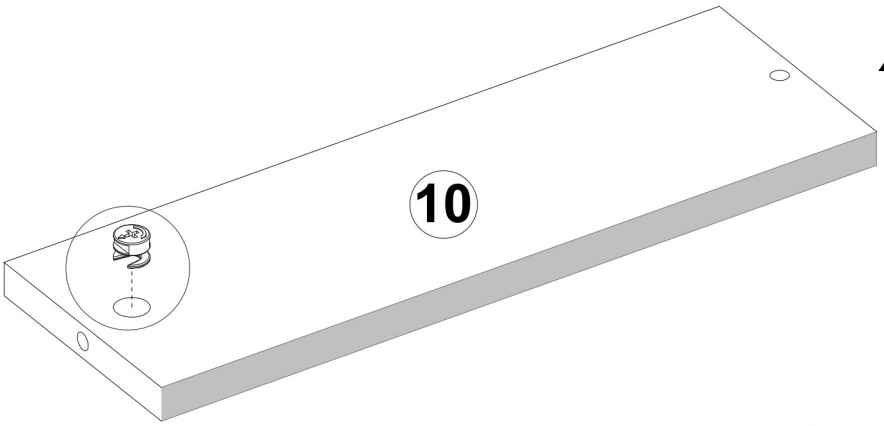

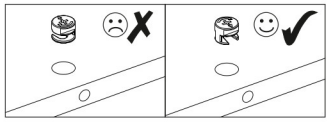

F1

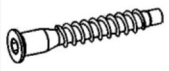

7x50mm x6

F3

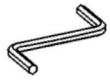

Hex 4mm x1

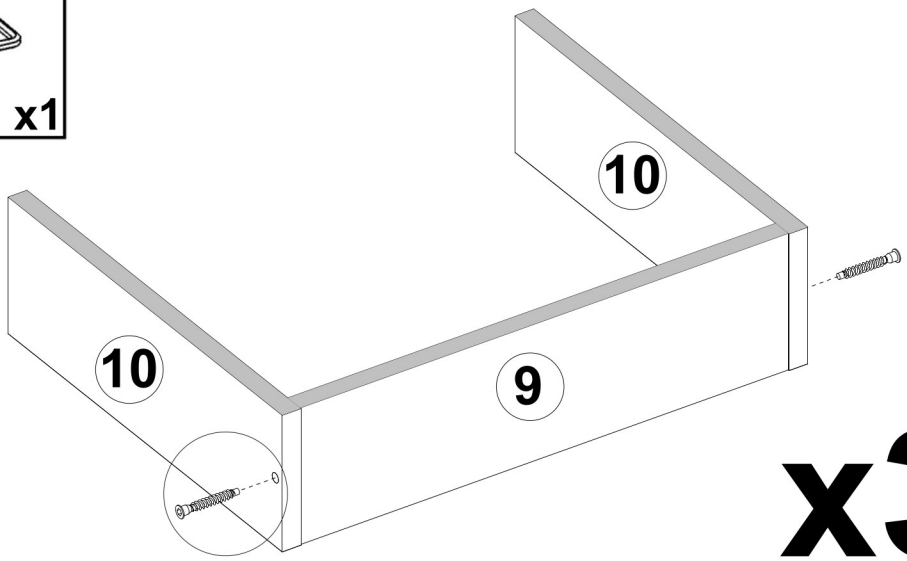

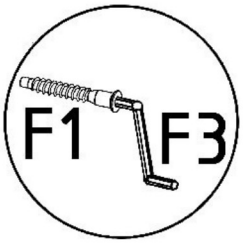

x3

N1



L=35mm x6

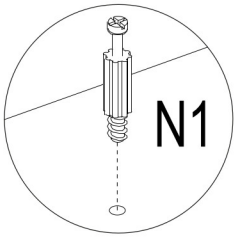

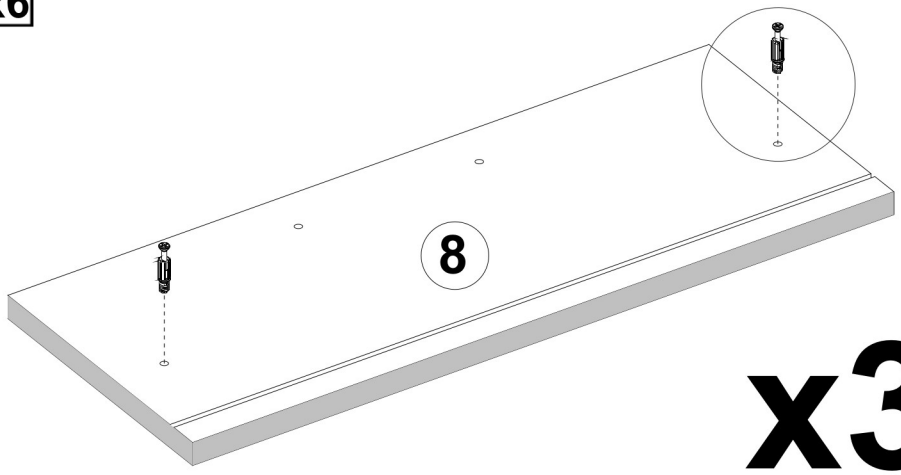

x3

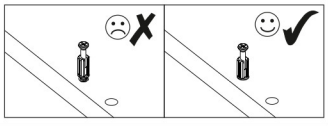

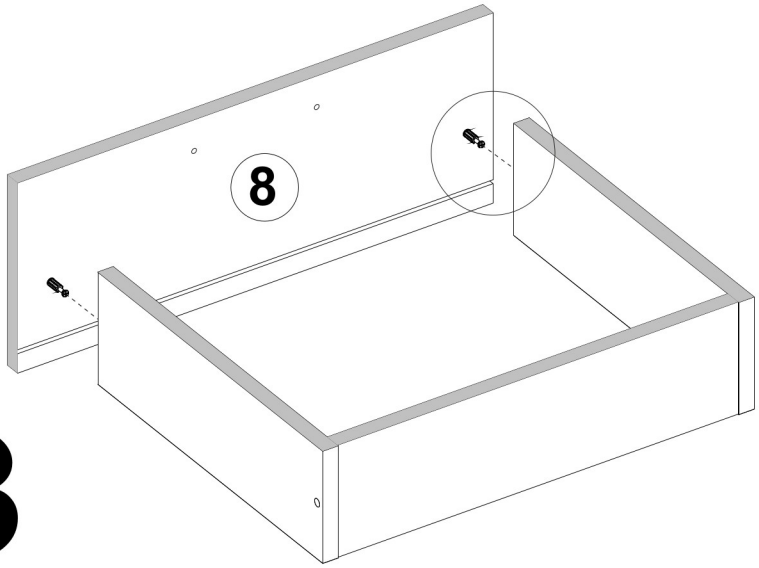

x3

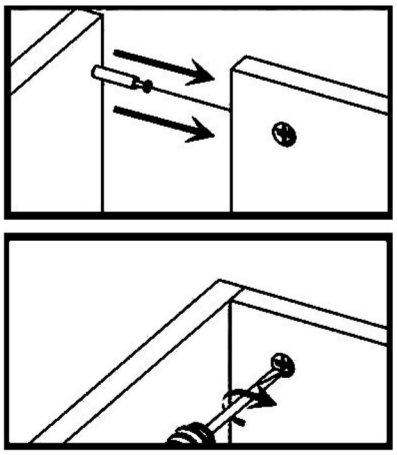

Z1

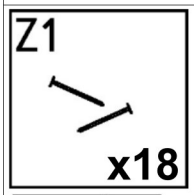

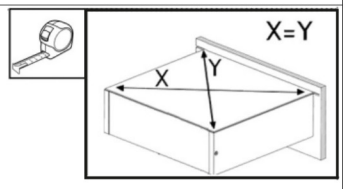

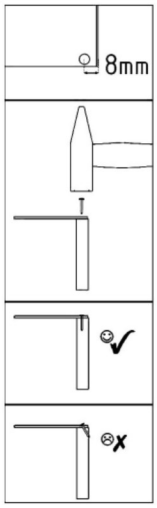

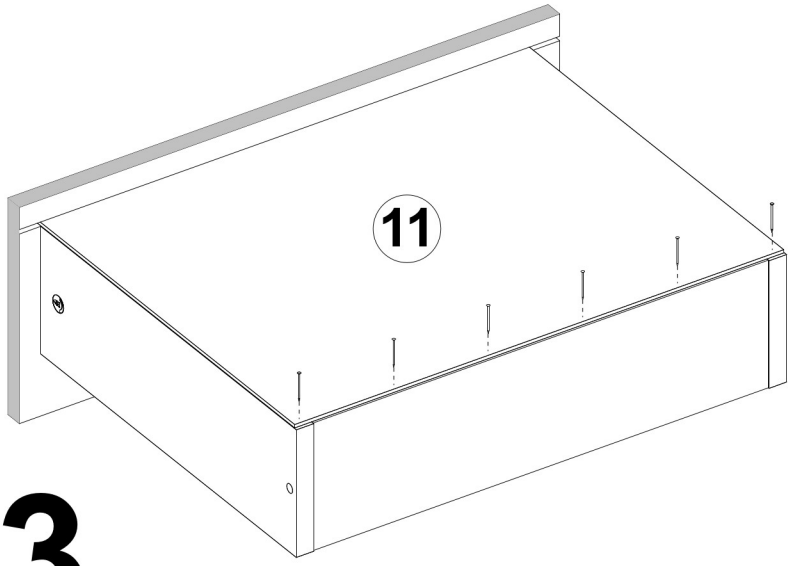

x3

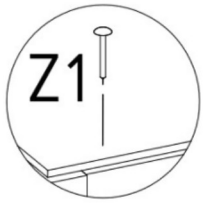

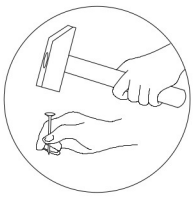

P3



S1



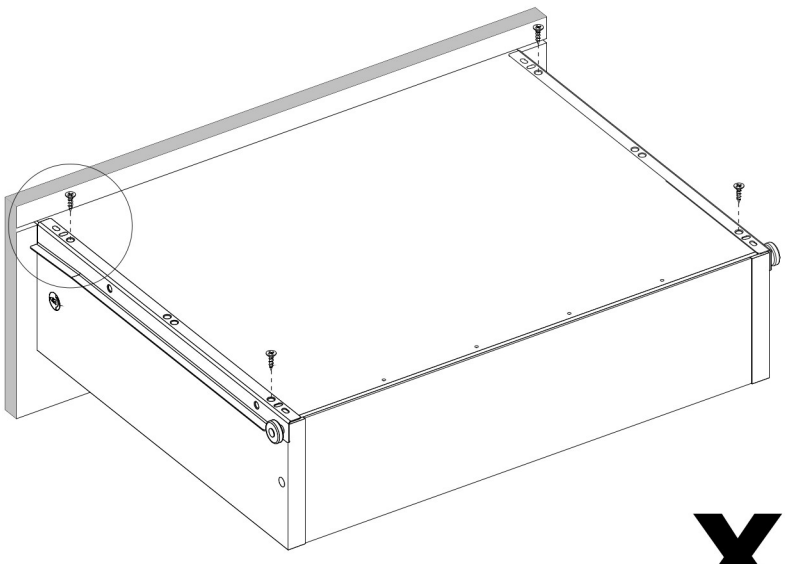

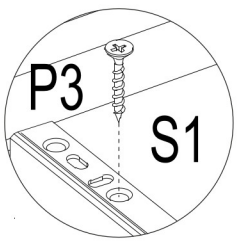

x3

S7
4x25mm x6

U19
L=152/128mm x3

x3

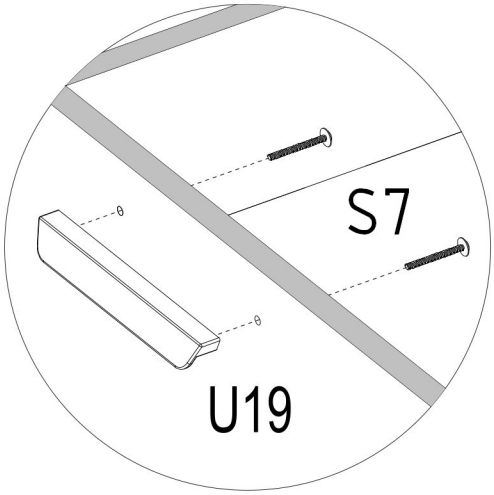

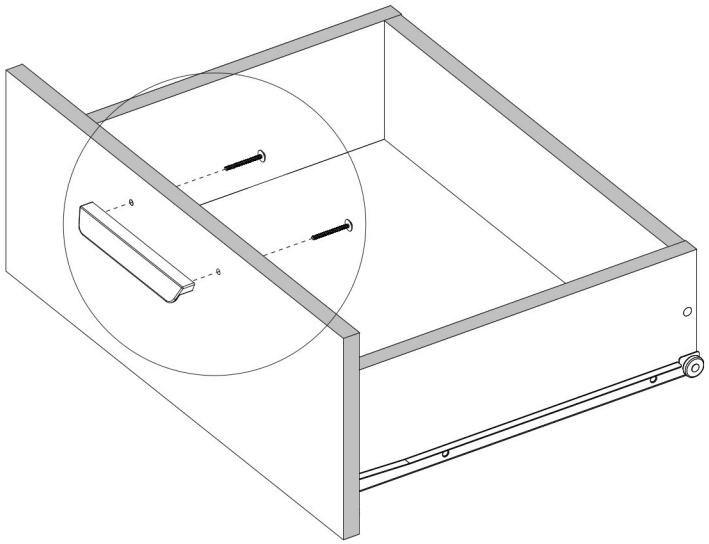

V13
x1

B1
B
ø17/4mm x6

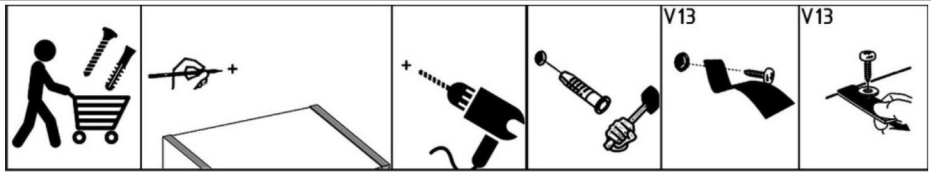

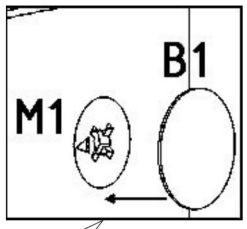

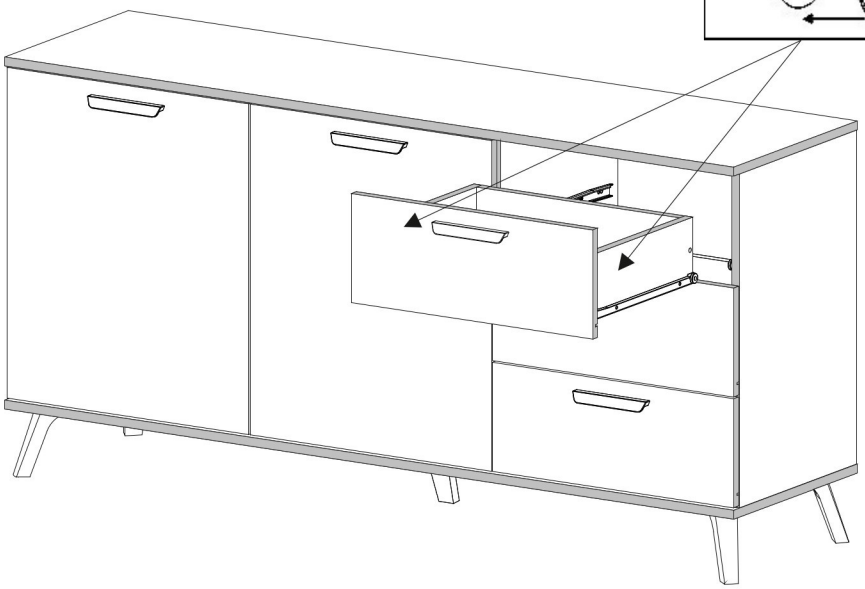

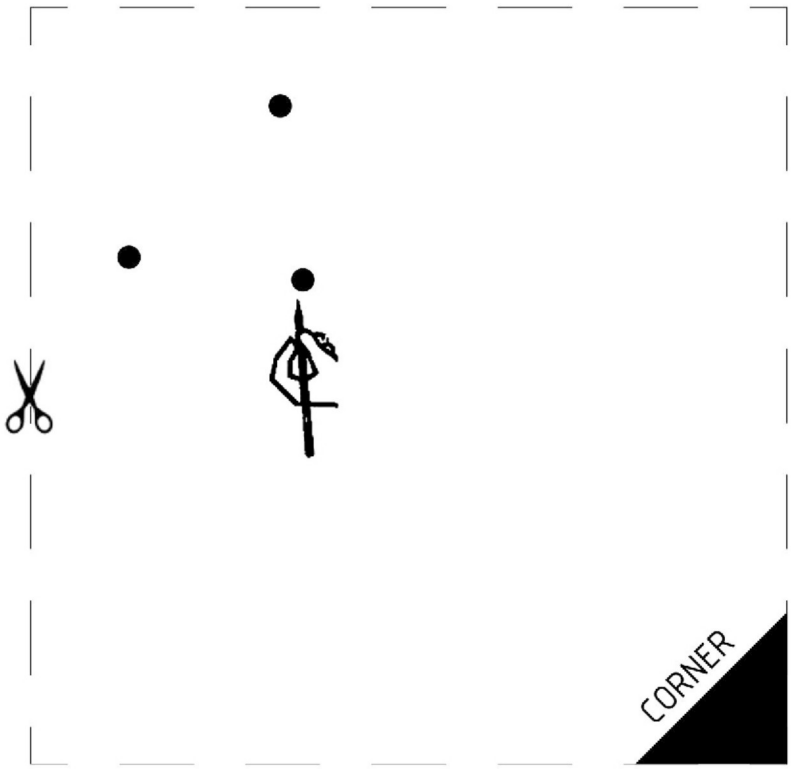
CORNER

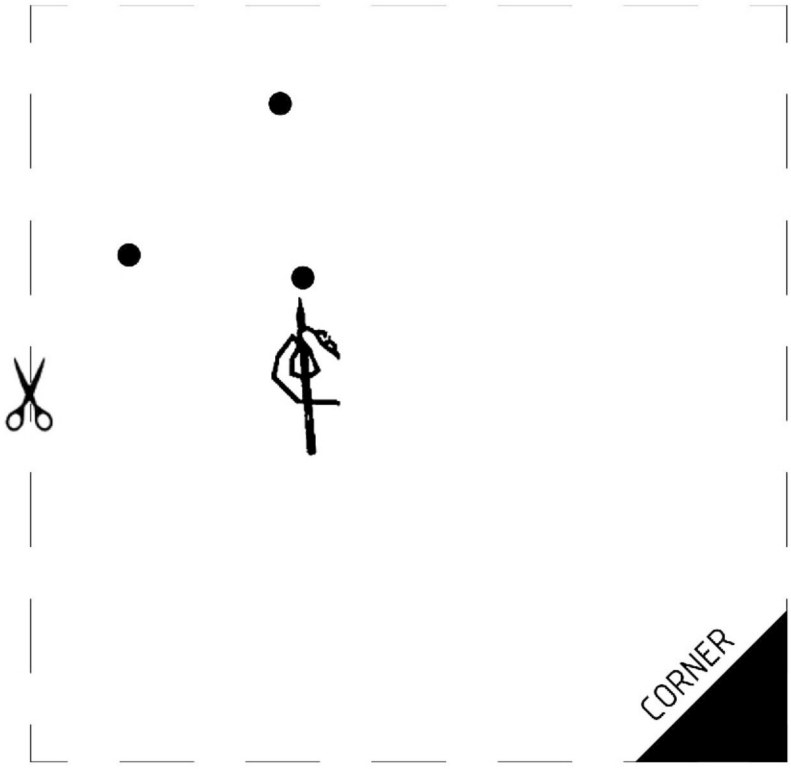
CORNER