INSTRUKCJA MONTAŻU

Szafa 160 cm z lustrem, półkami i drążkiem, 205 cm

Kolor: Dąb Sonoma

Kod produktu: OR10184





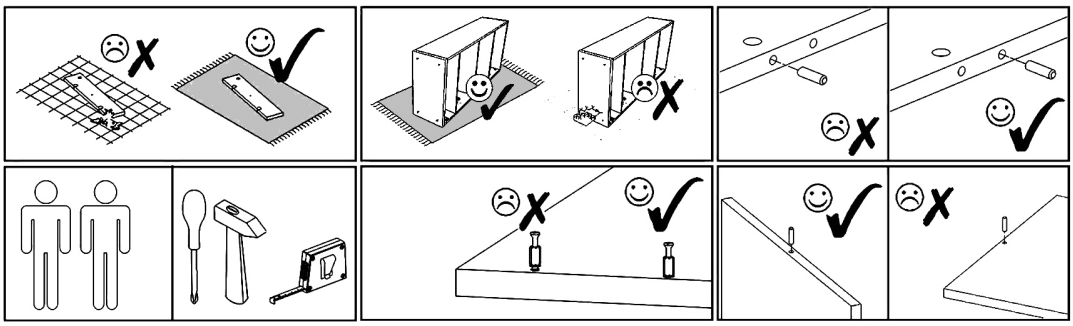

B2 K ø12/4mm x8	B2 Ant. ø12/4mm x8	B2 B ø12/4mm x8	V32 L=1529mm x1	A3 ZB x6				
V19 x2	V16 5x16mm x16	F2 7x35mm x4	F1 7x50mm x20	B1 B ø17/4mm x4	V41 x1	Z1 x180	B2 S-A ø12/4mm x8	
S1 3,5x16mm x48	T1 x8	P4 L=400mm x2	R7 4x27mm x12	U6 CZ L=208/160mm x6	V15 x30	V25 x4	V8 L=773mm x1	
A1 ZP x8	E1 8x30mm x28	E3 8x50mm x8	R1 6x8mm x8	F3 Hex 4mm x1	M1 12x15mm x28	N1 L=35mm x12	N4 L=62mm x8	

IM250219

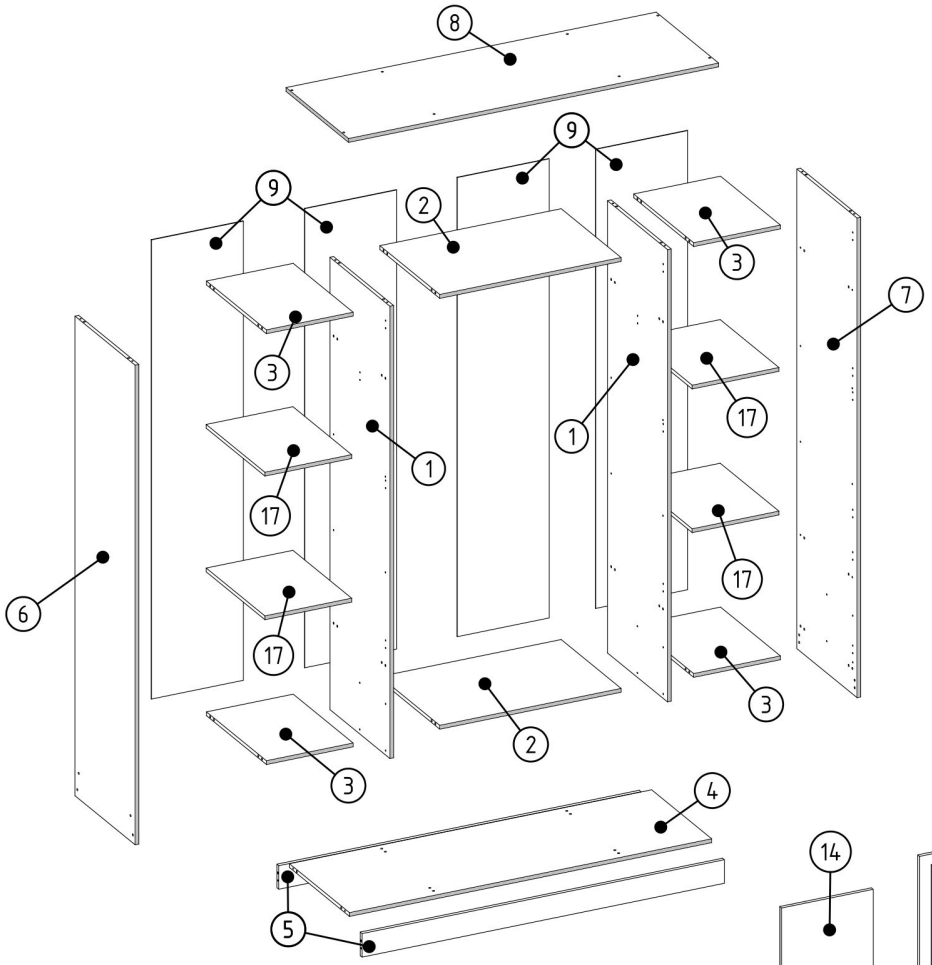

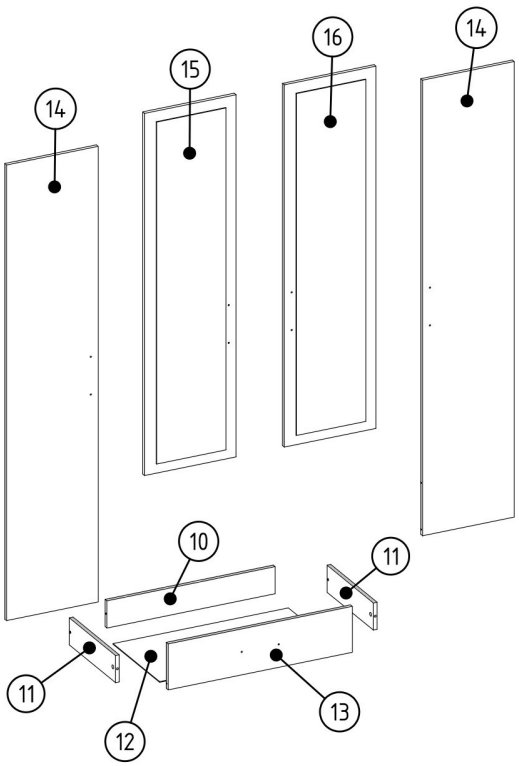

001524	17	4
001532	16	1
001556	15	1
001533	14	2
001555	13	2
001551	12	2
000083	11	4
001550	10	2
001525	9	4
001553	8	1
001535	7	1
001536	6	1
001557	5	2
001554	4	1
001527	3	4
001552	2	2
001530	1	2
ID	NUMBER	QUANTITY

S1	E1	V16	P4	R1	V19
3,5x16mm x1	8x30mm x4	5x16mm x4	L=400mm x2	6x8mm x4	x1

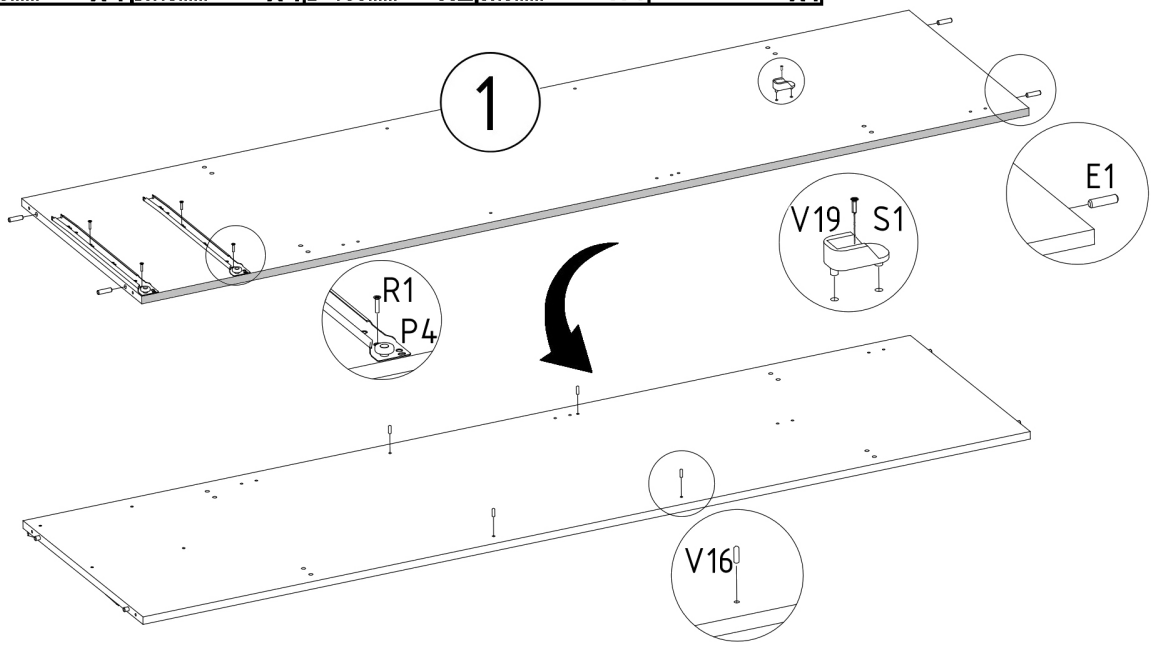

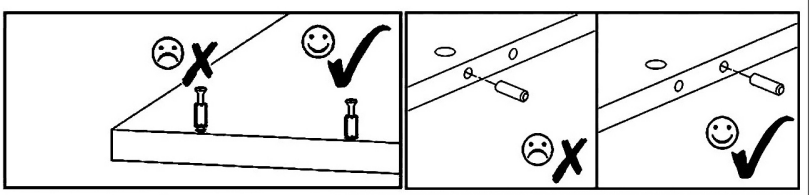

S1	E1	V16	P4	R1	V19
3,5x16mm x1	8x30mm x4	5x16mm x4	L=400mm x2	6x8mm x4	x1

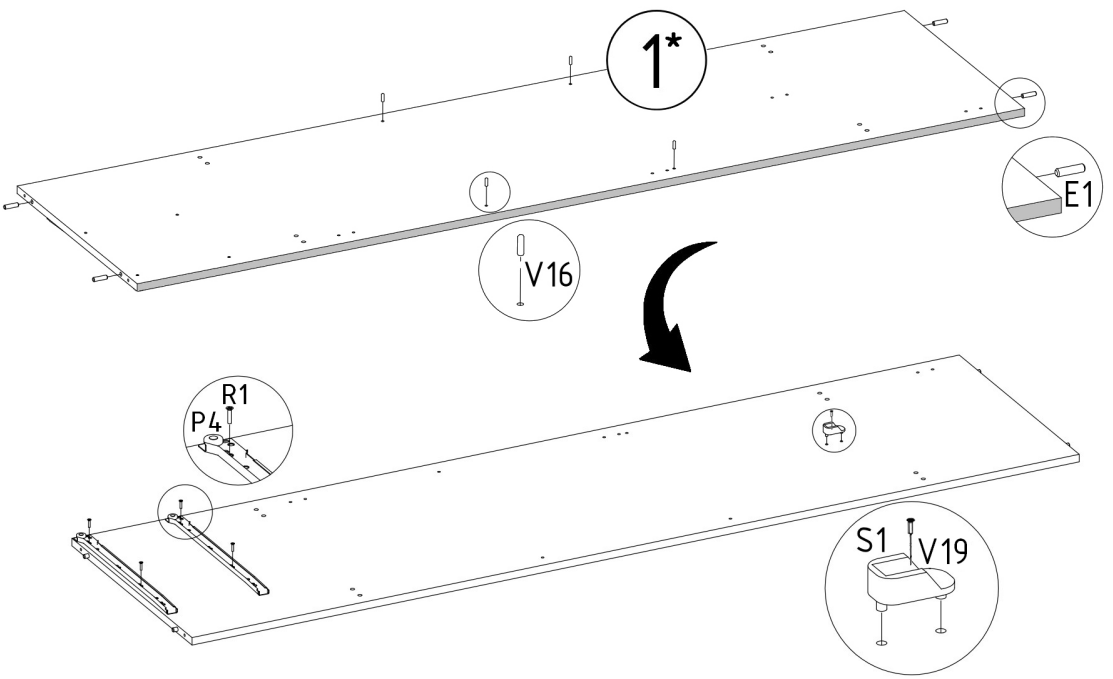

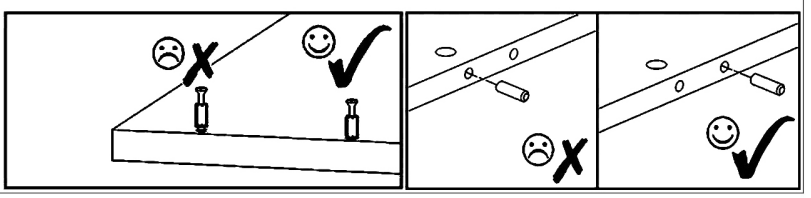

M1



12x15mm x8

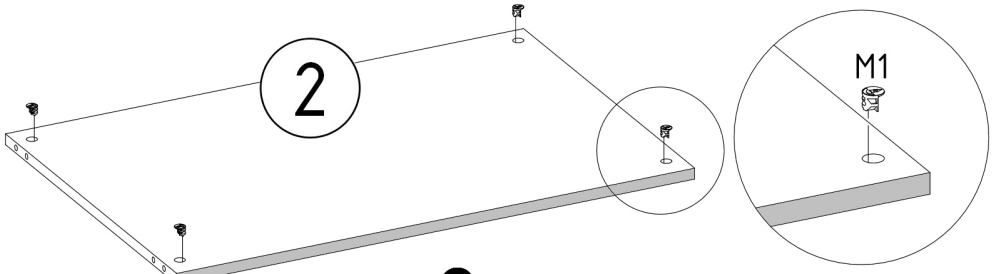

x2

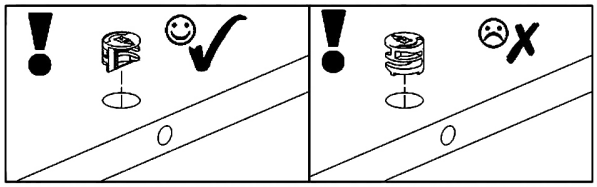

M1



12x15mm x16

E1



8x30mm x8

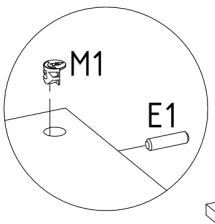

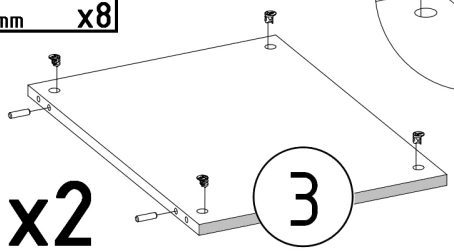

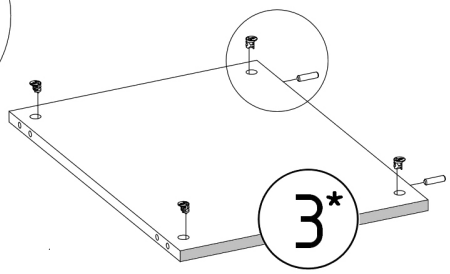

x2

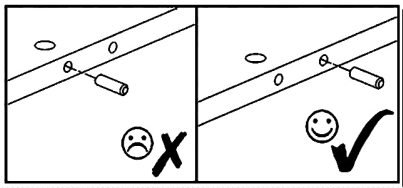

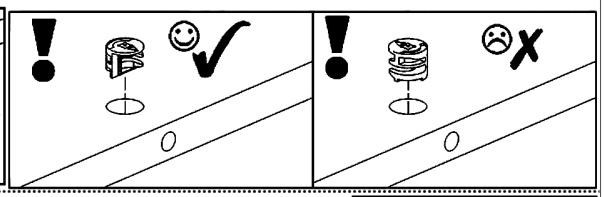

N4



L=62mm x8

E3

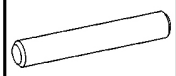

8x50mm x8

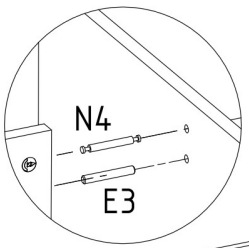

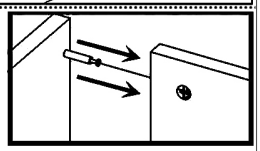

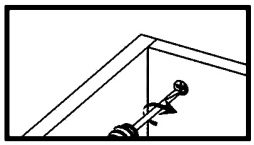

E1



8x30mm x4

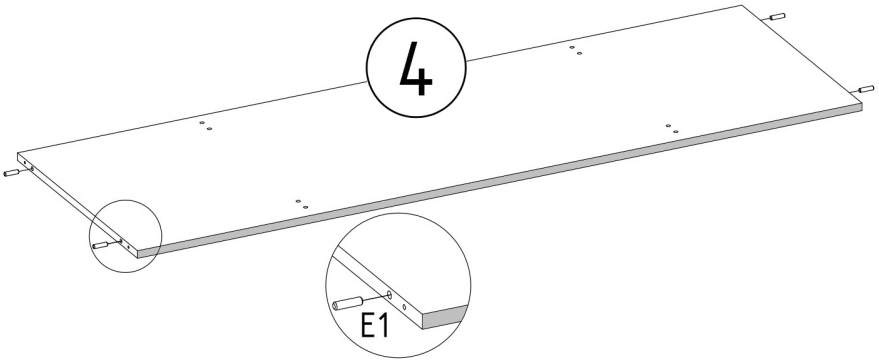

F2

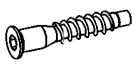

7x35mm x4

F3

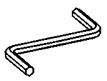

Hex 4mm

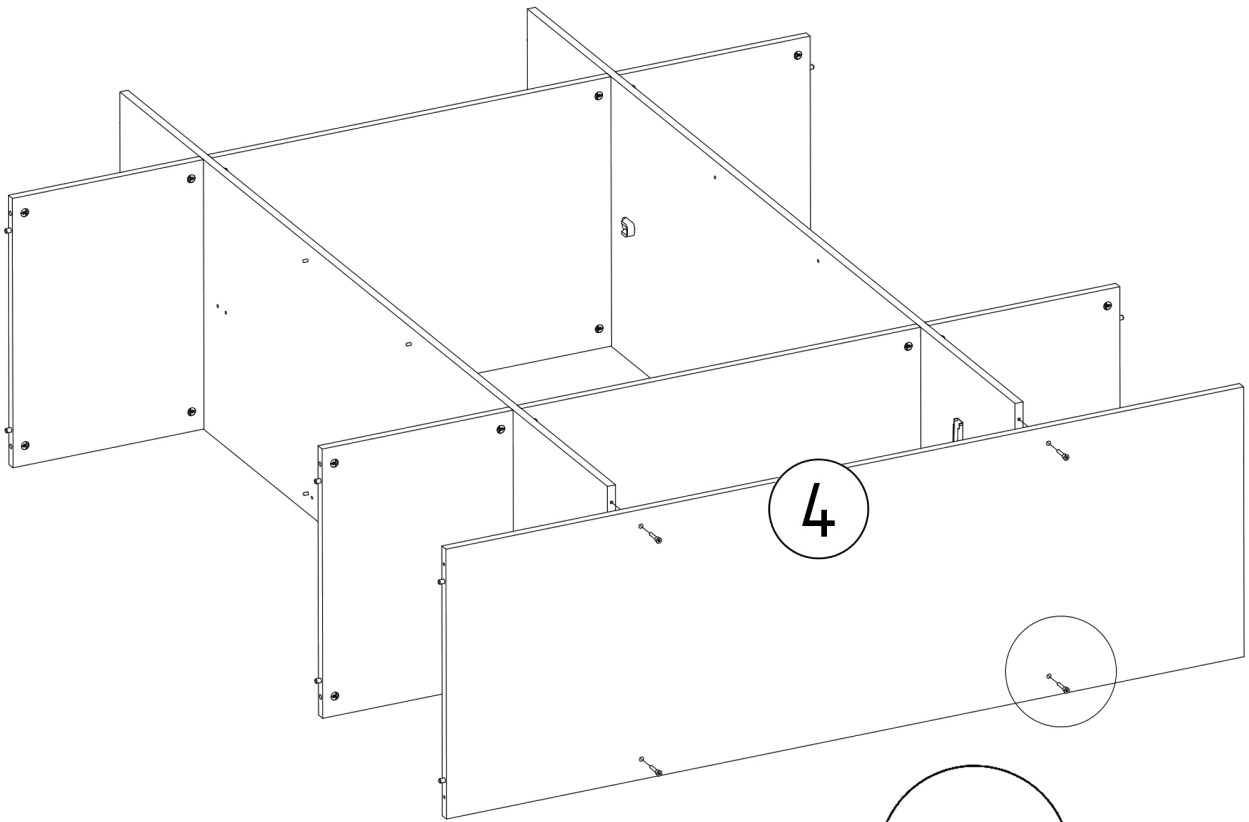

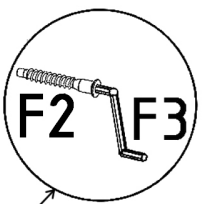

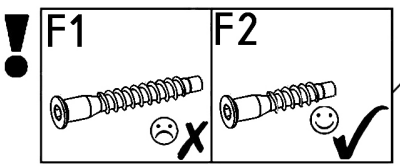

E1	V16	T1	N1
8x30mm x2	5x16mm x4	x2	L=35mm x4

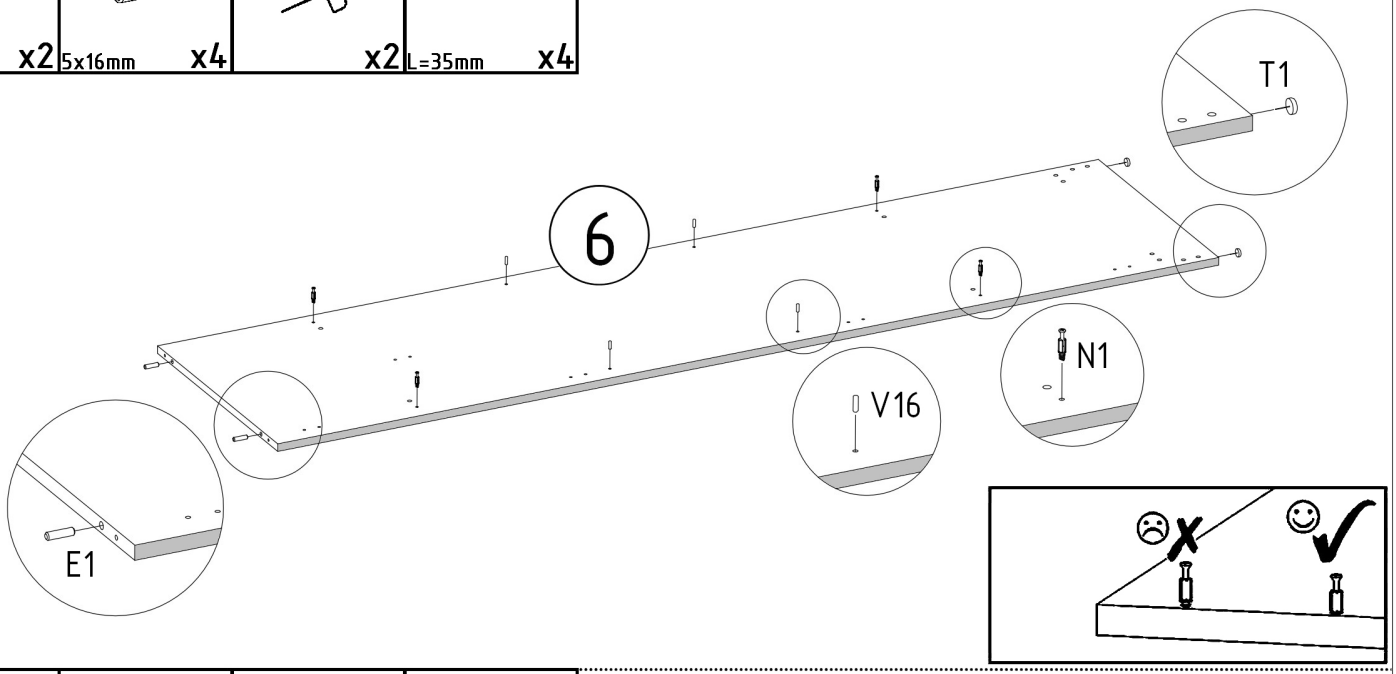

E1	V16	T1	N1
8x30mm x2	5x16mm x4	x2	L=35mm x4

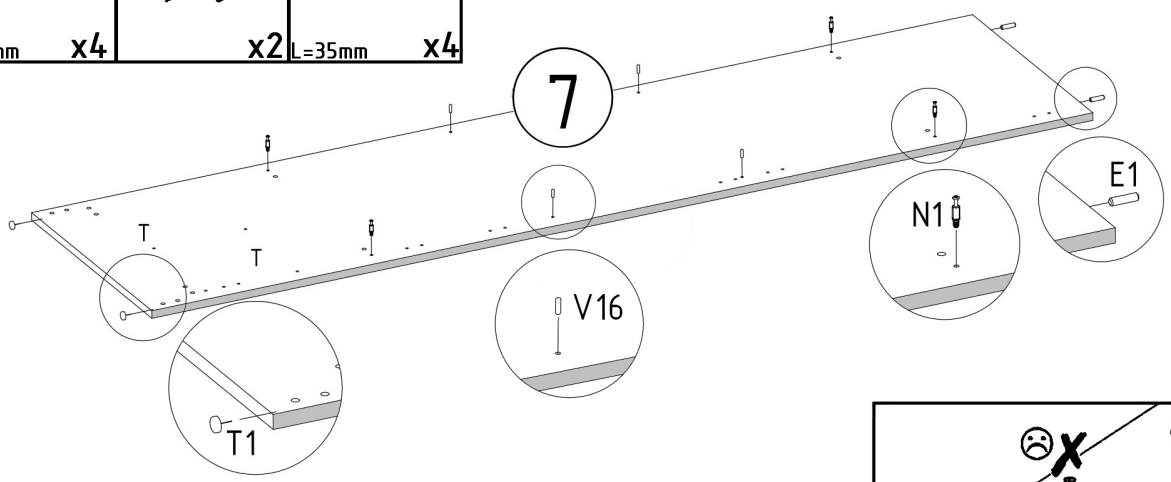

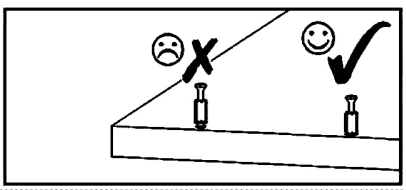

E1	T1
8x30mm x4	x4

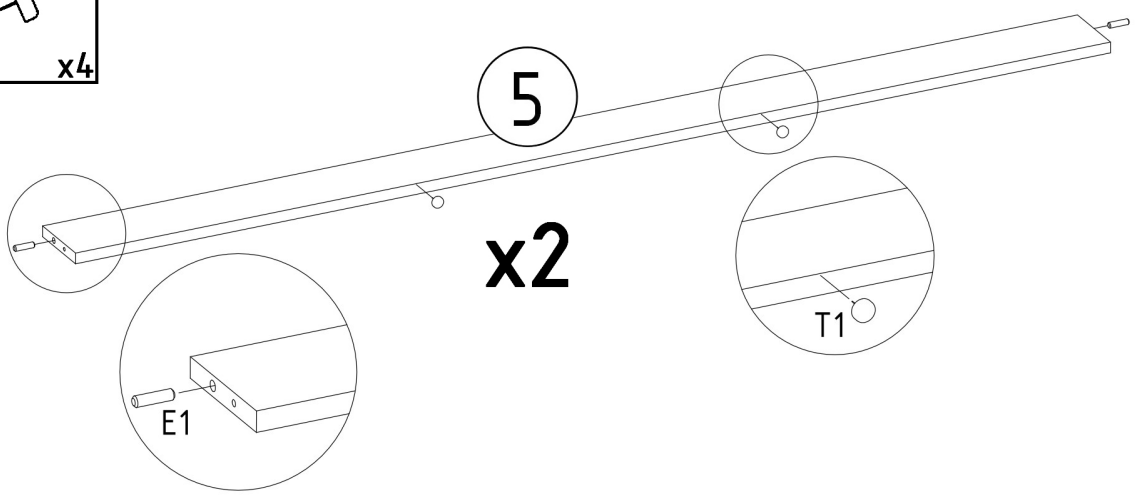

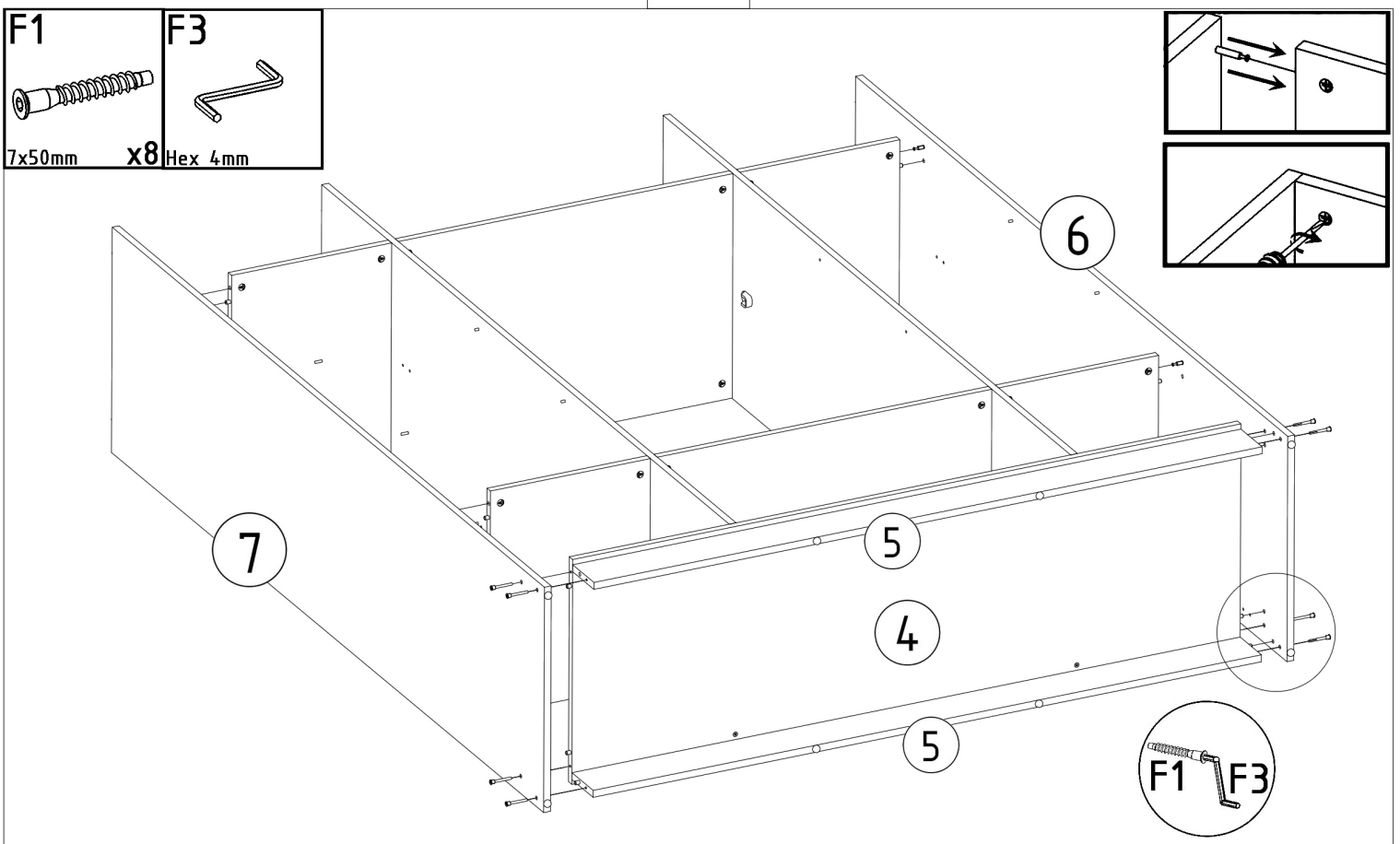
F1
7x50mm
x8
F3
Hex 4mm
6
7
5
4
5
F1
F3

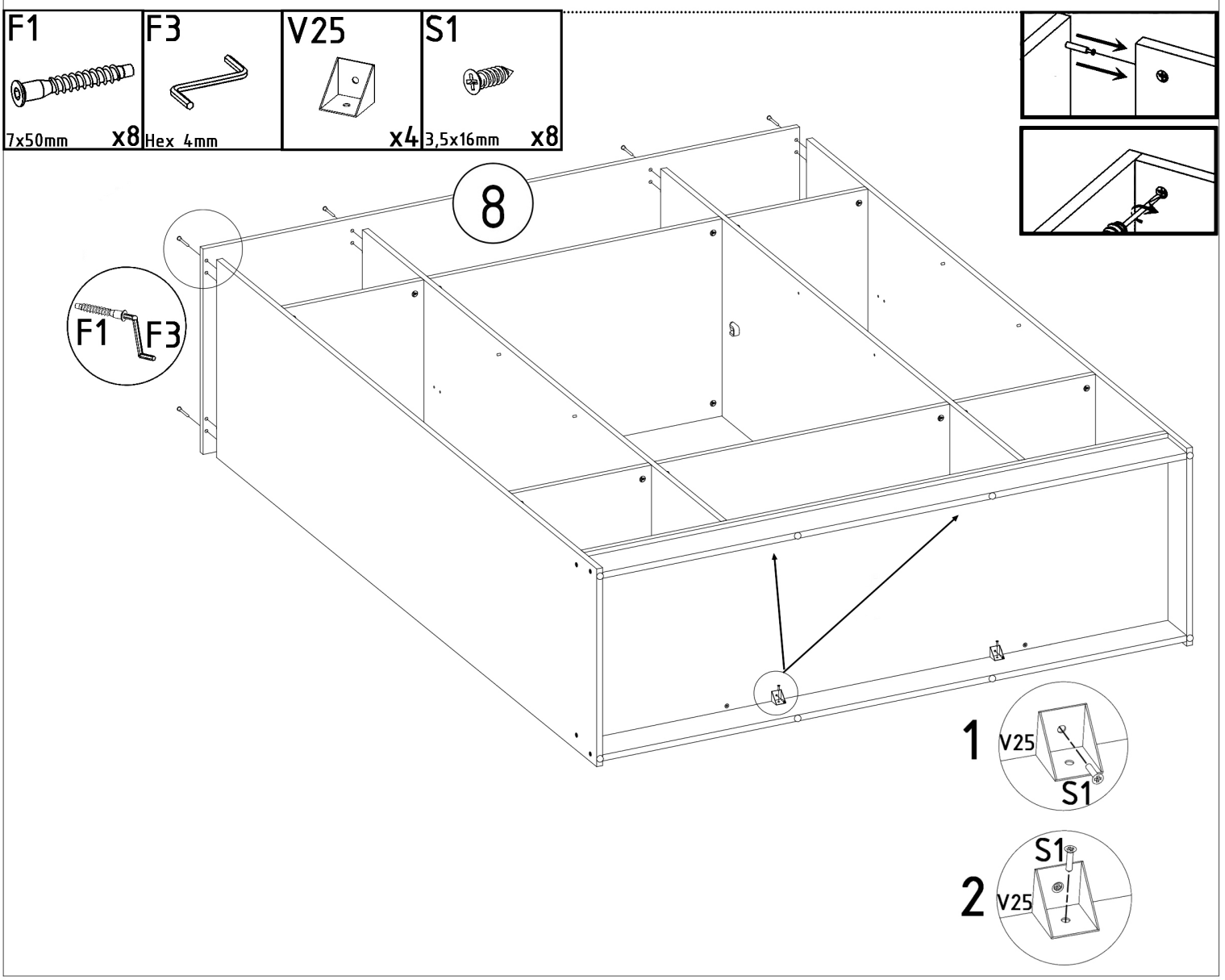
F1
7x50mm
x8
F3
Hex 4mm
V25
x4
S1
3,5x16mm
x8
8
F1
F3
1
V25
S1
2
S1
V25

Z1 x164

V15 x30

V32 L=1529mm x1

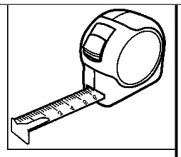

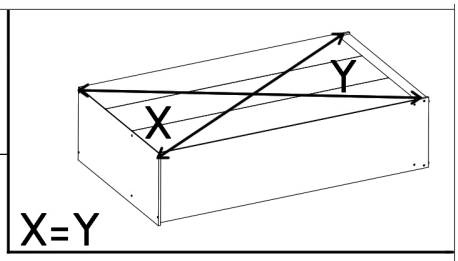

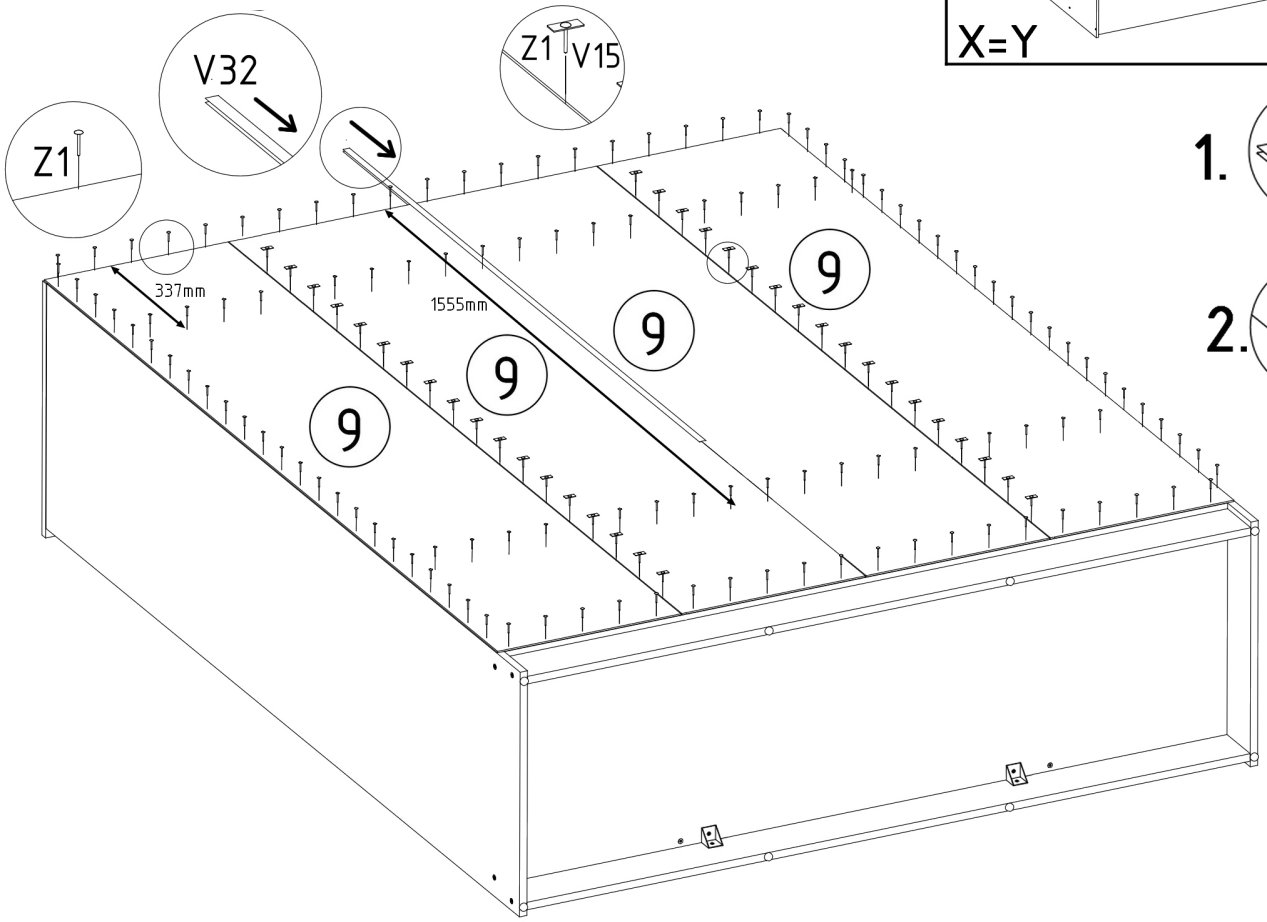

1. V32

2. Z1

N1

L=35mm x4

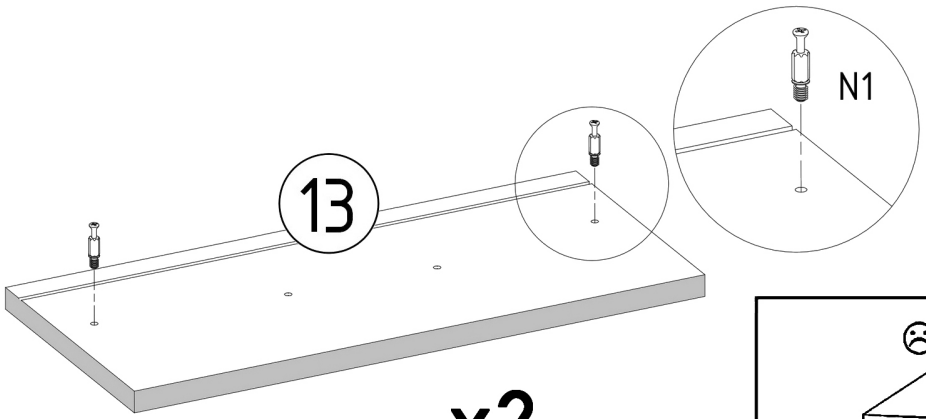

x2

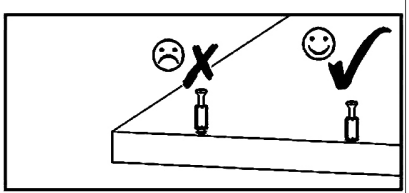

M1

12x15mm x4

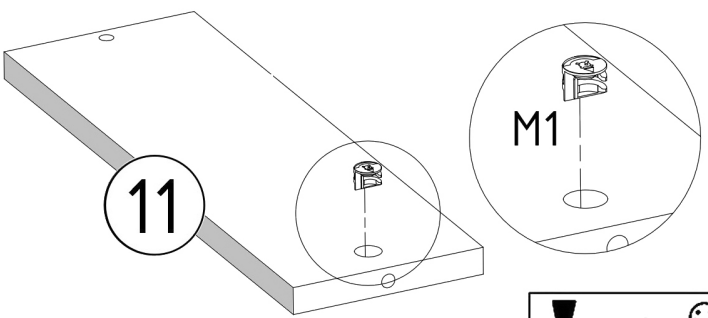

x4

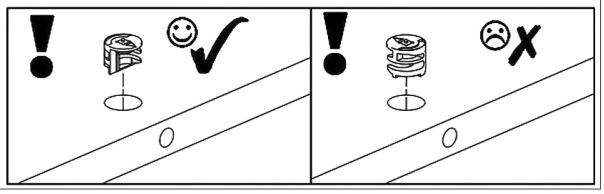

F1

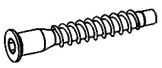

7x50mm x4

F3

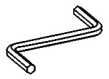

Hex 4mm

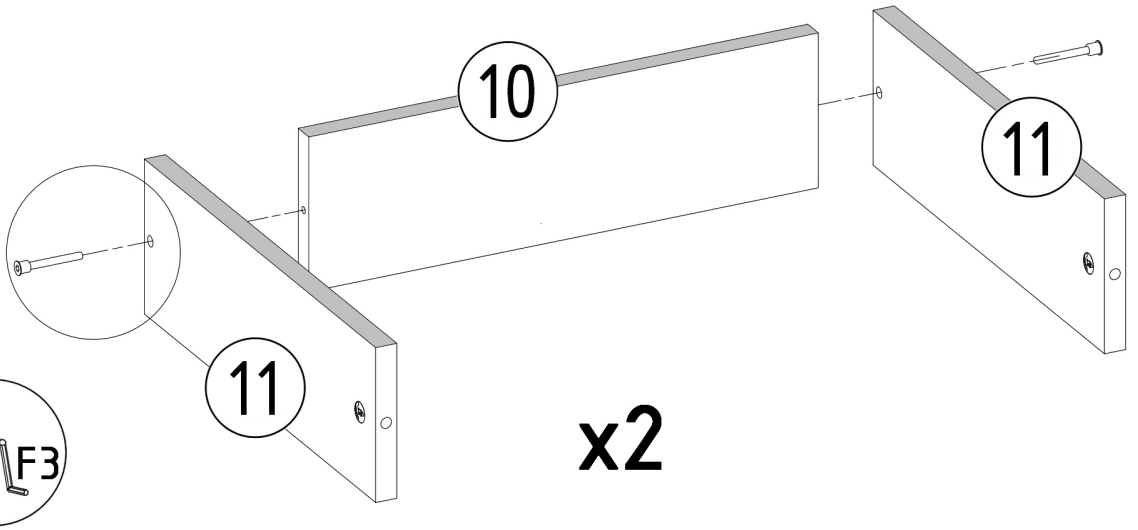

B1



ø17/4mm x4

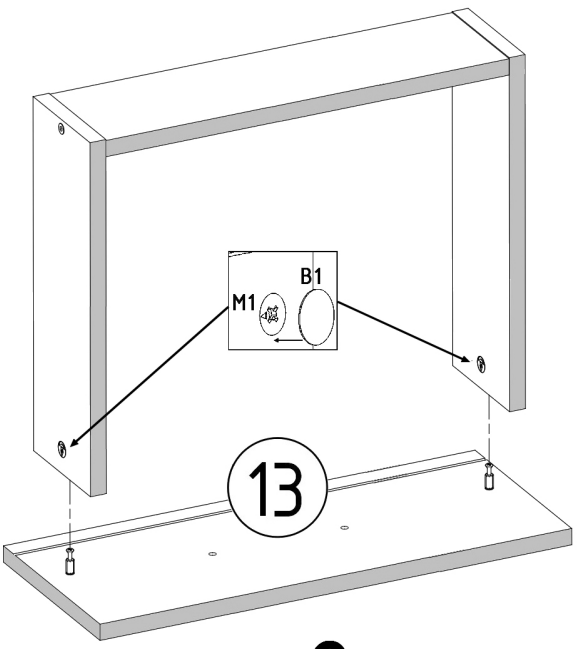

1.

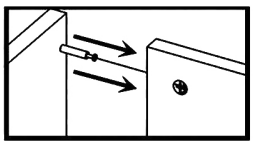

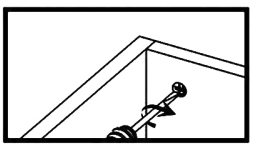

2.

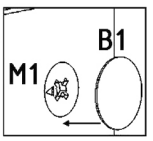

Z1



x16

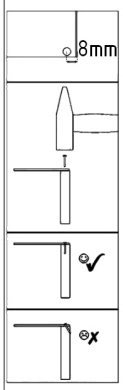

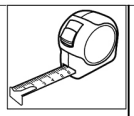

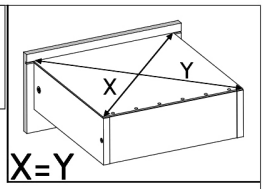

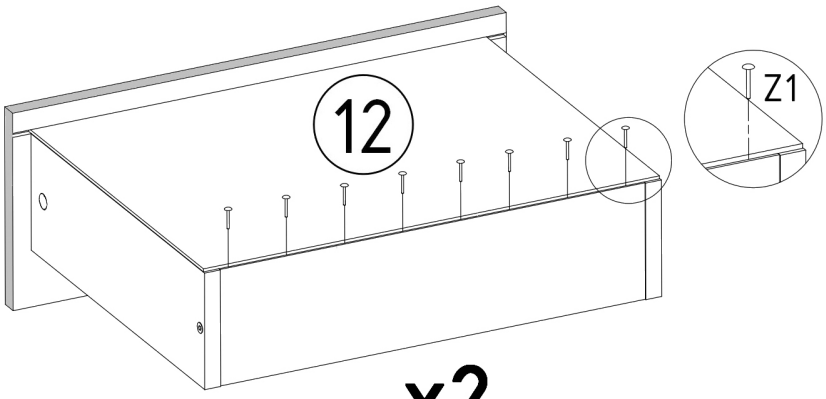

x2

S1



3,5x16mm x8

P4

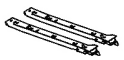

L=400mm x2

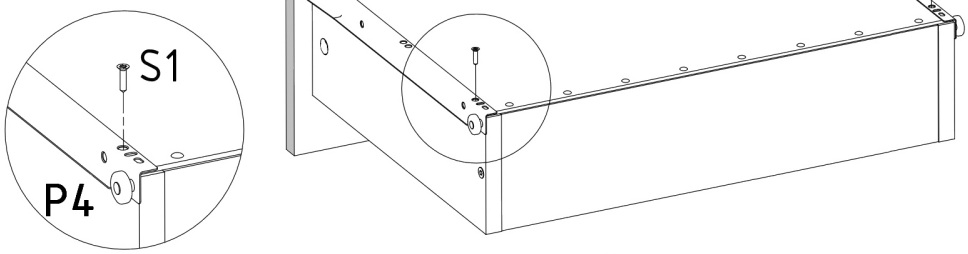

x2

A1



ZP x8

S1



3,5x16mm x16

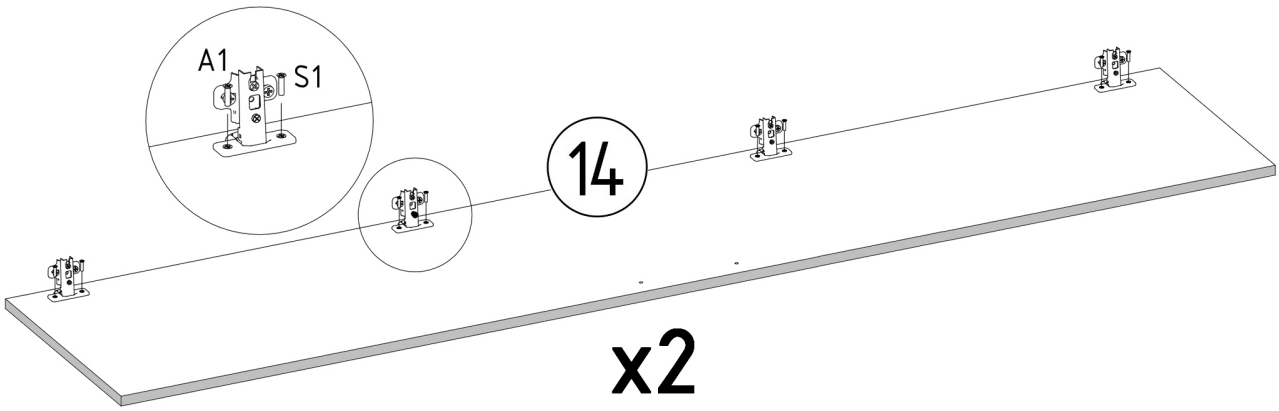

x2

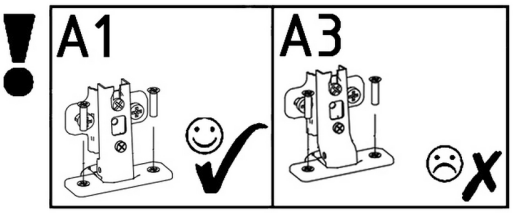

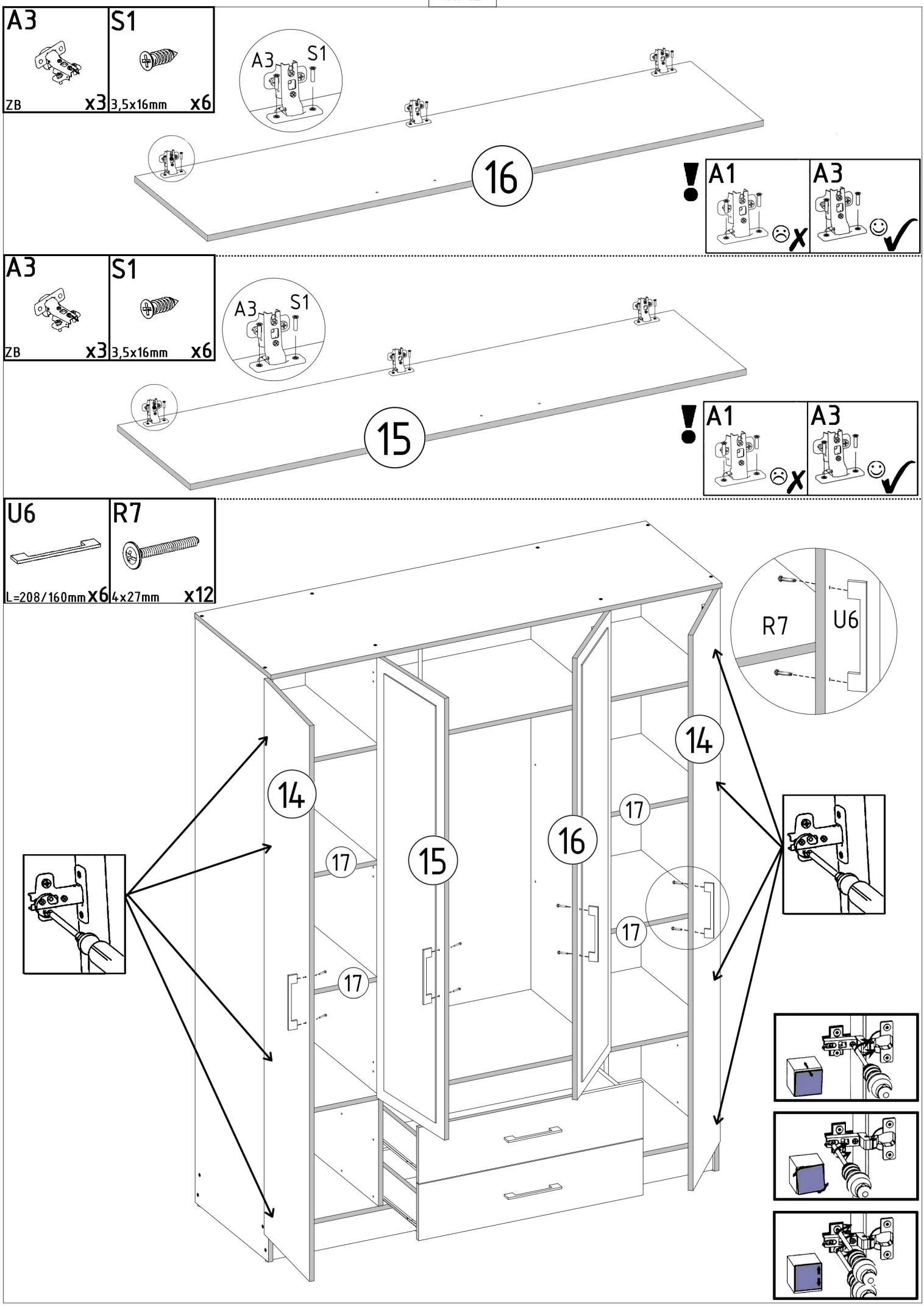
A3
ZB x3
S1
3,5x16mm x6
A3 S1
16
A1
A3
A3
ZB x3
S1
3,5x16mm x6
A3 S1
15
A1
A3
U6
L=208/160mm x6
R7
4x27mm x12
R7 U6
14
14
17
17
17
17
15
16

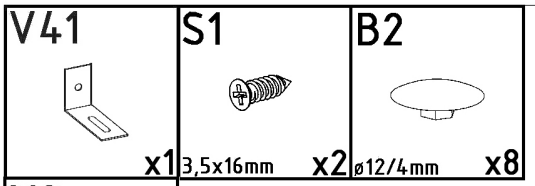
V41
x1
S1
3,5x16mm
x2
B2
ø12/4mm
x8

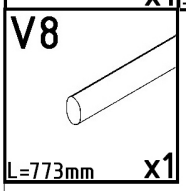
V8
L=773mm
x1

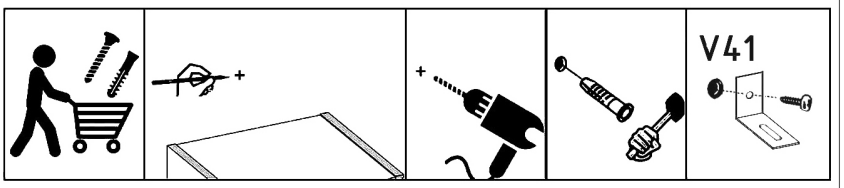
V41

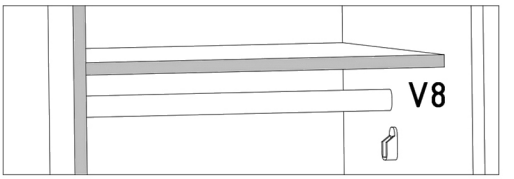
V8

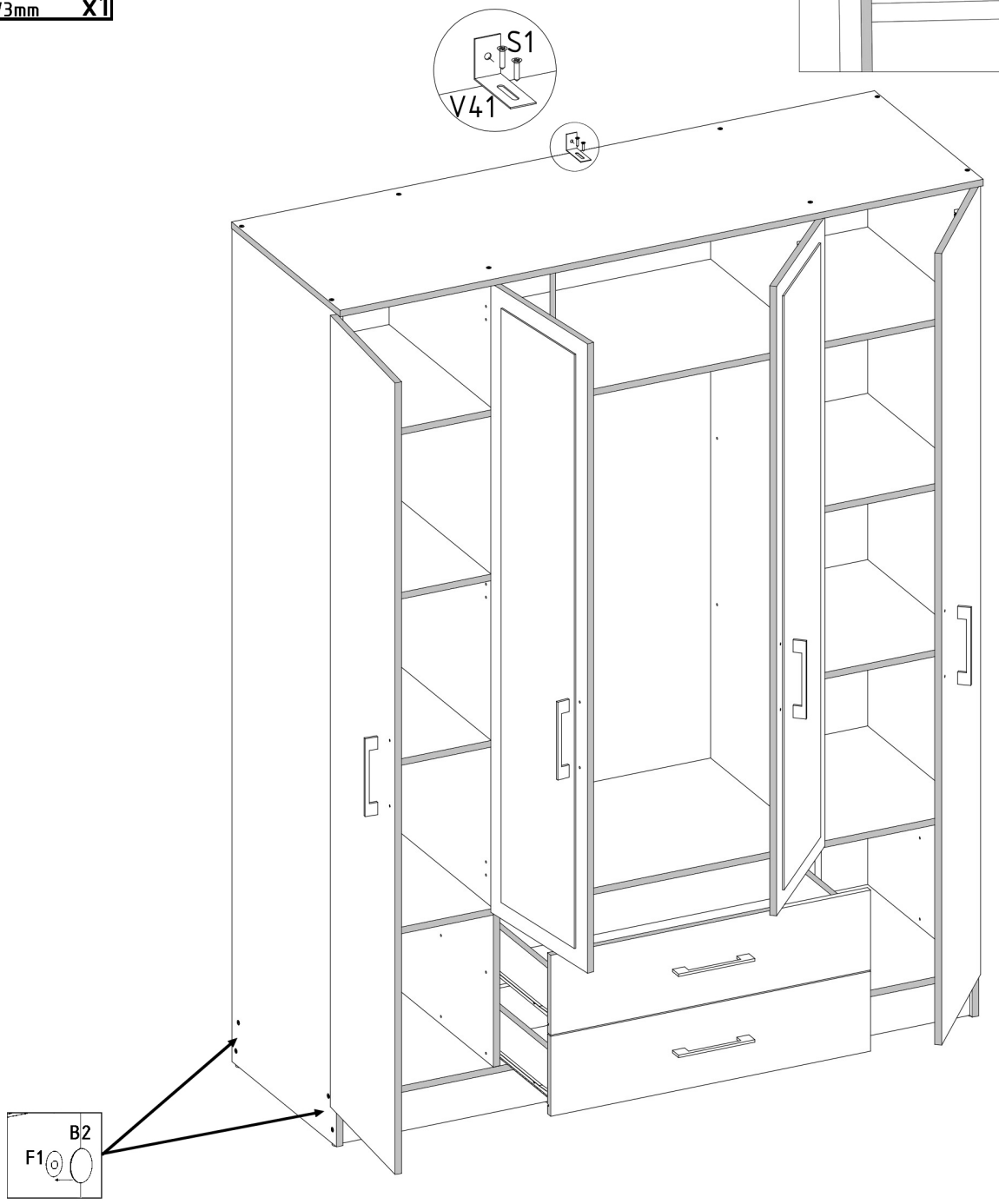
S1
V41
B2
F1