Wysoki słupek 50 cm

Kaszmir

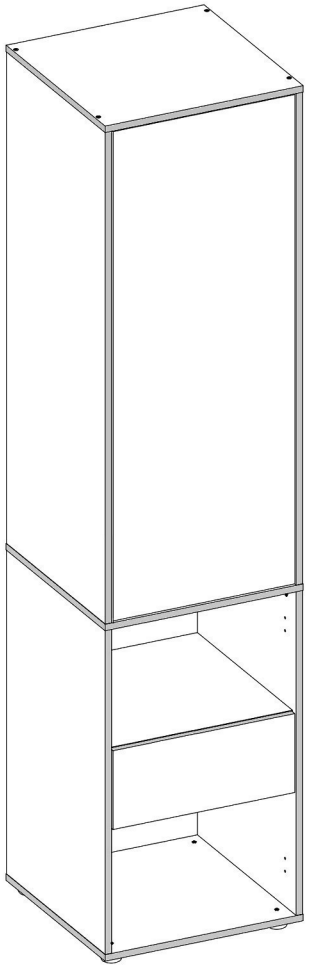

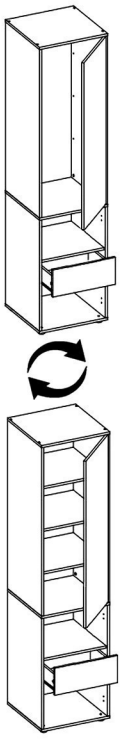

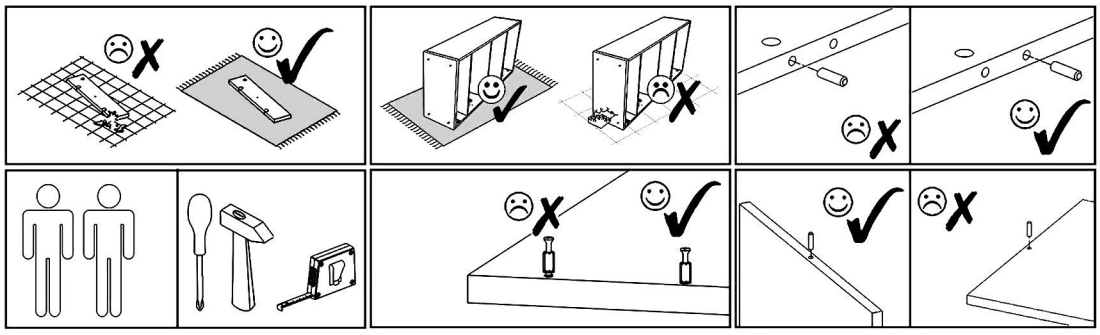

S5 4x30mm x6	V8 L=455mm x1	V35 x1	V41 x1	V19 x2	V23 5,5x10,5mm x2	B1 ø17/4-5mm x6	B3 ø7-8/5mm x8
R1 6x8mm x4	M1 12x15mm x14	S1 3,5x16mm x12	E1 8x30mm x12	E3 8x50mm x4	F1 7x50mm x10	F3 x1	V53 D=20mm x4
N1 L=35mm x6	Z1 x110	A2 ZW x2	V16 L=16mm x12	T11 x4	P3 L=350mm x1	N4 L=62mm x4	V15 x10

Wysoki słupek 50 cm

Kaszmir

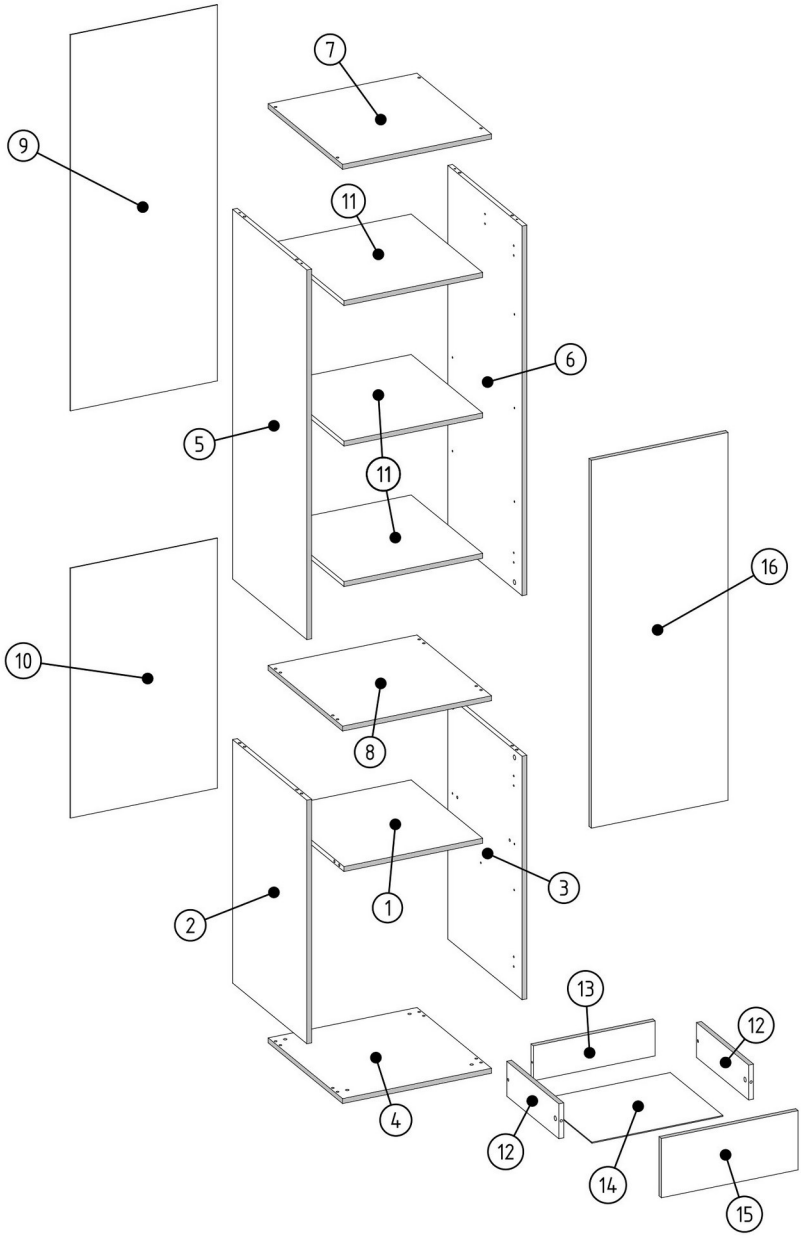

16	1
15	1
14	1
13	1
12	2
11	3
10	1
9	1
8	1
7	1
6	1
5	1
4	1
3	1
2	1
1	1
NUMBER	QUANTITY

M1	E1
12x15mm x4	8x30mm x4

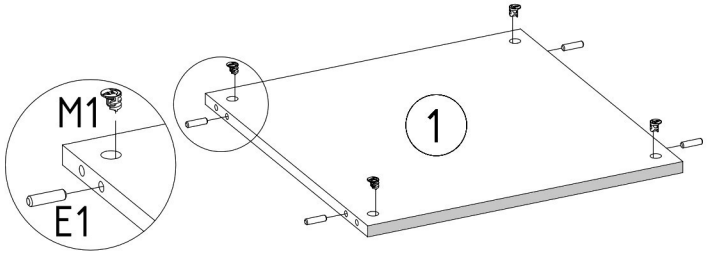

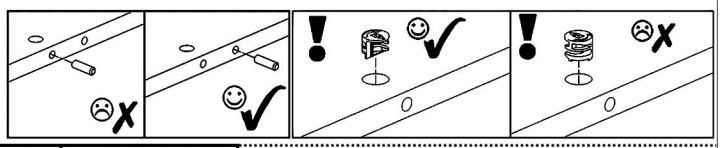

M1	E1	E3	N1	R1	P3
12x15mm x2	8x30mm x2	8x50mm x2	L=35mm x2	6x8mm x2	L=350mm x1

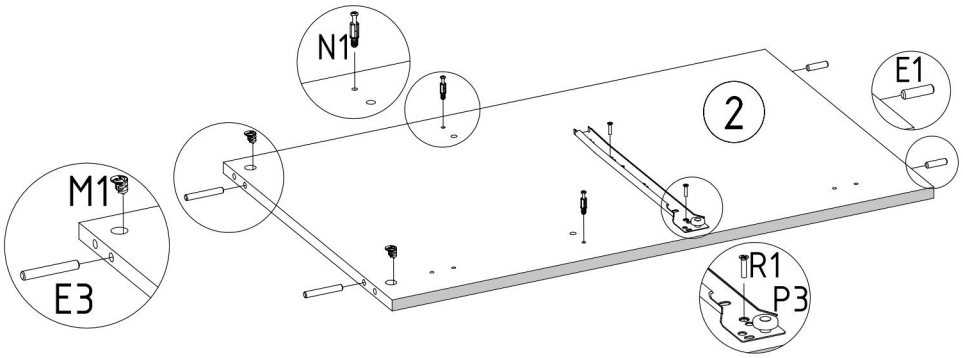

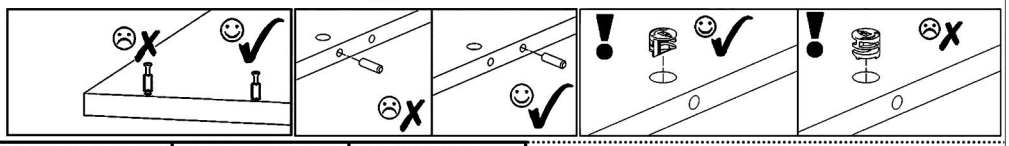

M1	E1	E3	N1	R1	P3
12x15mm x2	8x30mm x2	8x50mm x2	L=35mm x2	6x8mm x2	L=350mm x1

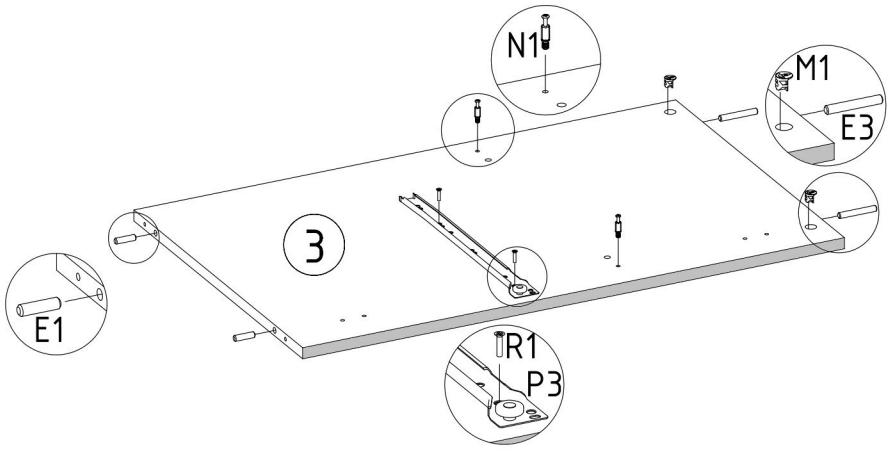

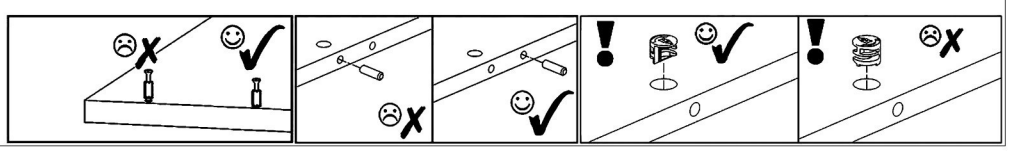

T11



x4

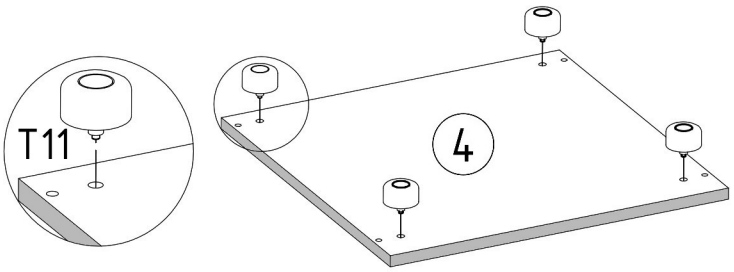

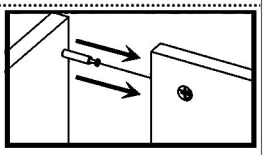

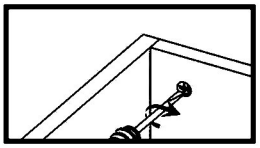

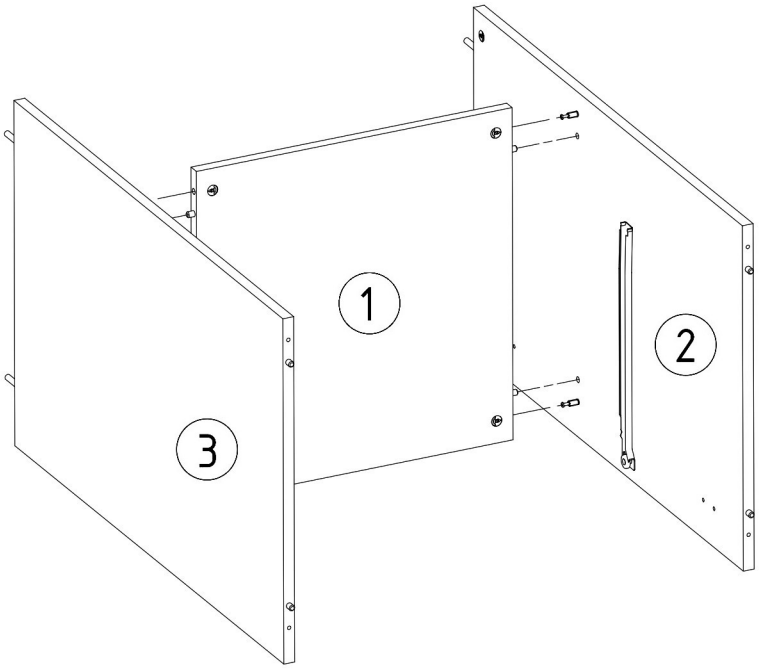

F1

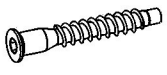

7x50mm x4

F3

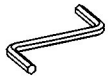

Hex 4mm

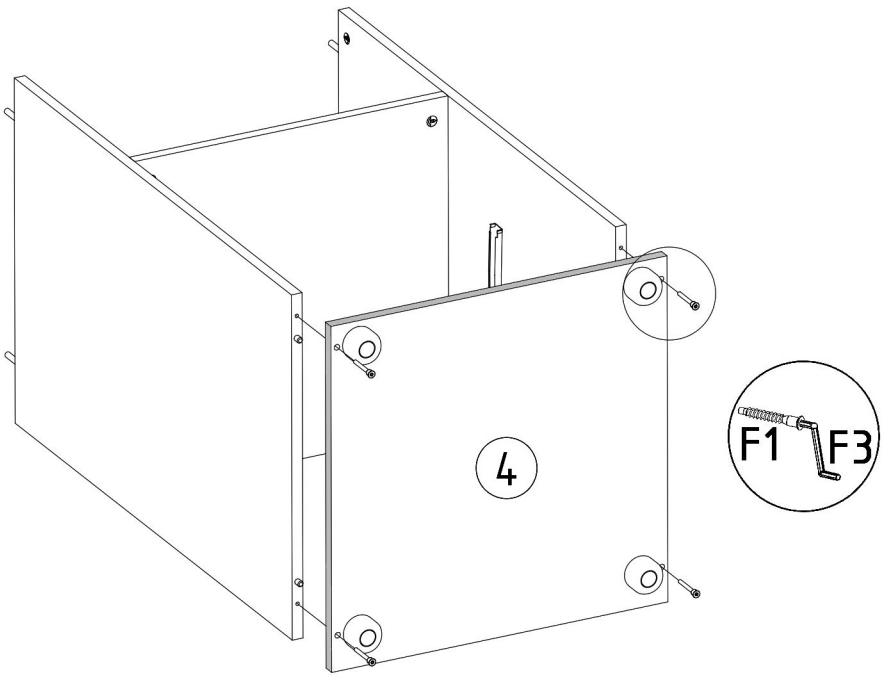

M1	E1	V19
12x15mm x4	8x30mm x4	x2

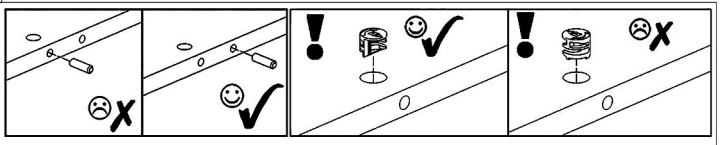

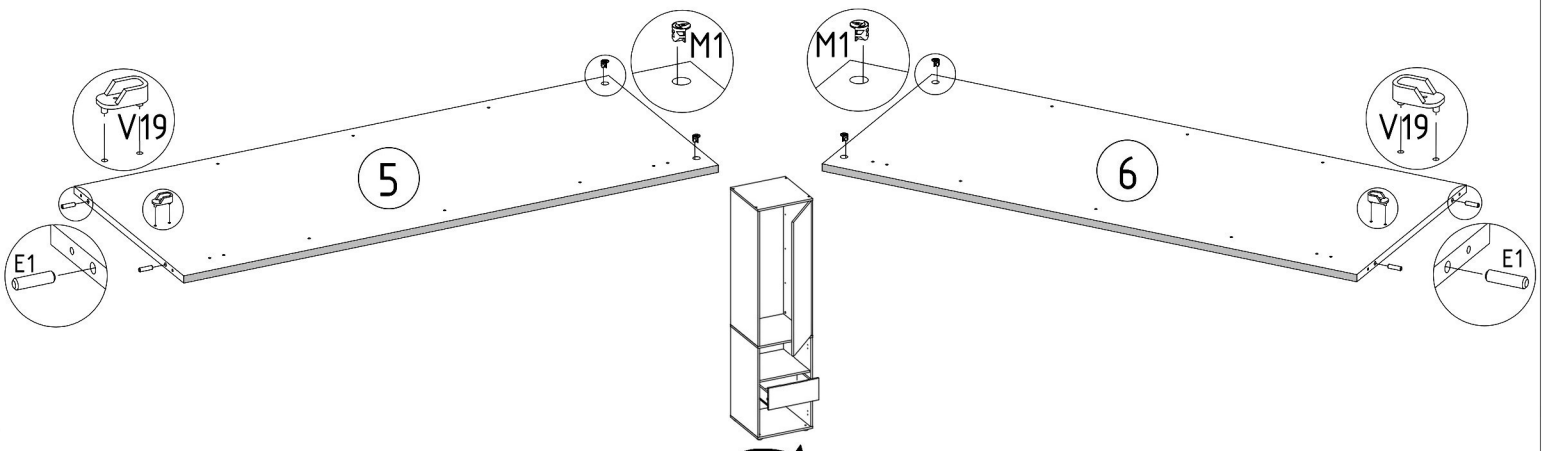

M1	E1	V16
12x15mm x4	8x30mm x4	5x16mm x12

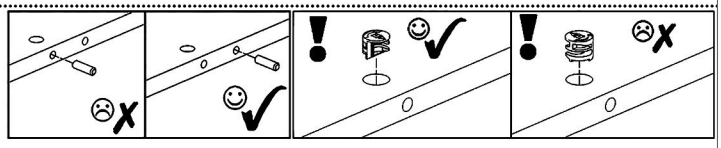

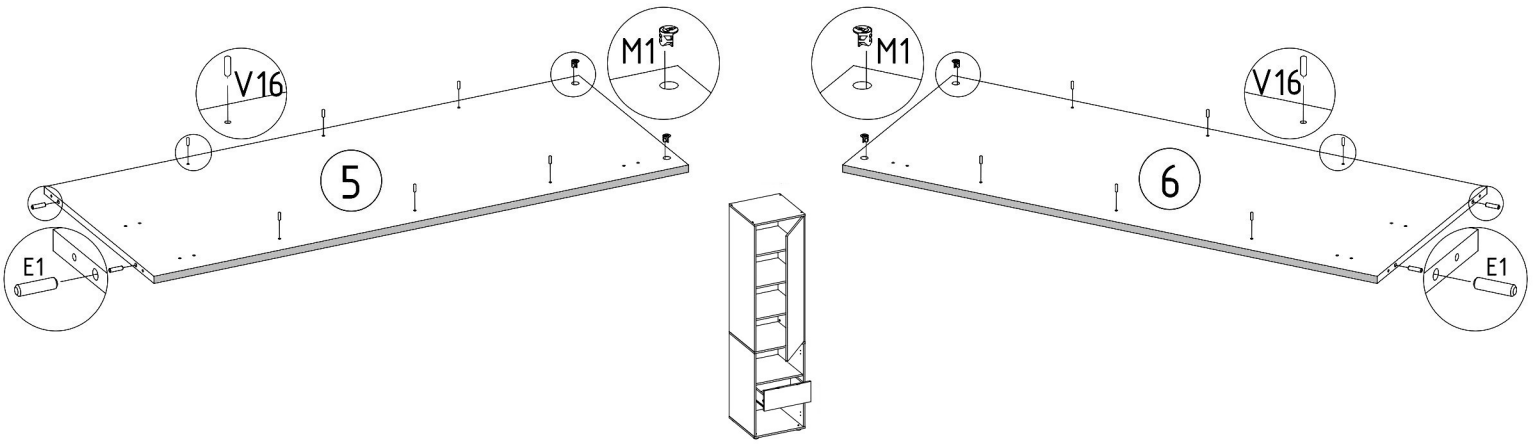

F1	F3
7x50mm x4	Hex 4mm

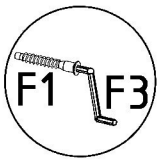

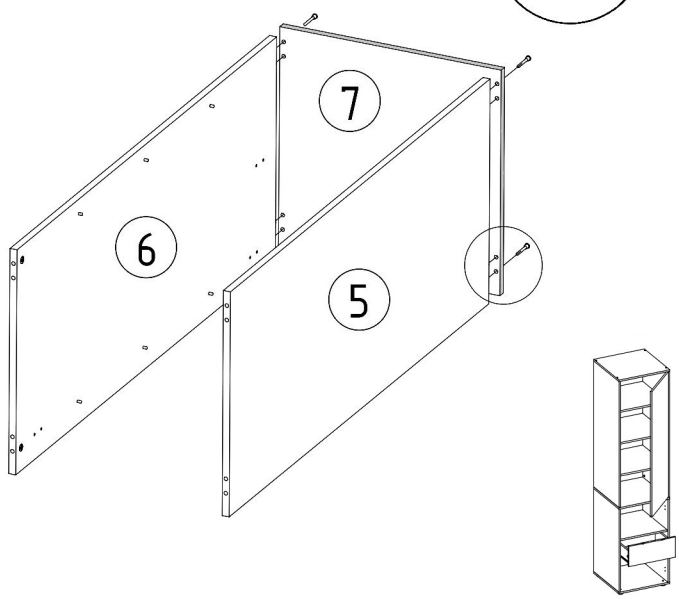

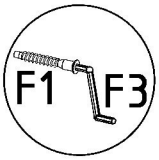

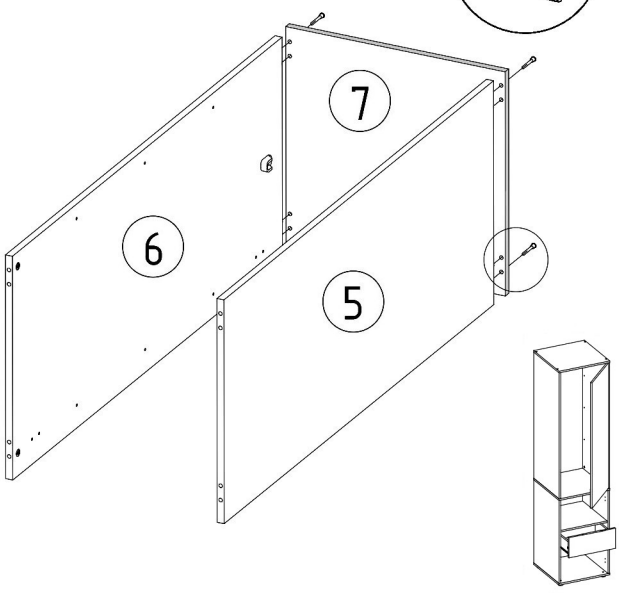

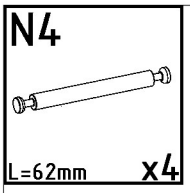
N4
L=62mm
x4

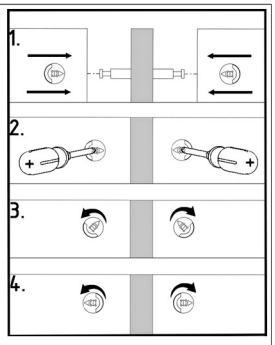
1.
2.
3.
4.

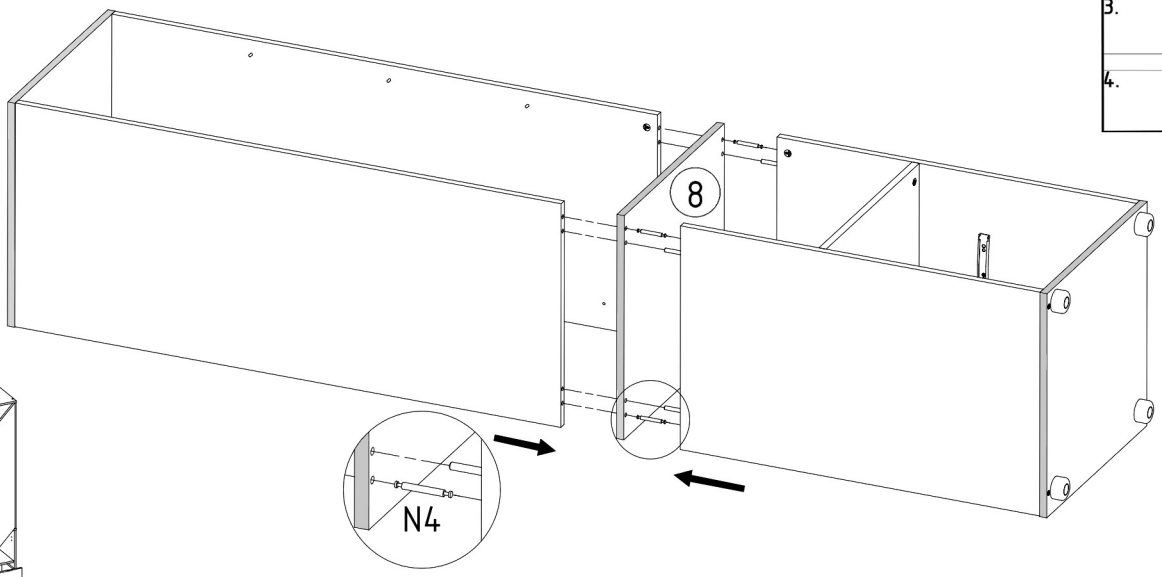
8
N4

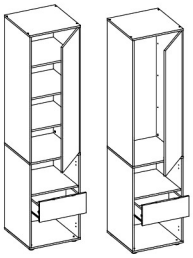

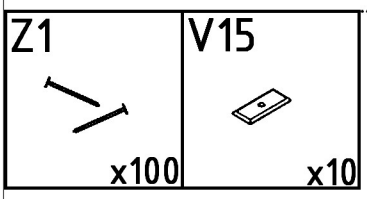
Z1
x100
V15
x10

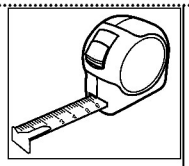

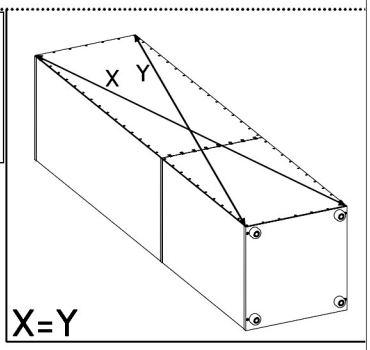
X Y
X=Y

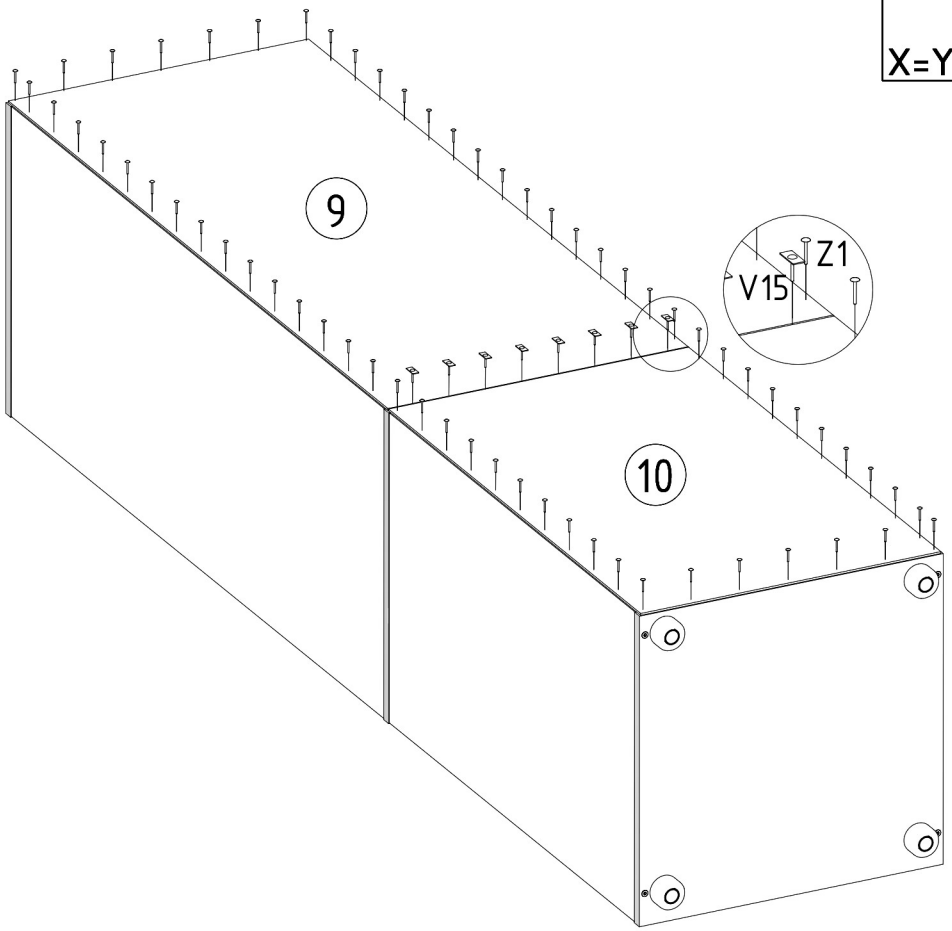
9
10
Z1
V15

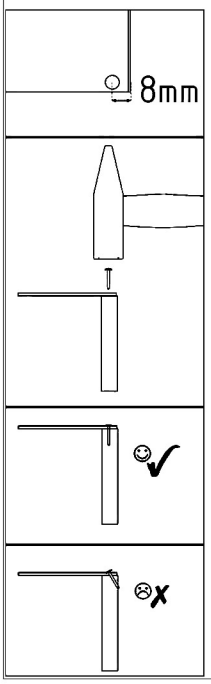
8mm

N1



L=35mm x2

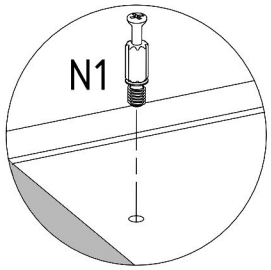

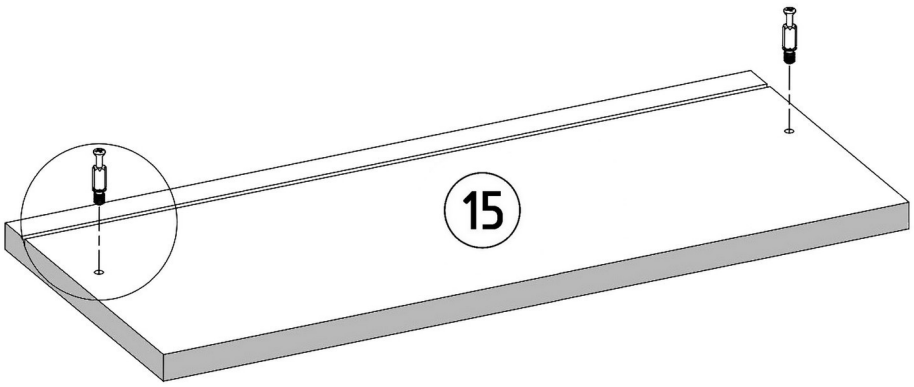

M1



12x15mm x2

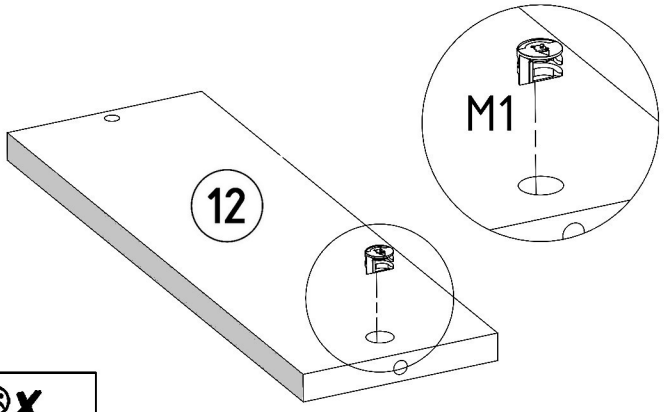

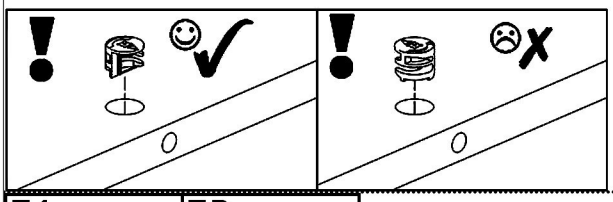

x2

F1

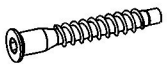

7x50mm x2

F3

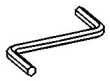

Hex 4mm

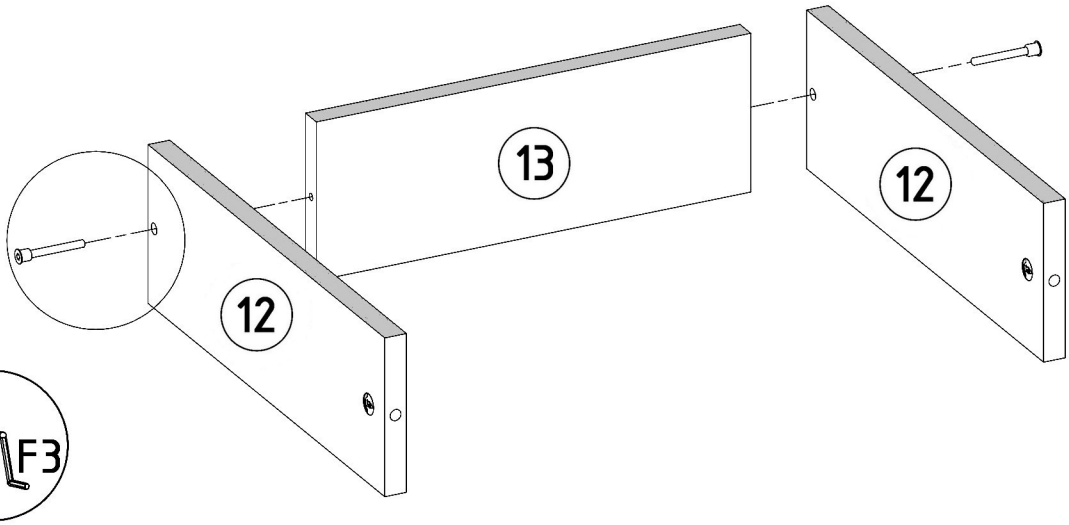



B1



ø17/4mm x2

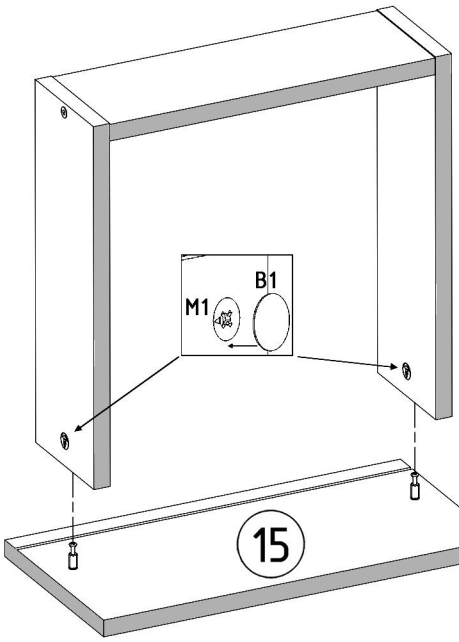

1.

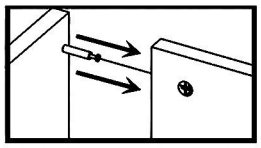

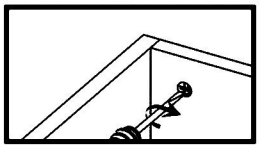

2.

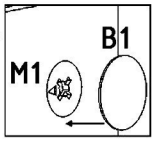

Z1



x10

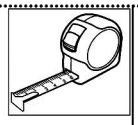

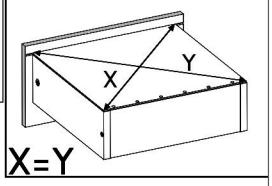

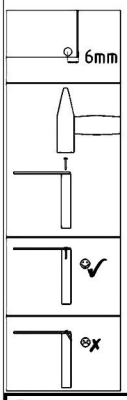

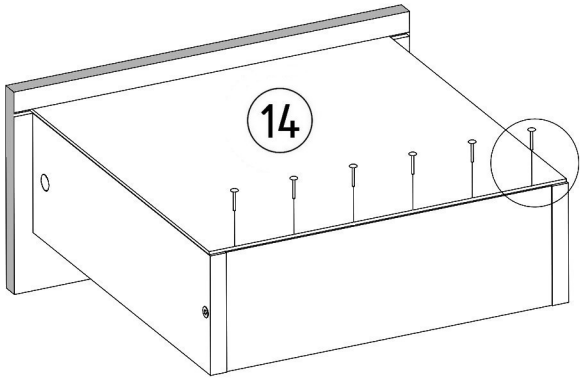

S1



3,5x16mm x4

P3

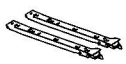

L=350mm x1

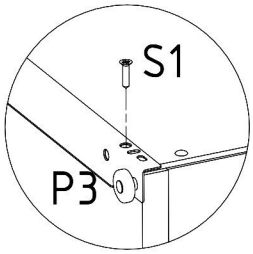

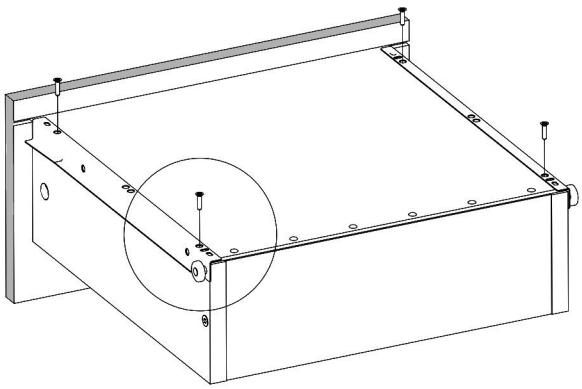

A2	S1
ZW x2	3,5x16mm x4

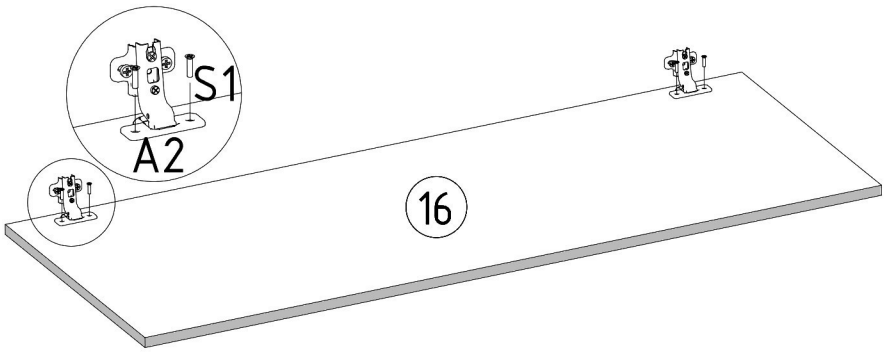

V8	V35	B1	F3	V41	S1
L=455mm x1	x1	ø17/4mm x4	Hex 4mm	x1	3,5x16mm x4

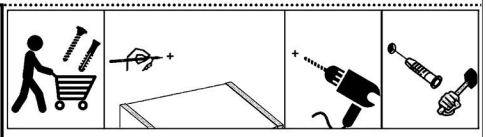

B3
ø 7-8/5mm x8

V23
5,5x10,5mm x2

V53
D=20mm x4

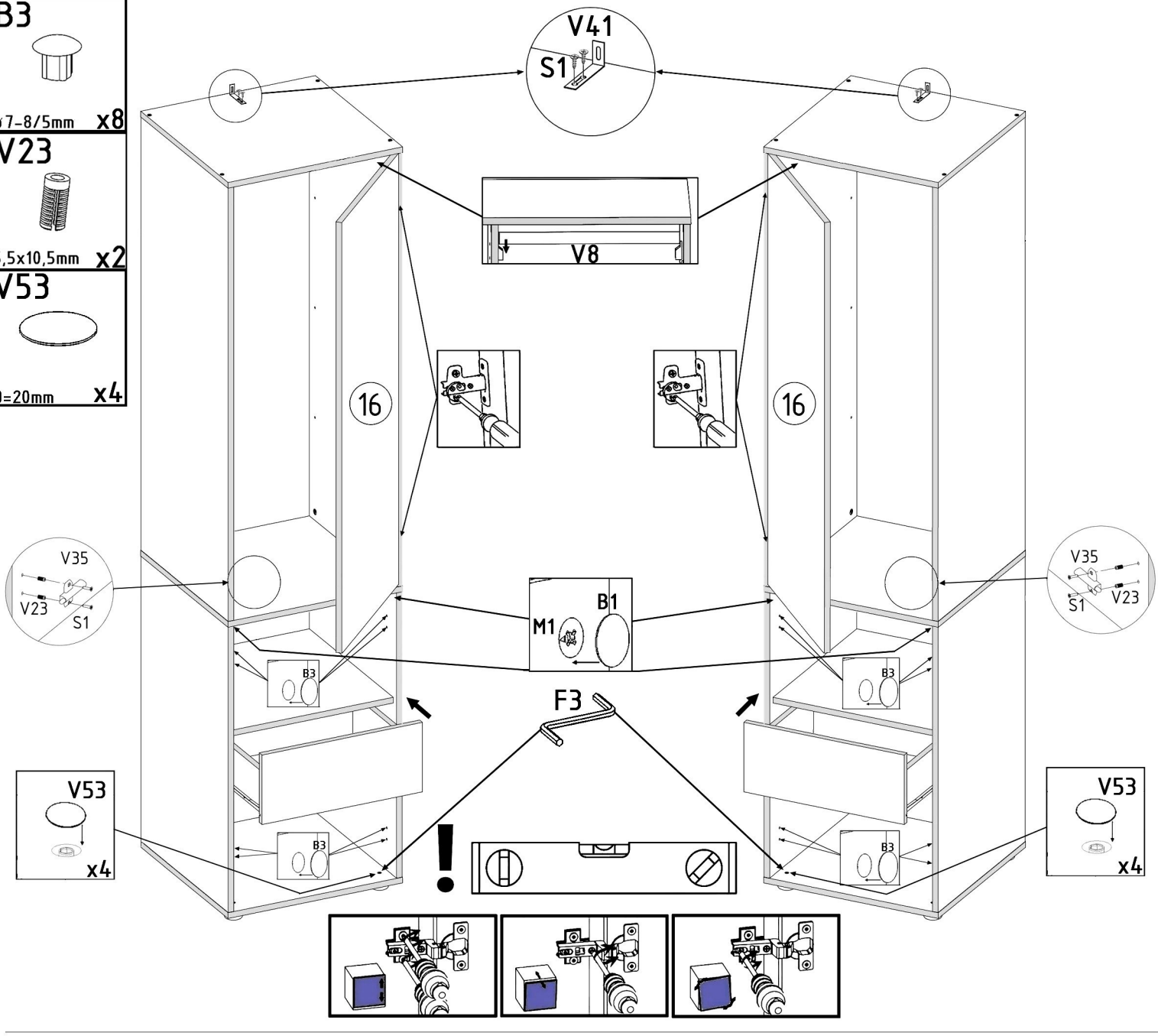

B3	B1	F3	V41	S1	V35
ø7-8/5mm x8	ø17/4mm x4	Hex 4mm	x1	3,5x16mm x4	x1

V23	V53
5,5x10,5mm x2	D=20mm x4

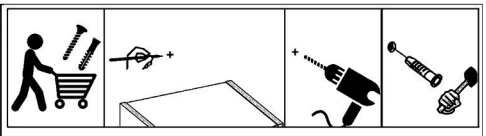

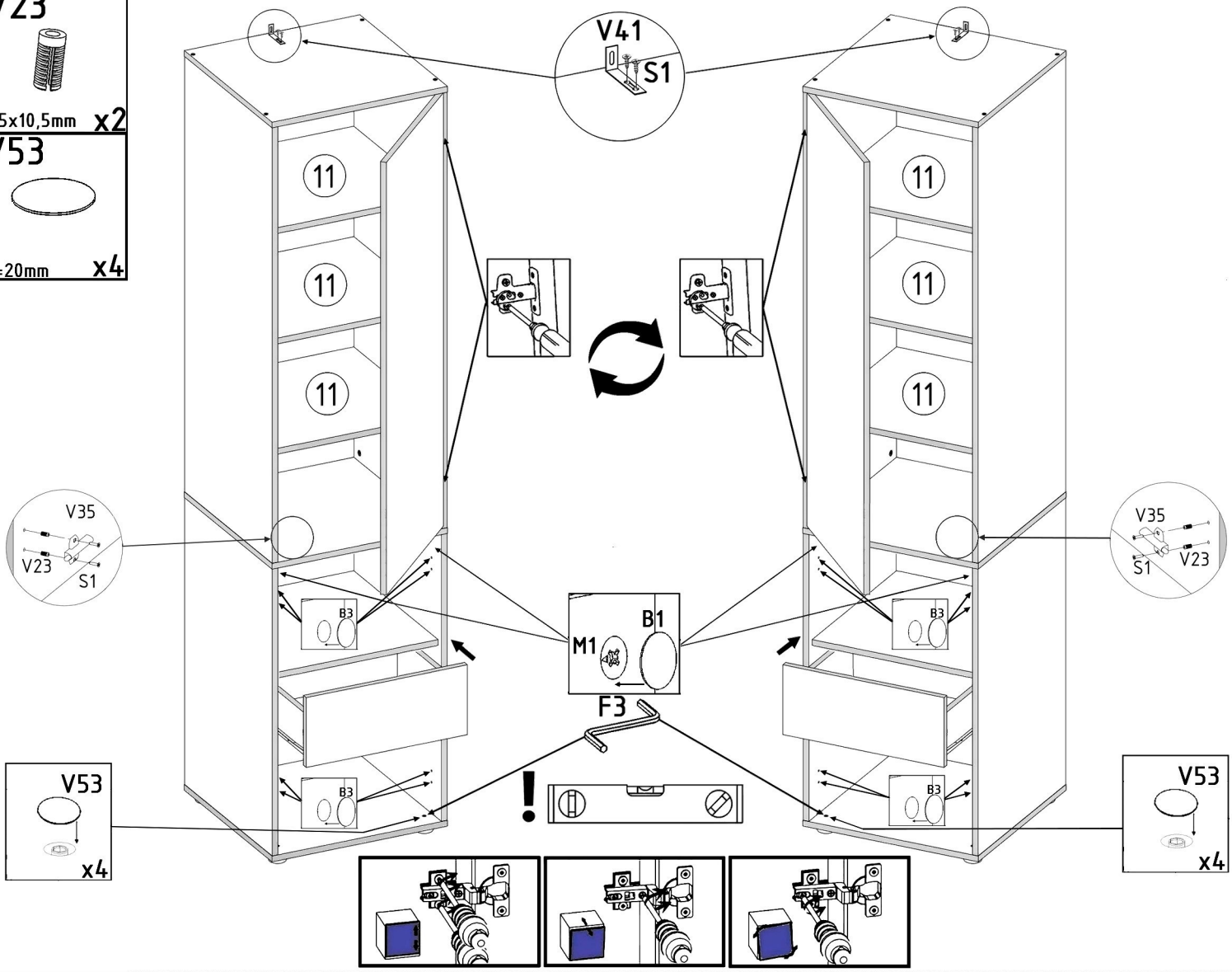

S5
4x30mm x6

