INSTRUKCJA MONTAŻU

Szafka RTV 109 cm z szafką, 2 szufladami i półką

Kolor: Antracyt / Dąb Artisan

Kod produktu: OR10478

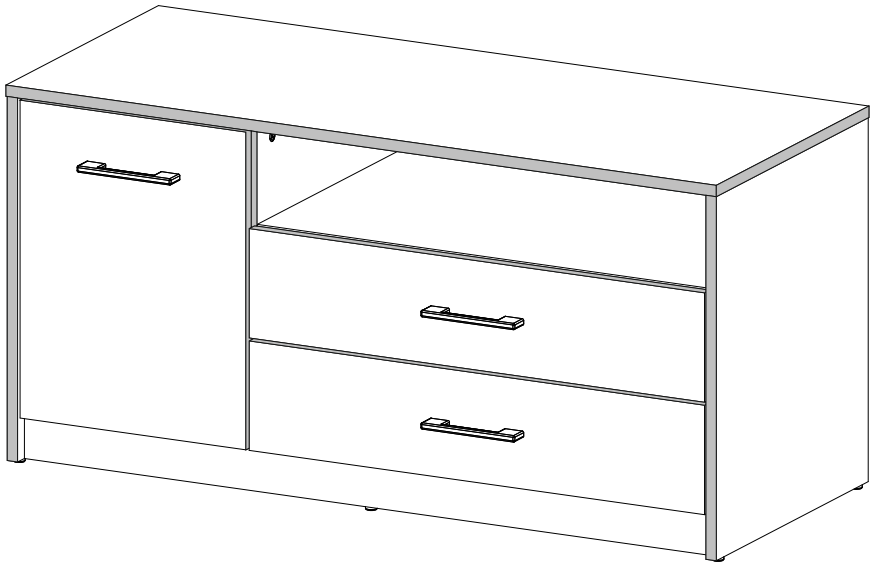

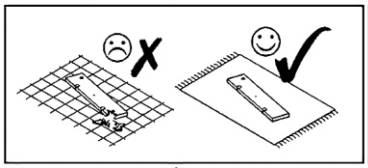

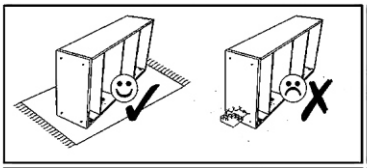

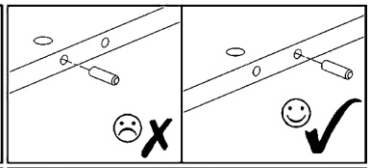

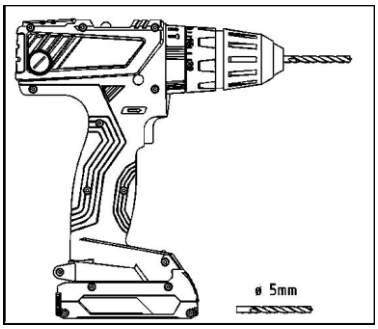

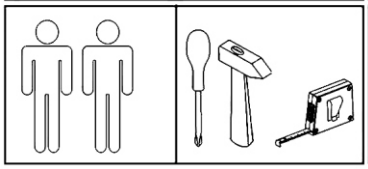

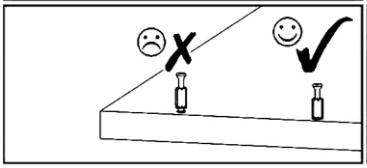

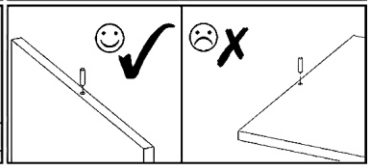

E1 8x30mm x12	F1 7x50mm x6	F3 Hex 4mm x1	V16 5x16mm x8	N1 L=35mm x16	M1 12x15mm x16	T1 x5	U5 L=137/96mm x3	
R7 4x27mm x6	V25 x1	Z1 x70	R1 6x8mm x8	S1 3,5x16mm x14	V13 x1	A2 ZW x2	P3 L=350mm x2	
B1 B ø17/4mm x8	B1 Ant ø17/4mm x4	B1 S/Art ø17/4mm x4						

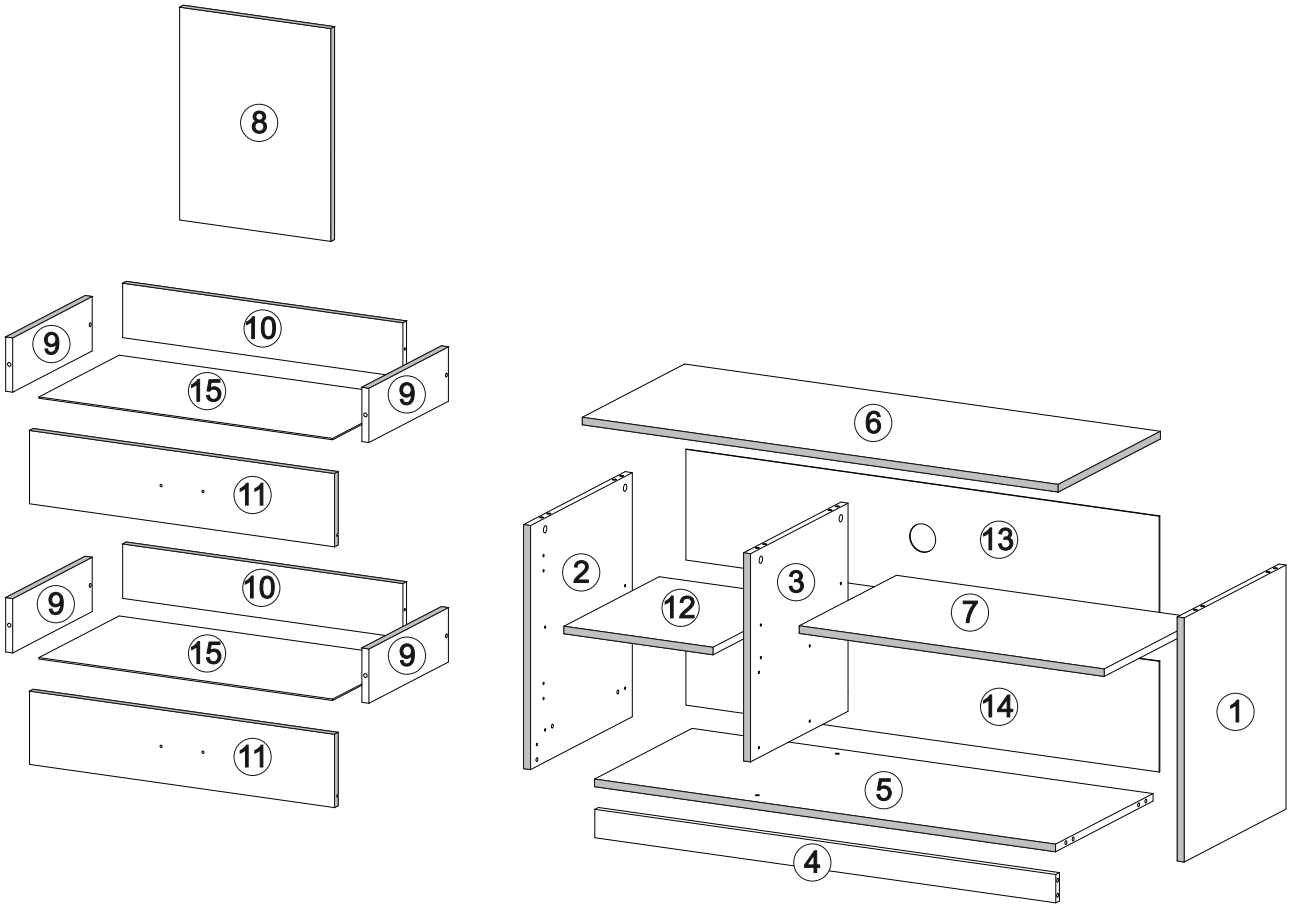

001882	1	1
001881	2	1
001888	3	1
001883	4	1
001889	5	1
001890	6	1
001891	7	1
001884	8	1
000053	9	4
ID	NUMBER	QUANTITY

001892	10	2
001885	11	2
001887	12	1
001886	13	1
001972	14	1
001893	15	2

E1	N1	T1	M1	P3	R1	V16
8x30mm x4	L=35mm x6	x4	12x15mm x4	L=350mm x2	6x8mm x4	5x16mm x4

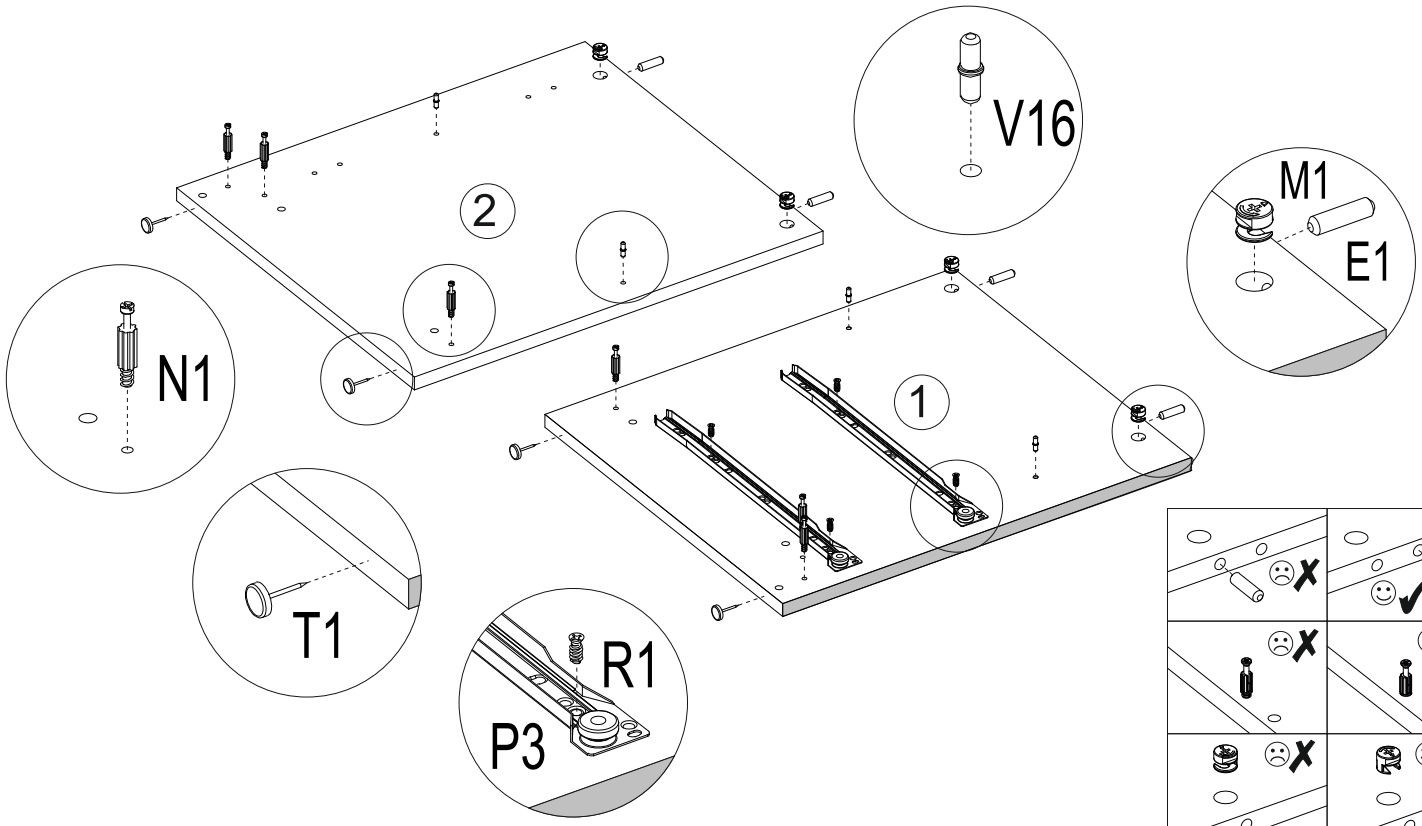

E1	V16	M1	P3	R1
8x30mm x2	5x16mm x4	12x15mm x2	L=350mm x2	6x8mm x4

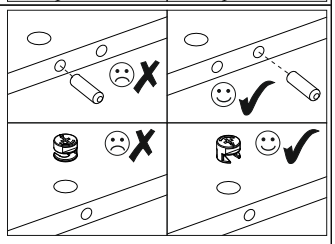

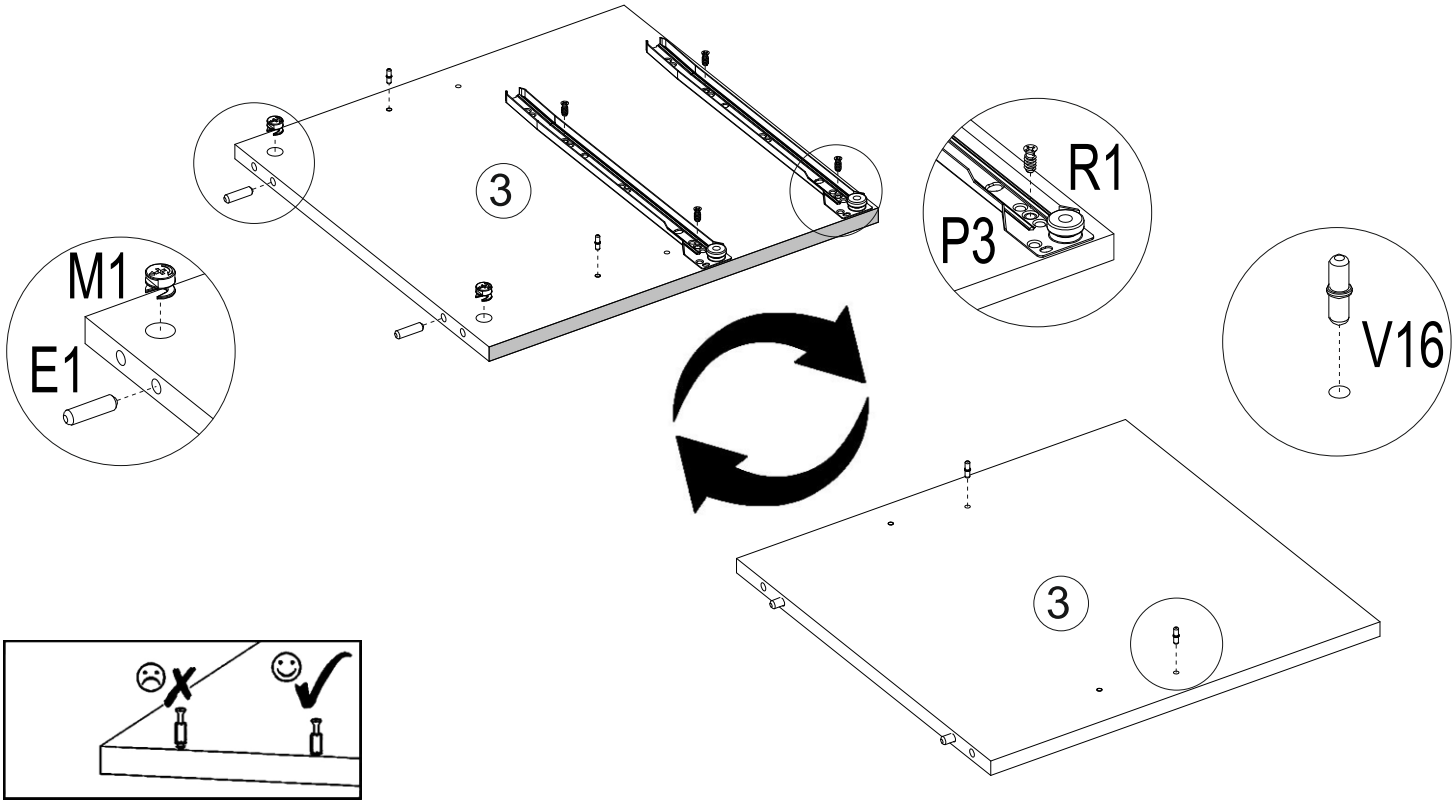

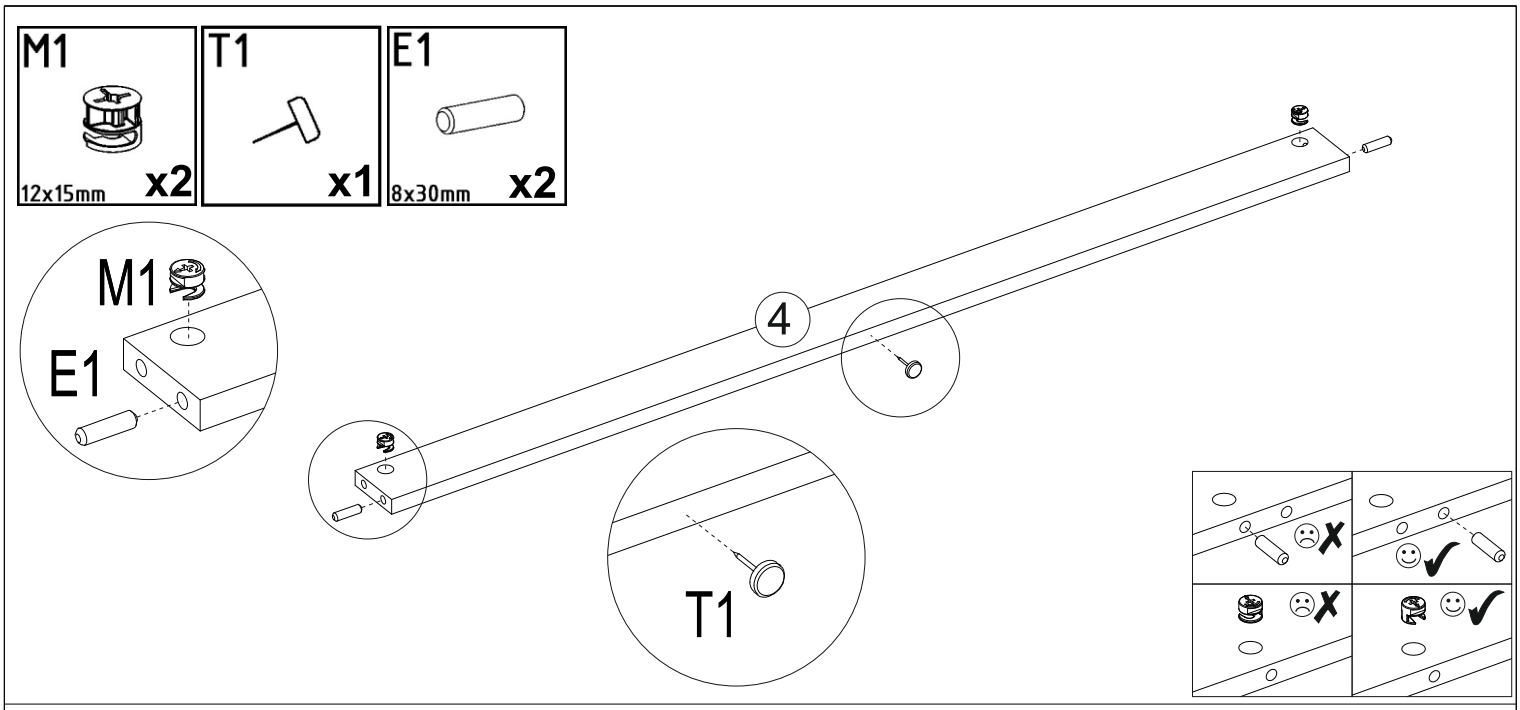
M1
12x15mm
x2
T1
x1
E1
8x30mm
x2
M1
E1
4
T1

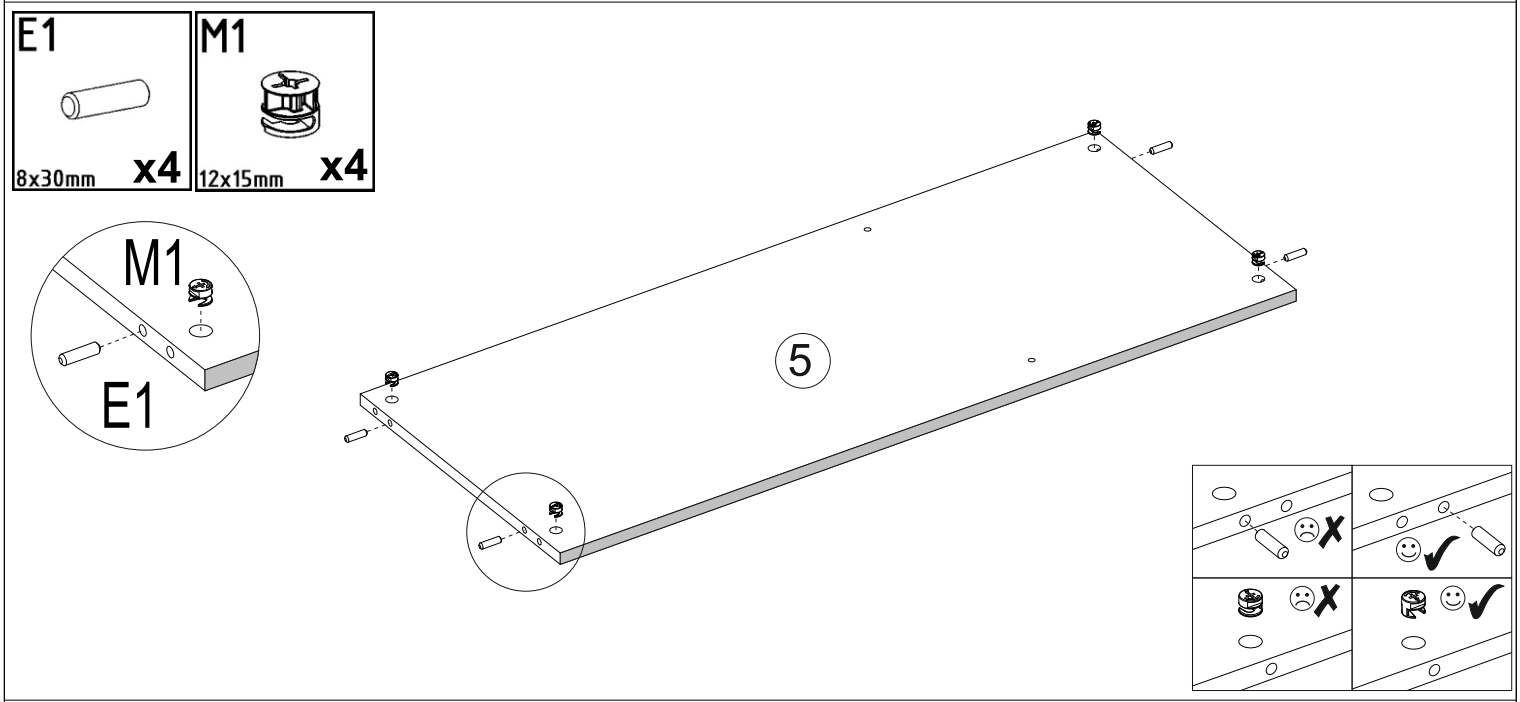
E1
8x30mm
x4
M1
12x15mm
x4
M1
E1
5

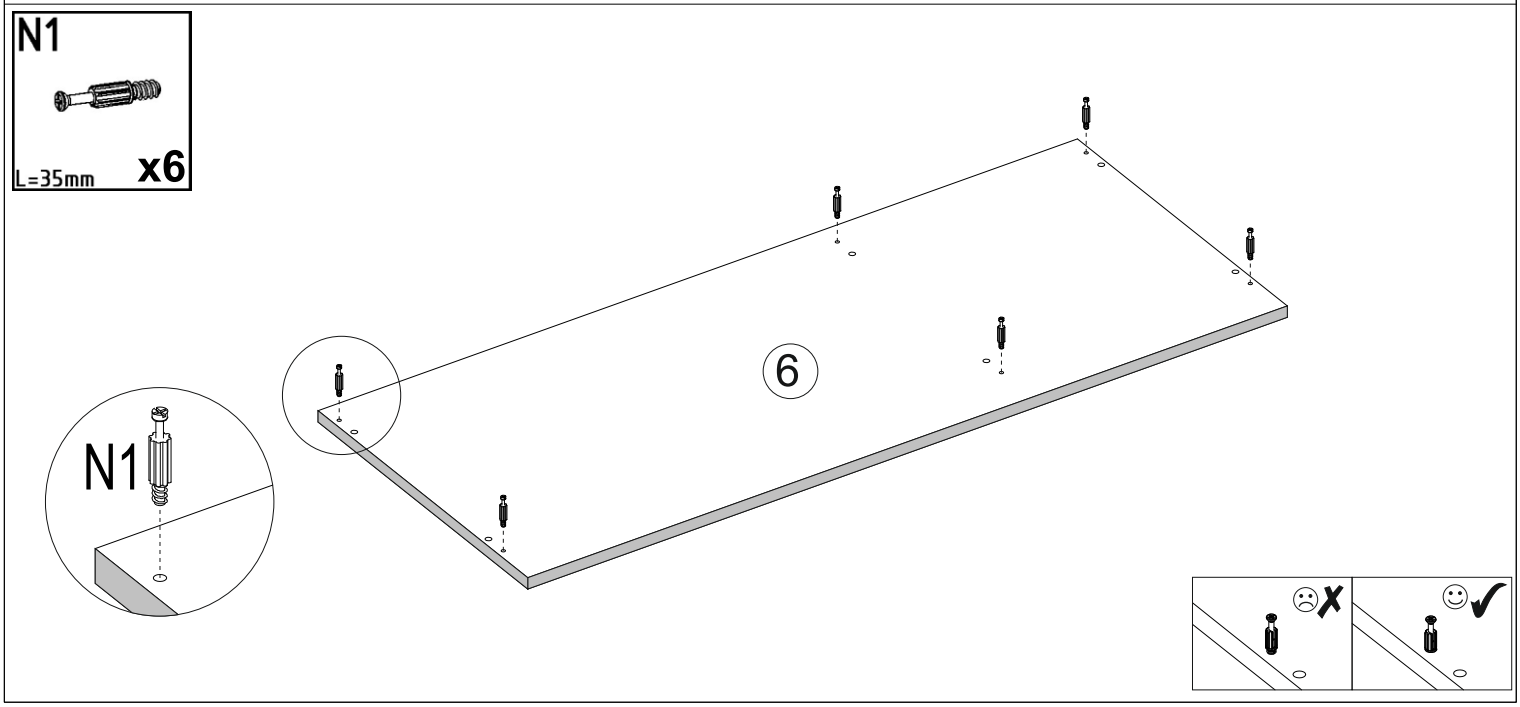
N1
L=35mm
x6
6
N1

V25	S1	F1
 x1	 3,5x16mm x2	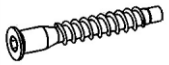 7x50mm x2

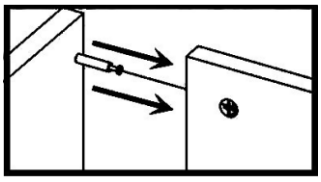

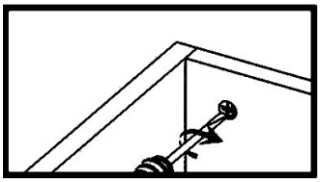

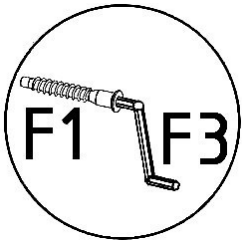

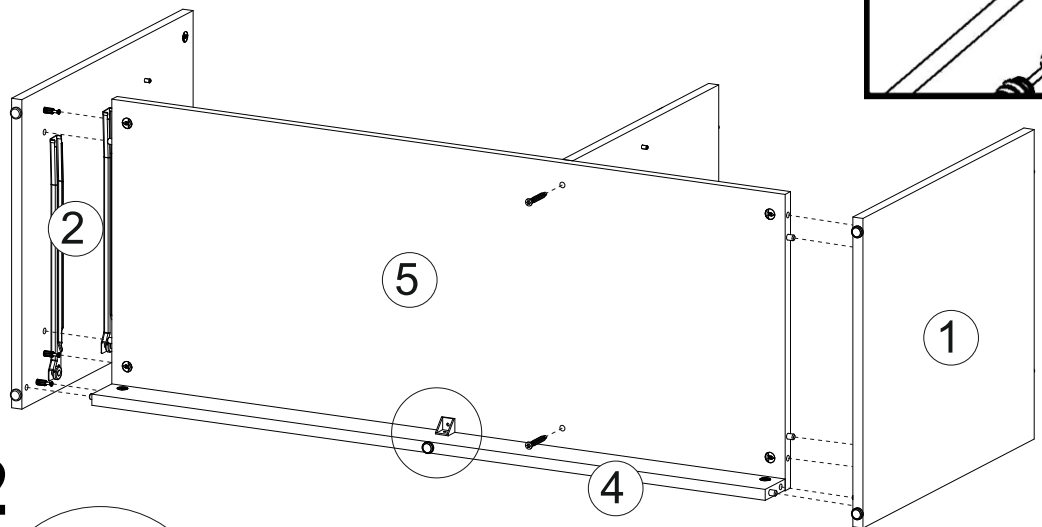

1

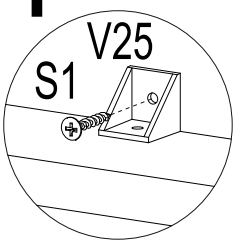

2

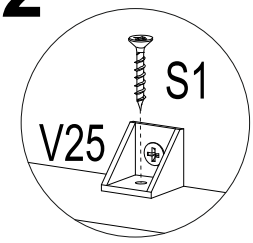

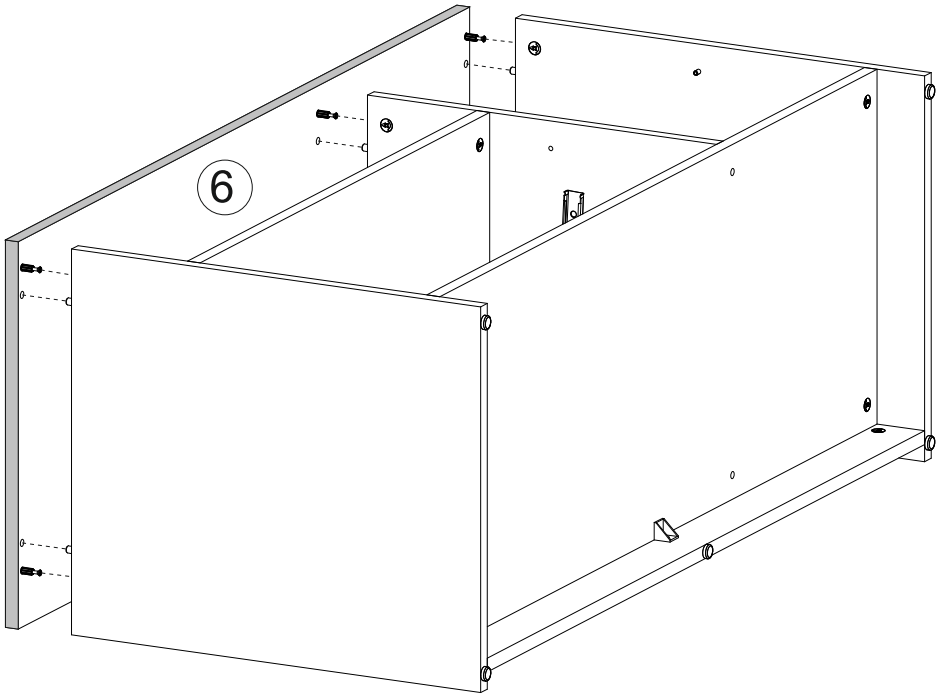

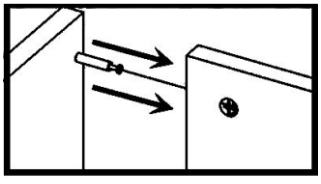

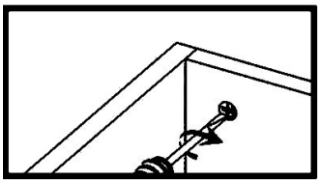

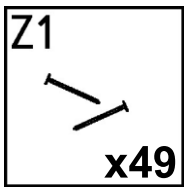
Z1
x49

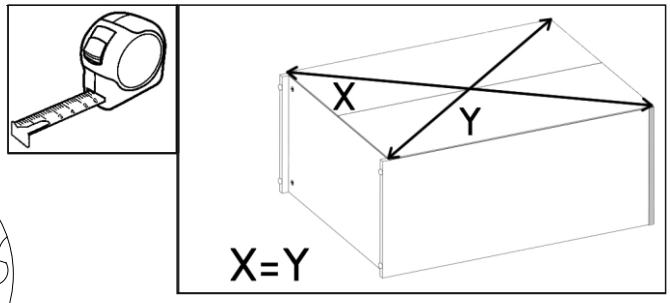
X
Y
X=Y

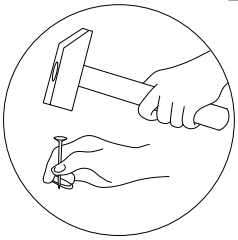

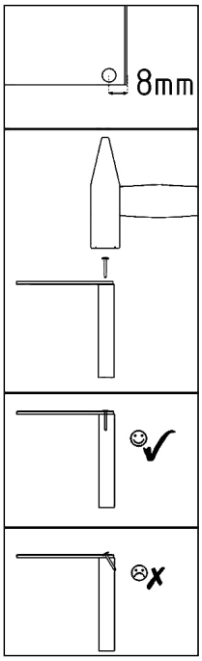
8mm

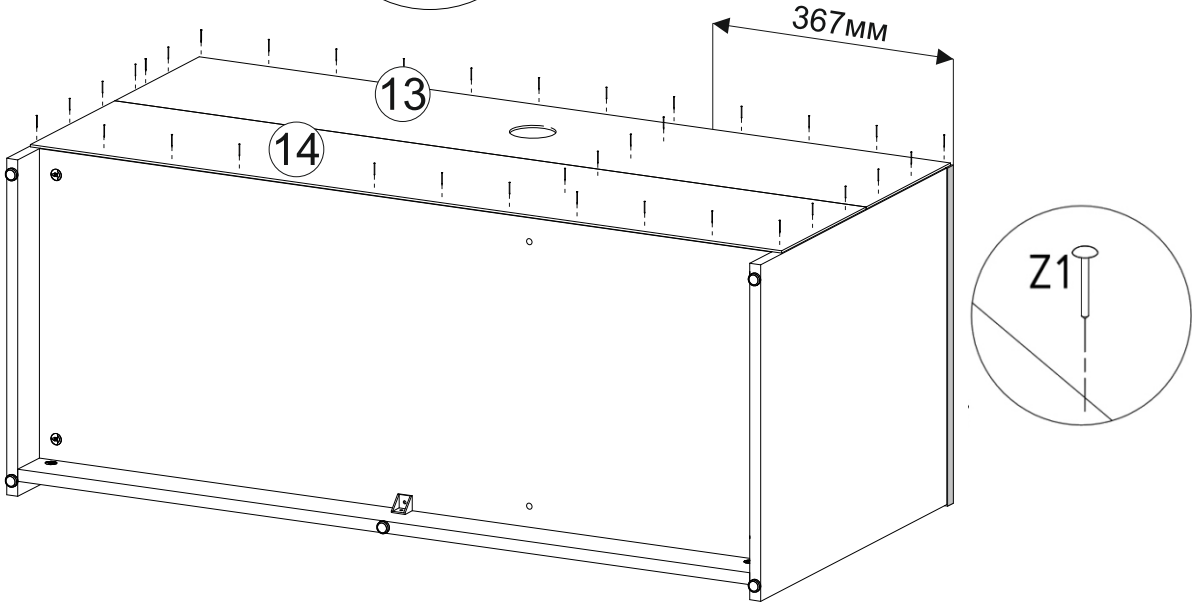
367мм
13
14

Z1

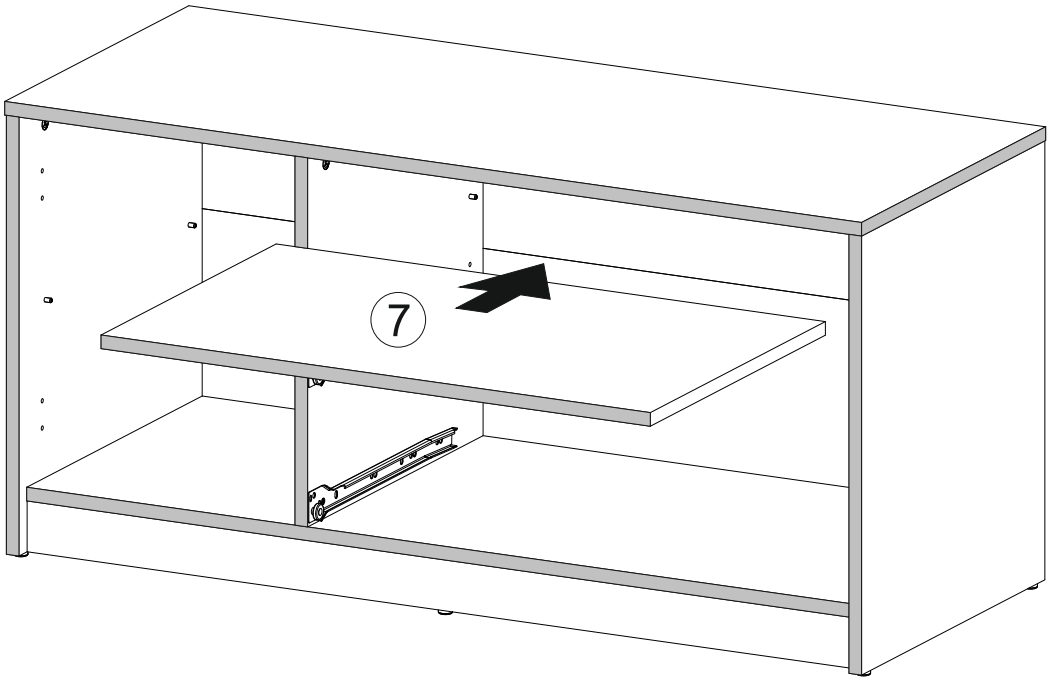
7

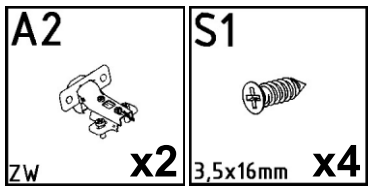
A2
ZW
x2
S1
3,5x16mm
x4

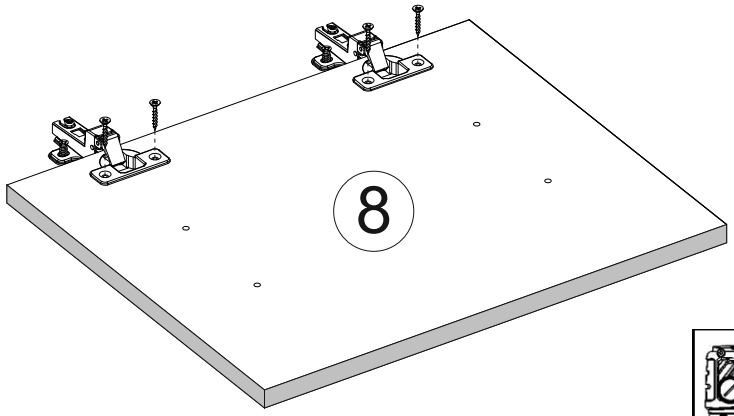
8

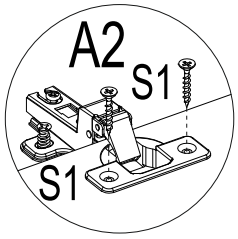
A2
S1
S1

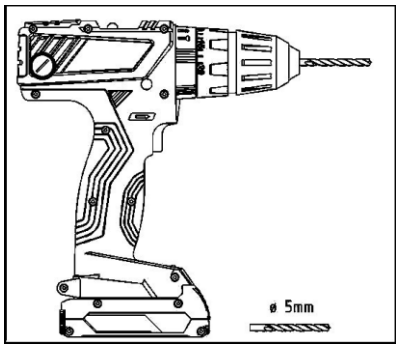
ø 5mm

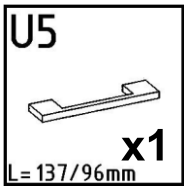
U5
x1
L=137/96mm

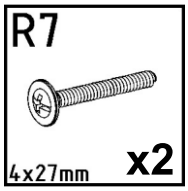
R7
x2
4x27mm


V13
x1

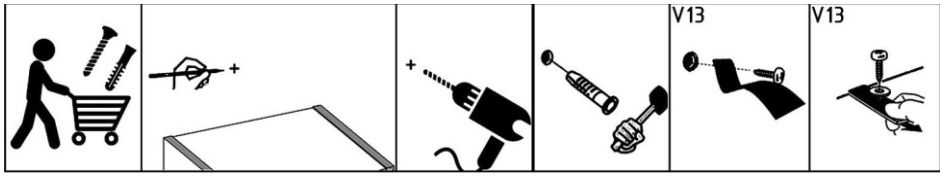
V13
V13

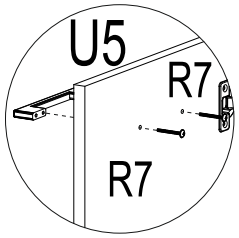
U5
R7
R7

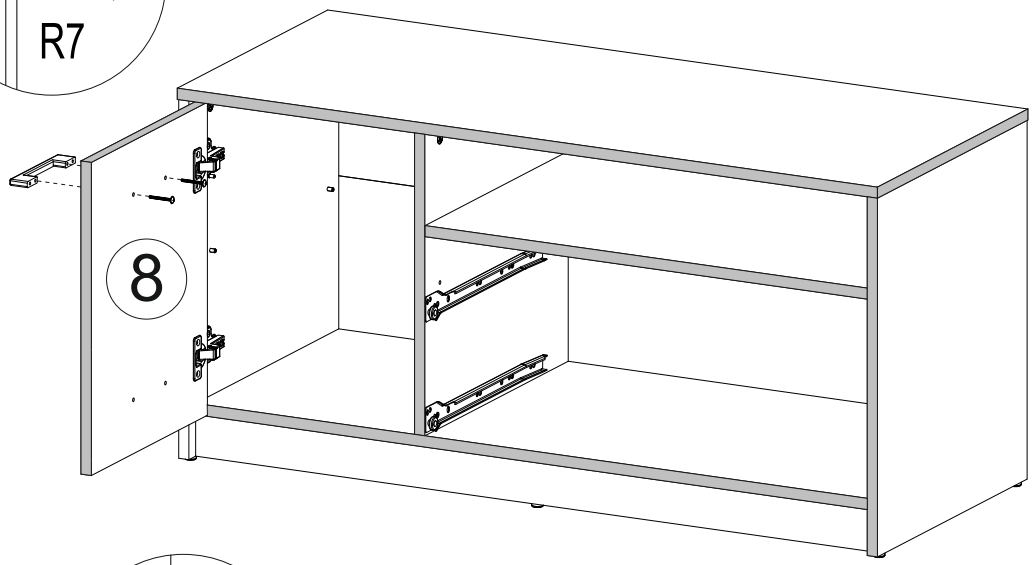
8

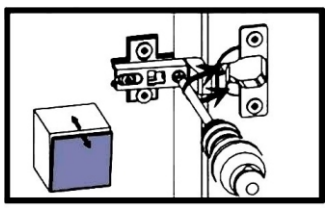

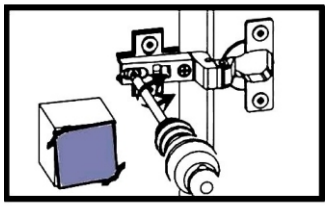

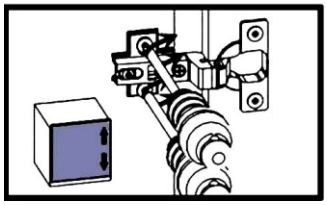

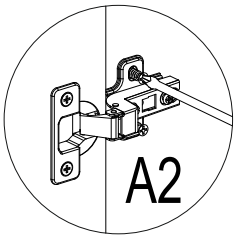
A2

M1



12x15mm x4

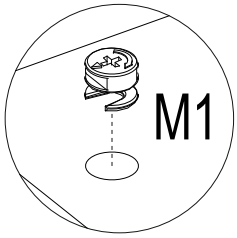

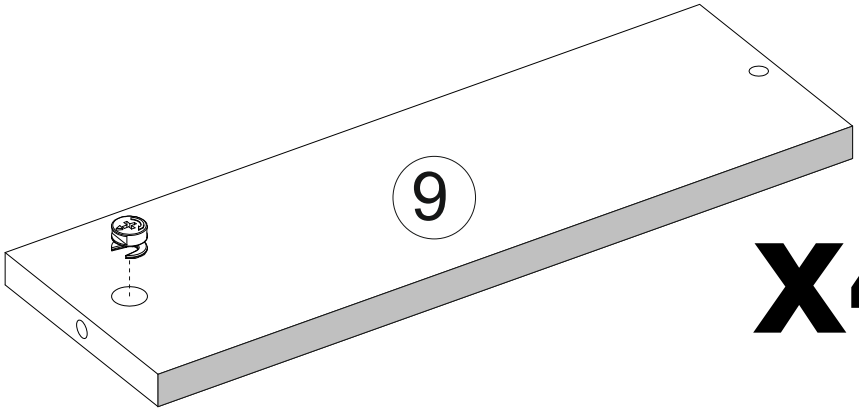

x4

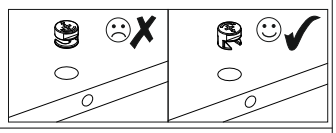

F1

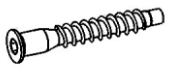

7x50mm x4

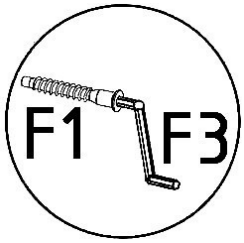

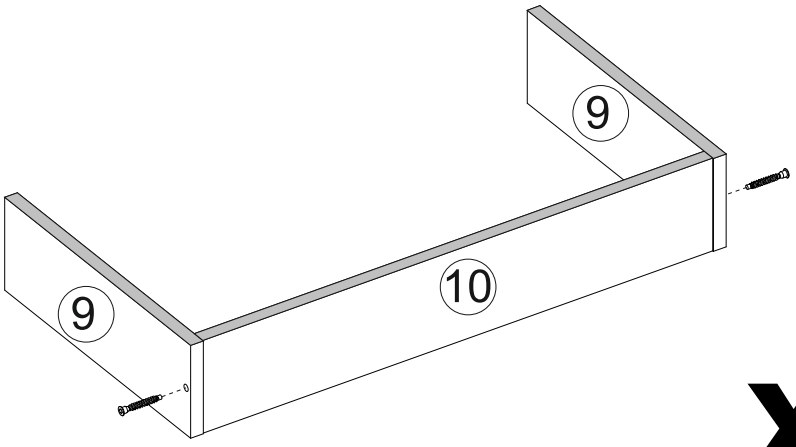

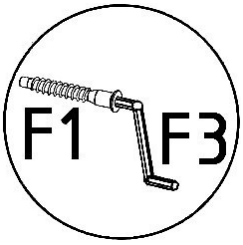

x2

N1



L=35mm x4

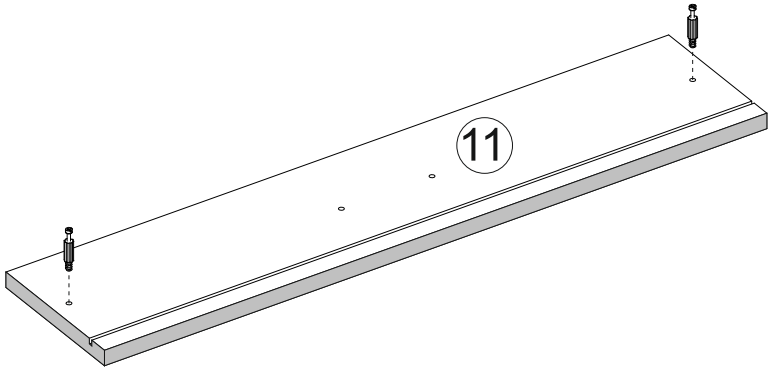

x2

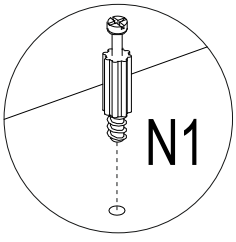

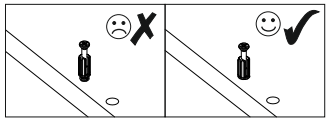

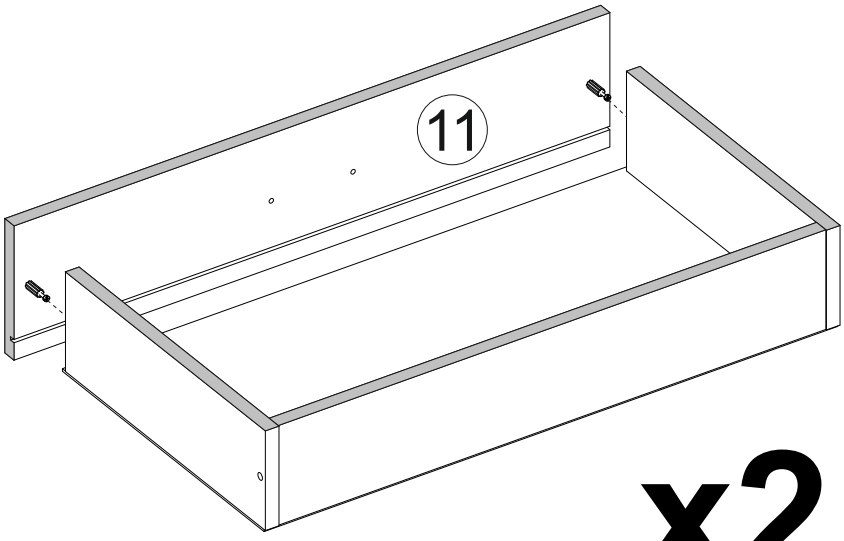

x2

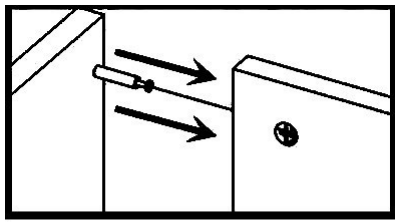

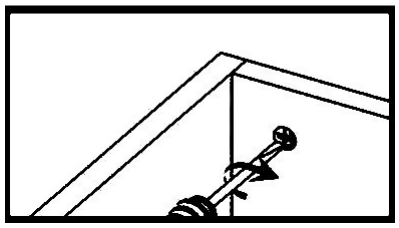

Z1

x14

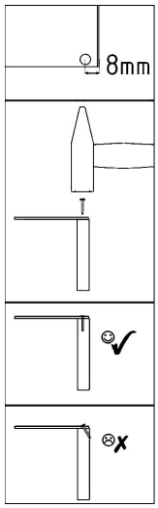

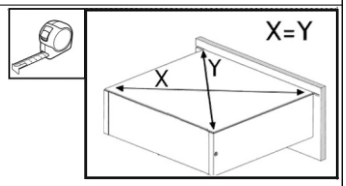

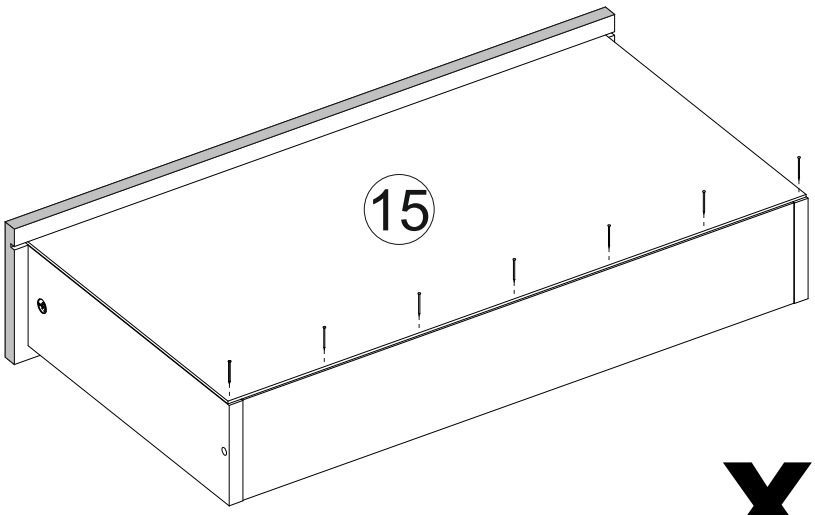

x2

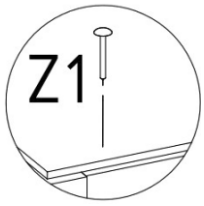

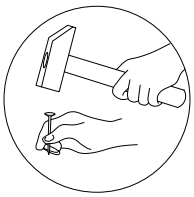

P3



L=350mm x2

S1



3,5x16mm x8

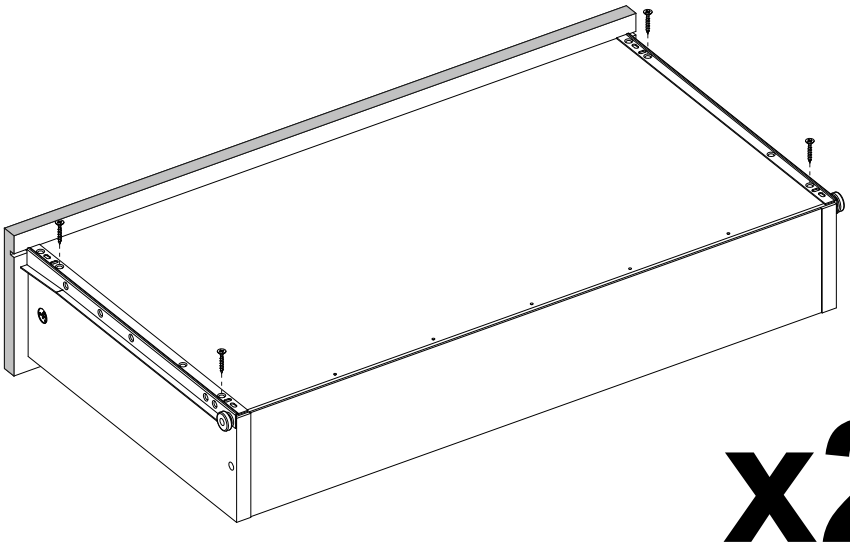

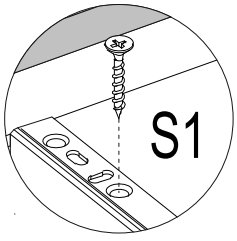

P3



L=350mm x2

x2

U5
x2
L=137/96mm

R7
x4
4x27mm

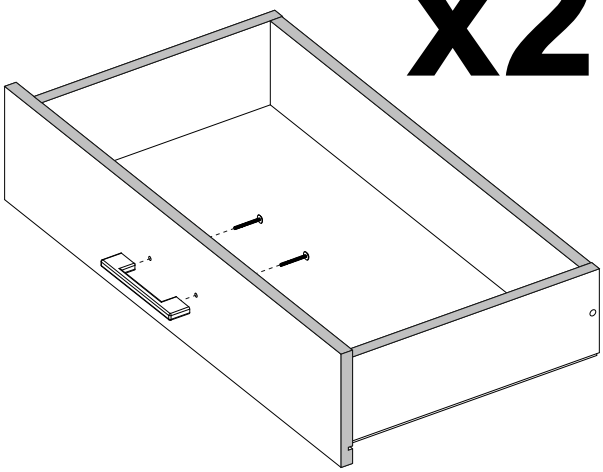

x2

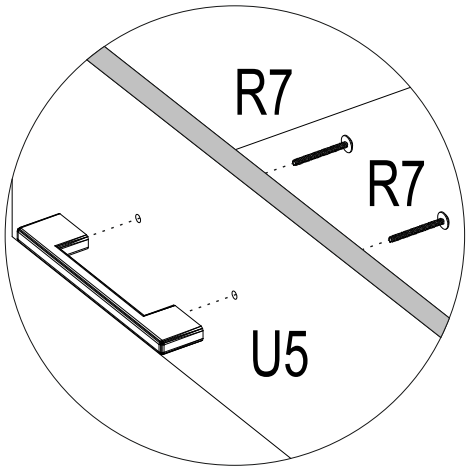

B1
x8
ø17/4mm

