INSTRUKCJA MONTAŻU

Wąska szafka nocna 25 cm z szufladą i otwartą wnęką

Kolor: Dąb Artisan

Kod produktu: OR10464

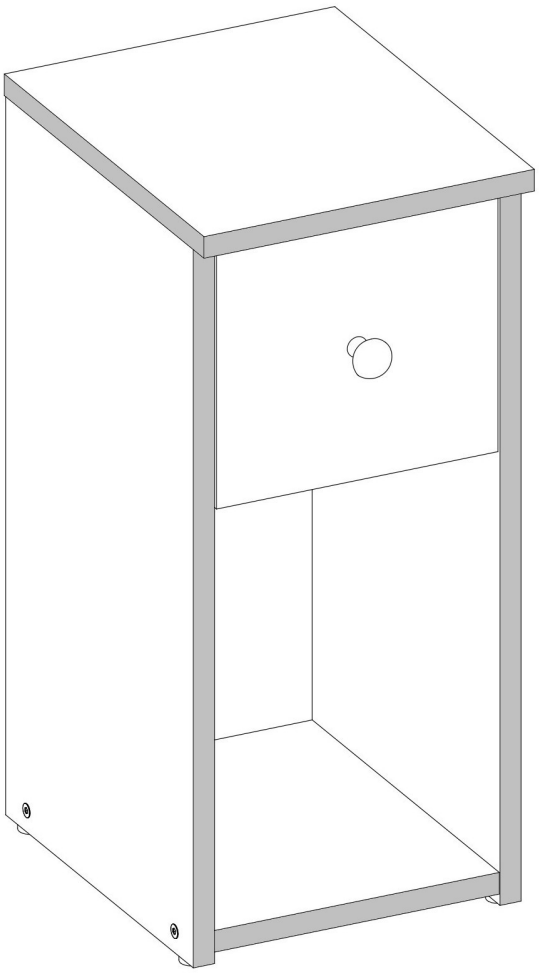

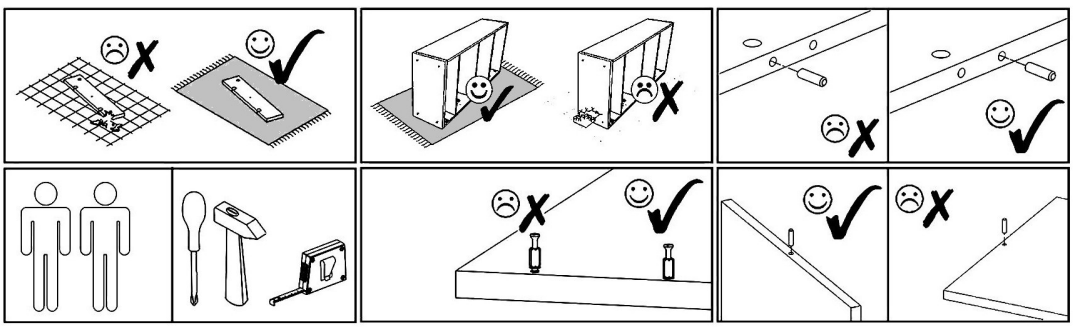

Z1 x15	T1 x4	B2 B ø12/4mm x4	B2 S/A ø12/4mm x4	B2 Ant. ø12/4mm x4	B2 CZ ø12/4mm x4	B1 B ø17/4mm x2	U12 x1
P1 L=250mm x1	R1 6x8mm x4	S1 3,5x16mm x4	F1 7x50mm x6	M1 12x15mm x6	N1 L=35mm x6	E1 8x30mm x8	F3 Hex 4mm x1

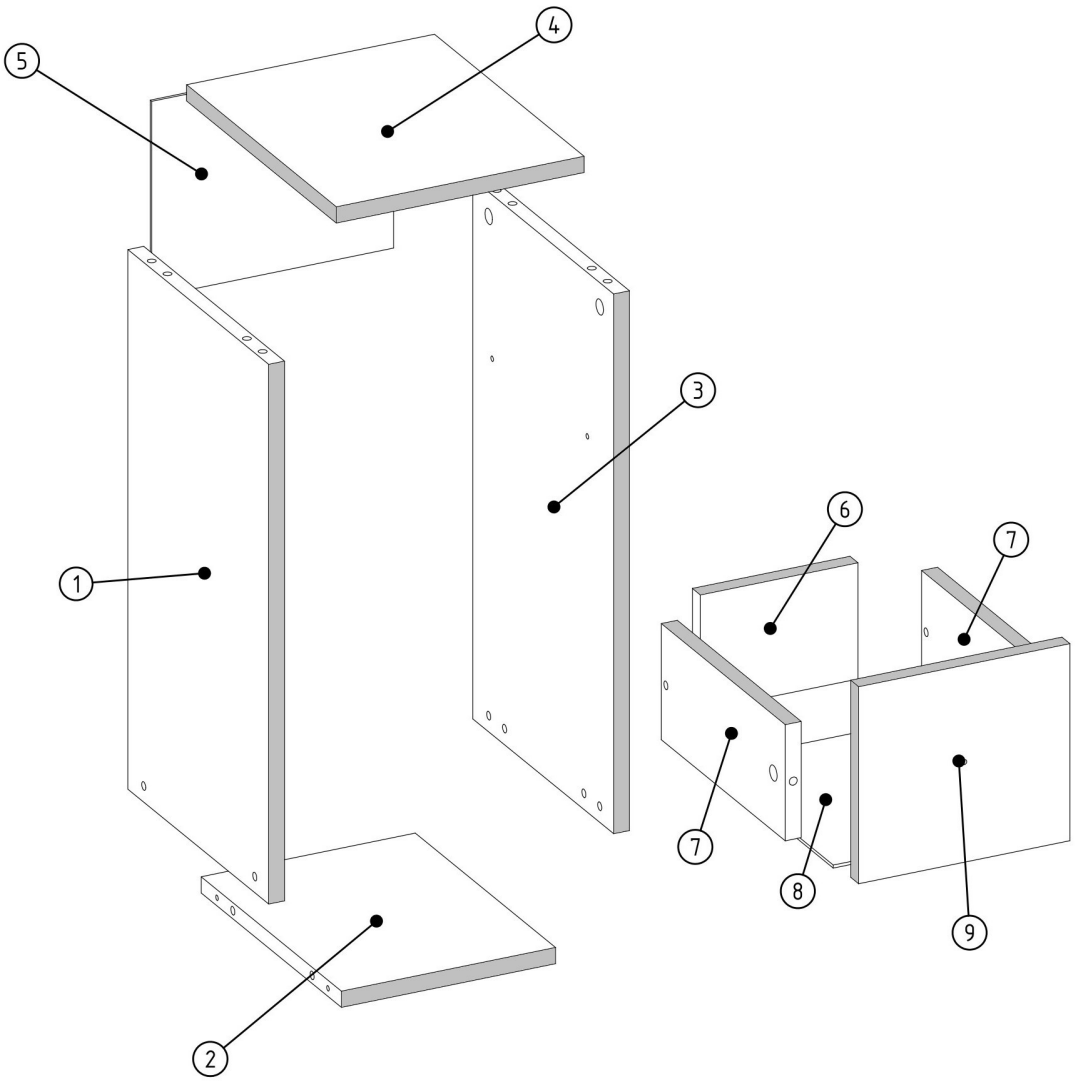

000784	9	1
000719	8	1
000378	7	2
000788	6	1
000785	5	1
000720	4	1
000782	3	1
000786	2	1
000783	1	1
ID	NUMBER	QUANTITY

M1	E1	P1	R1	T1
12x15mm x2	8x30mm x2	L=250mm x1	6x8mm x2	x2

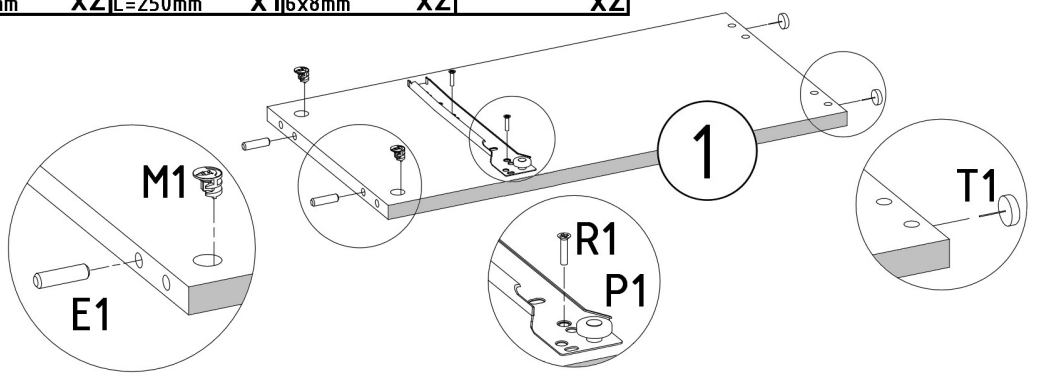

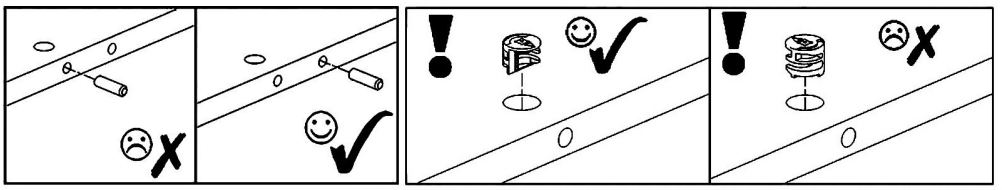

M1	E1	P1	R1	T1
12x15mm x2	8x30mm x2	L=250mm x1	6x8mm x2	x2

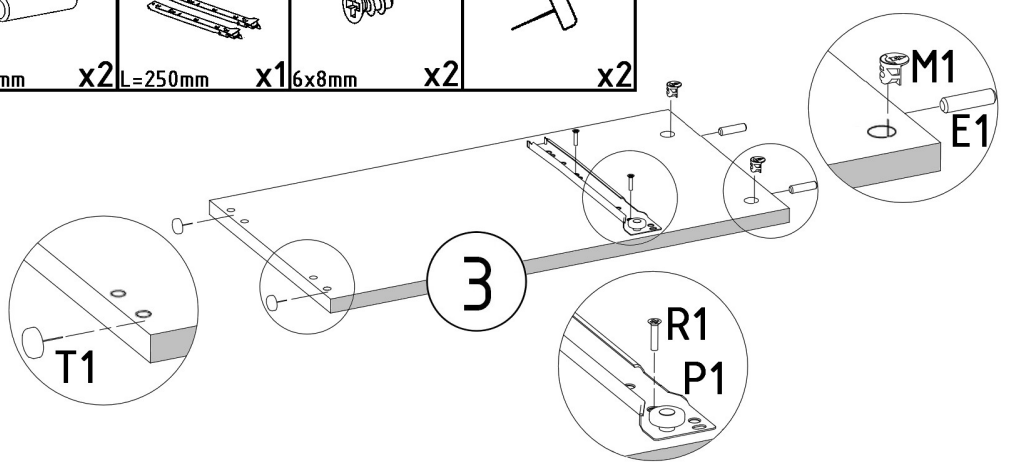

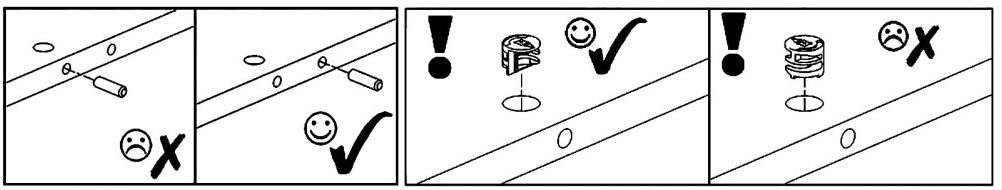

E1
8x30mm x4

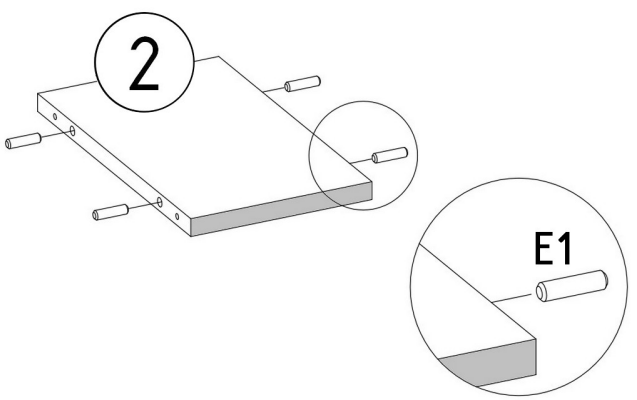

F1

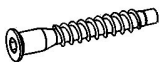

7x50mm x4

F3

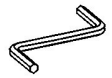

Hex 4mm x1

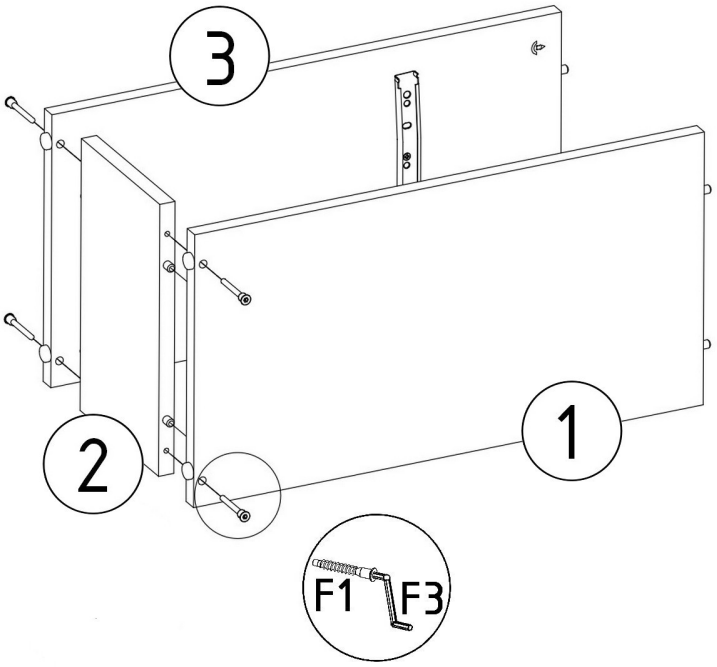

N1



L=35mm x4

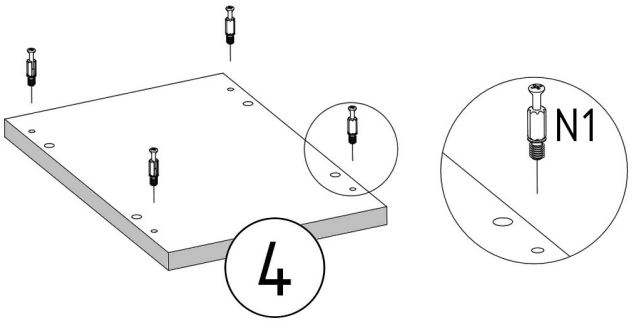

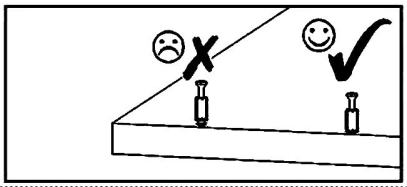

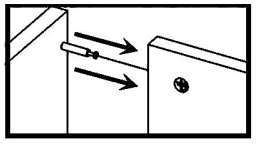

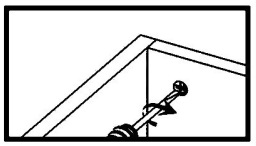

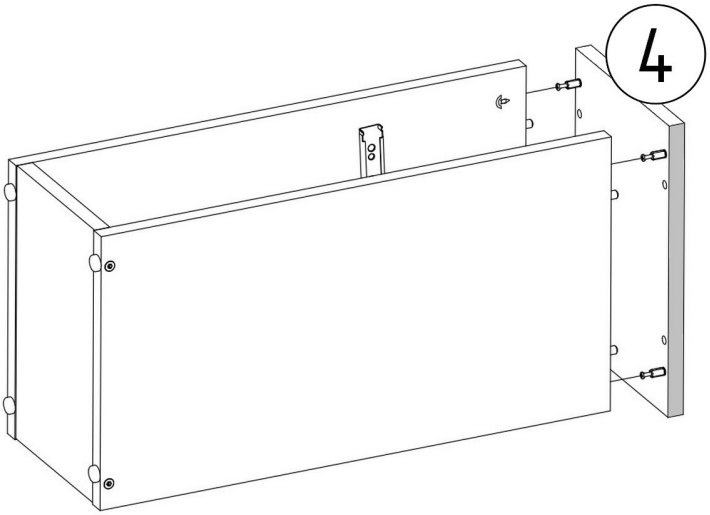

Z1

x10

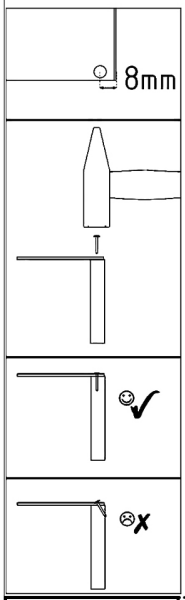

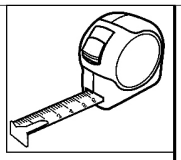

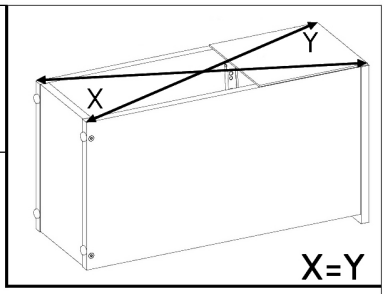

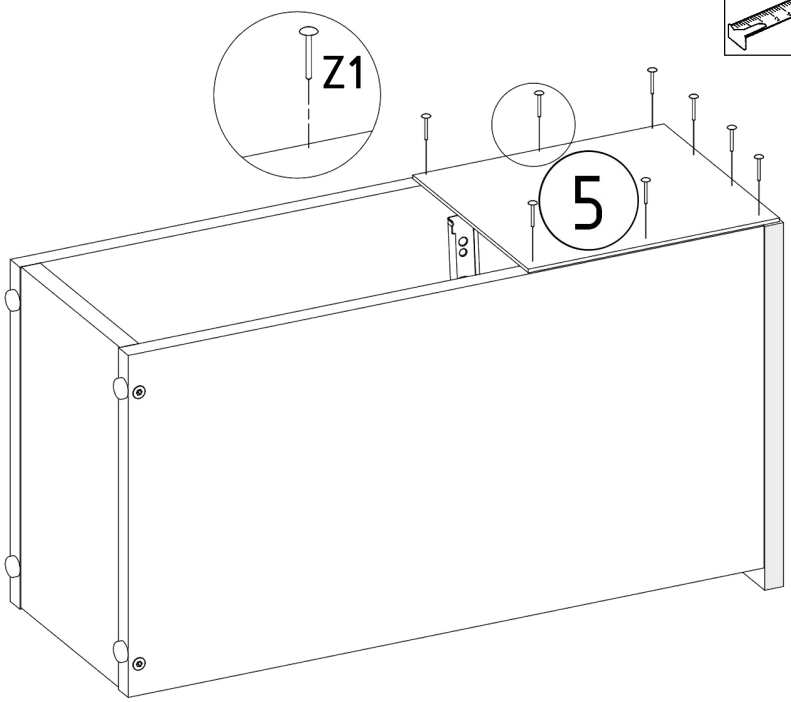

M1

12x15mm x2

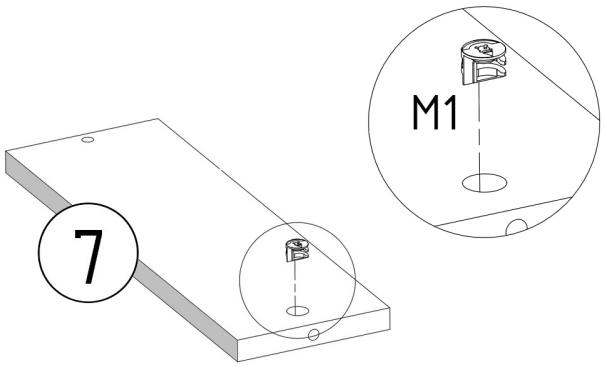

x2

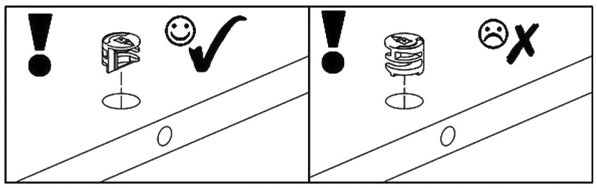

N1

L=35mm x2

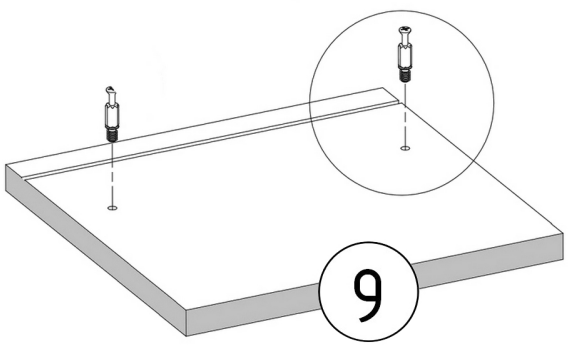

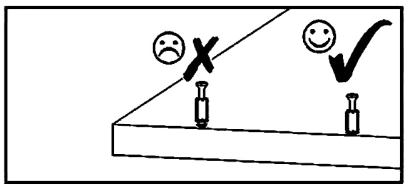

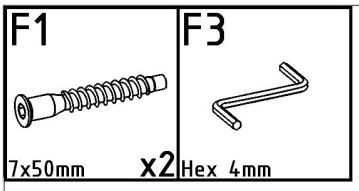
F1
7x50mm
x2
F3
Hex 4mm

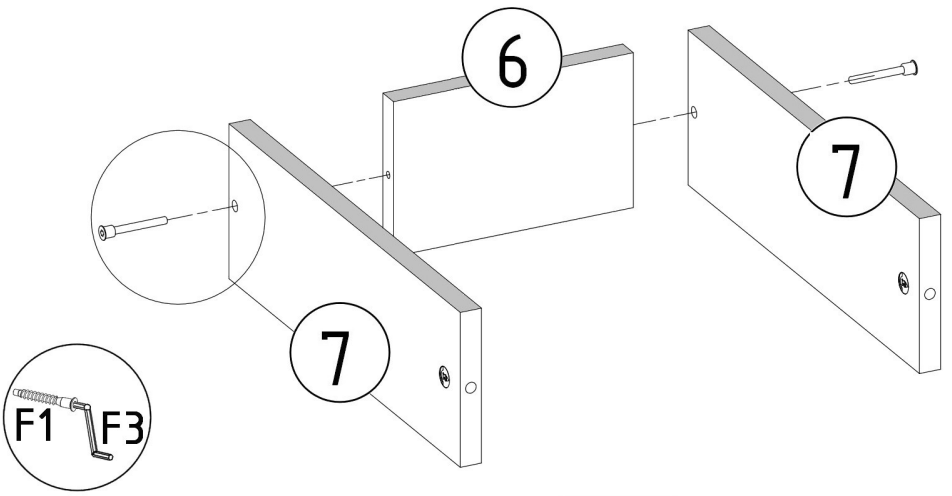
6
7
7
F1
F3

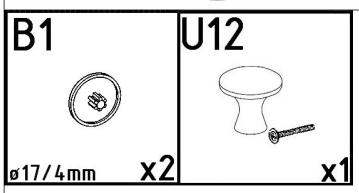
B1
ø17/4mm
x2
U12
x1

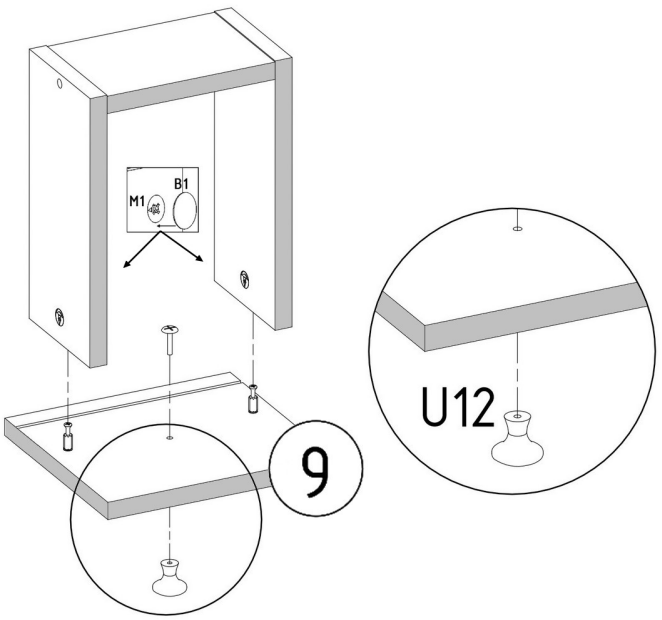
M1
B1
9
U12

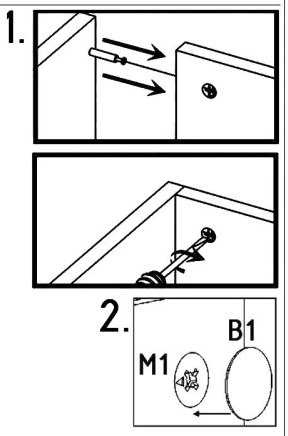
1.
2.
B1
M1

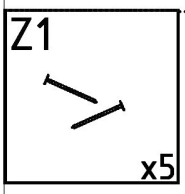
Z1
x5

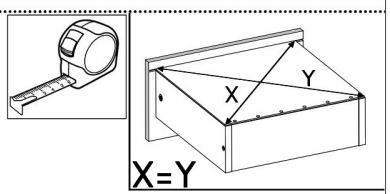
X
Y
X=Y

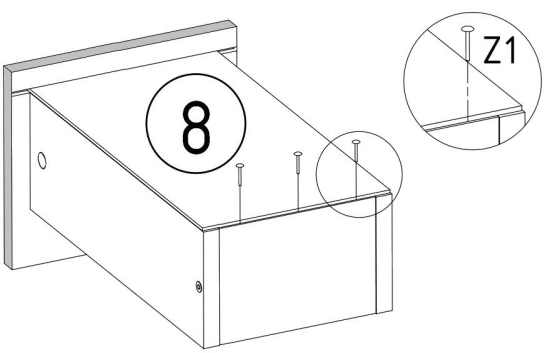
8
Z1

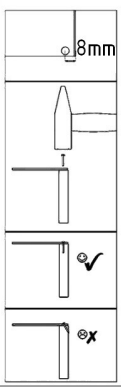
8mm

S1

3,5x16mm x4

P1

L=250mm x1

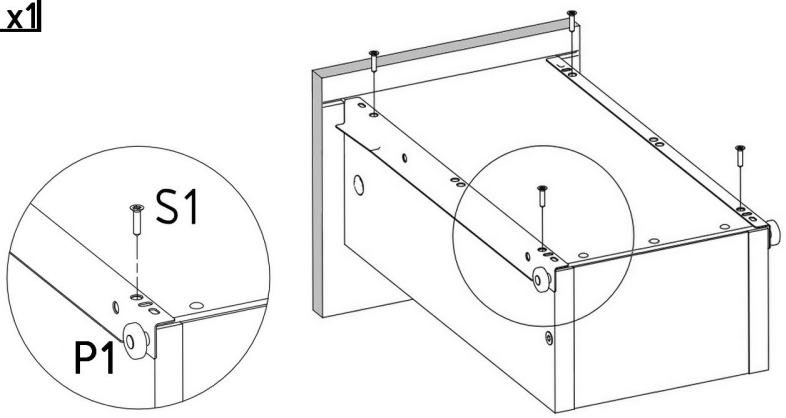

B2

ø12/4mm x4

