Szafa 50 cm

Kaszmir

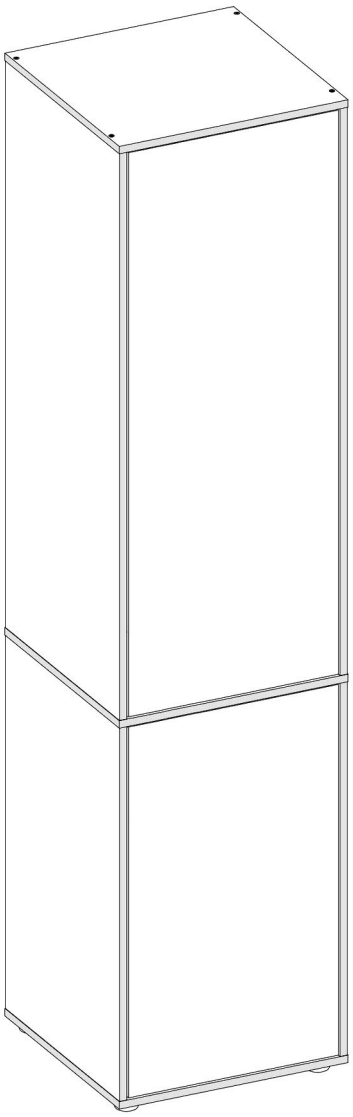

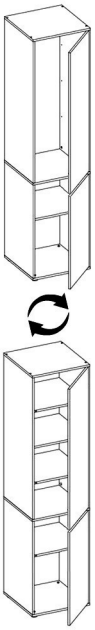

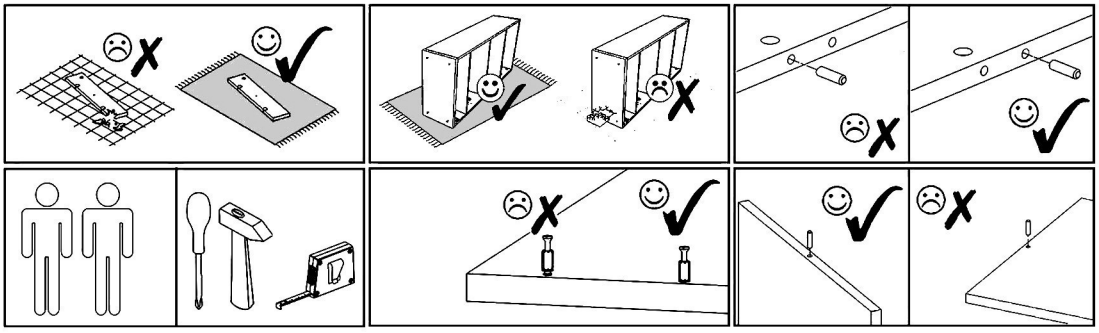

S5 4x30mm x6	V8 L=455mm x1	V35 x2	V53 D=20mm x4

N1 L=35mm x4	M1 12x15mm x12	S1 3,5x16mm x14	E1 8x30mm x12	E3 8x50mm x4	F1 7x50mm x8	F3 x1	V41 x1
V19 x2	Z1 x100	A2 ZW x4	V16 L=16mm x12	T11 x4	V15 x10	N4 L=62mm x4	V23 5,5x10,5mm x4

Szafa 50 cm

Kaszmir

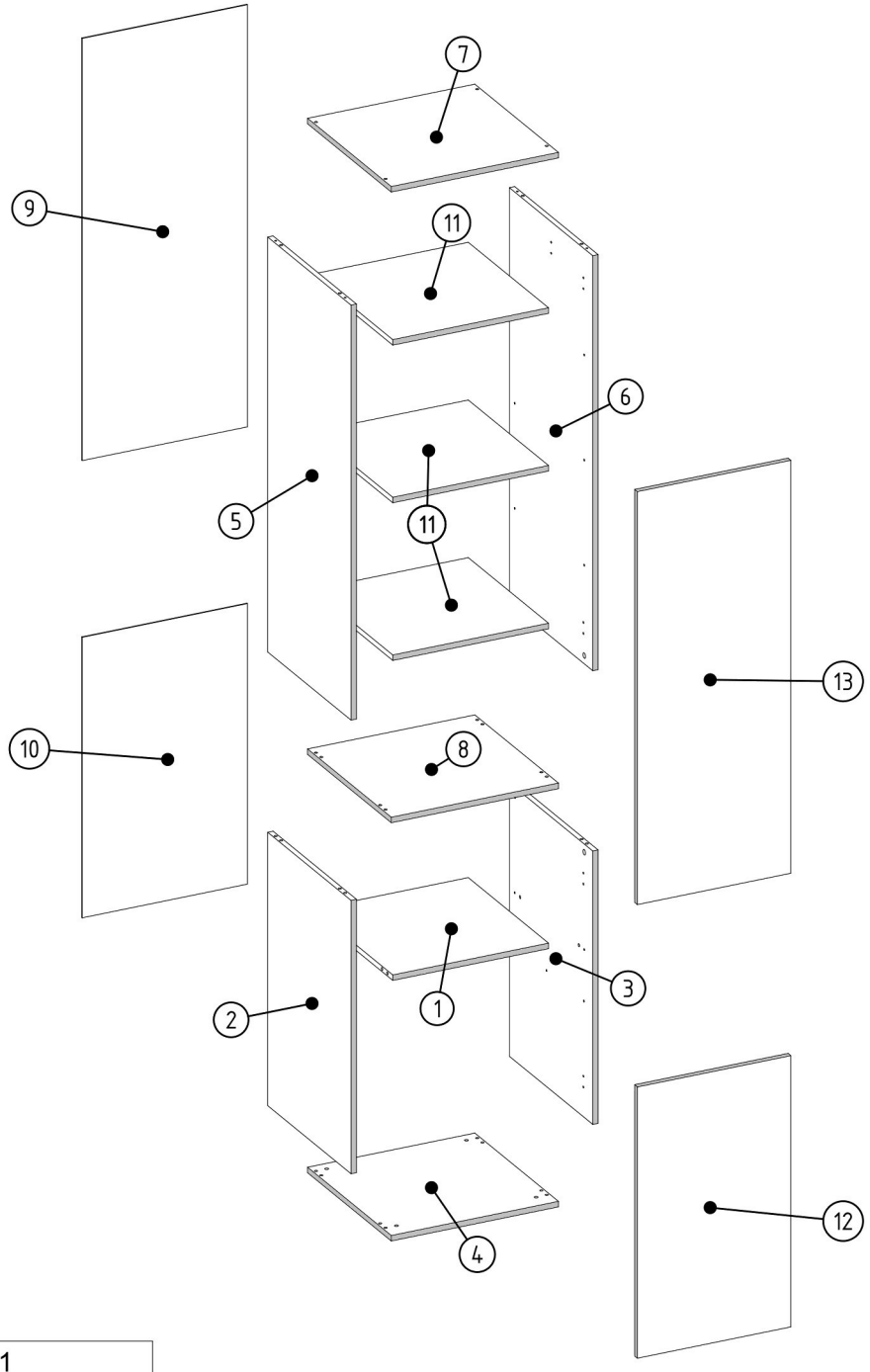

NUMBER	QUANTITY
13	1
12	1
11	3
10	1
9	1
8	1
7	1
6	1
5	1
4	1
3	1
2	1
1	1

M1	E1
	
12x15mm x4	8x30mm x4

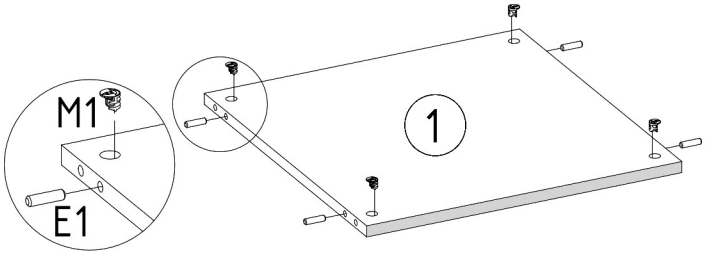

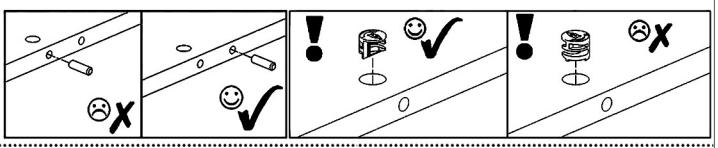

M1	E1	E3	N1
			
12x15mm x2	8x30mm x2	8x50mm x2	L=35mm x2

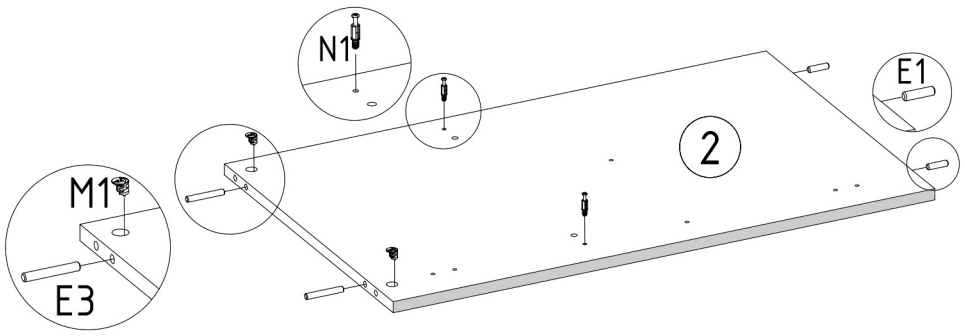

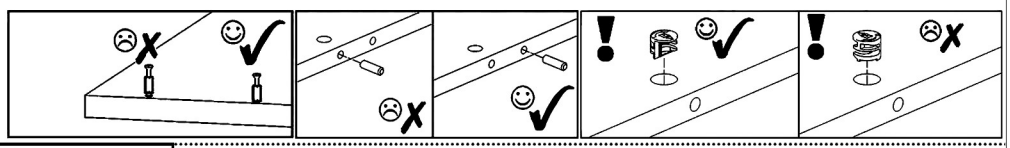

M1	E1	E3	N1
			
12x15mm x2	8x30mm x2	8x50mm x2	L=35mm x2

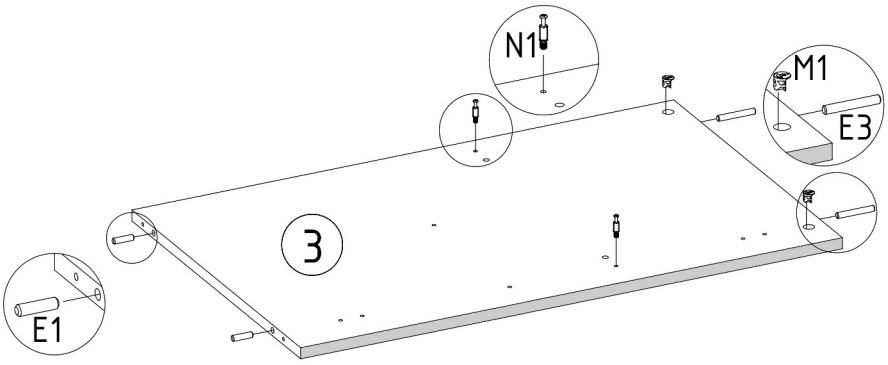

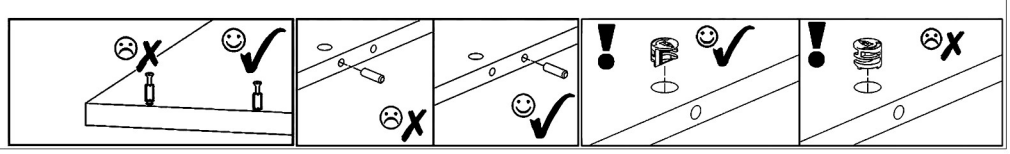

T11



x4

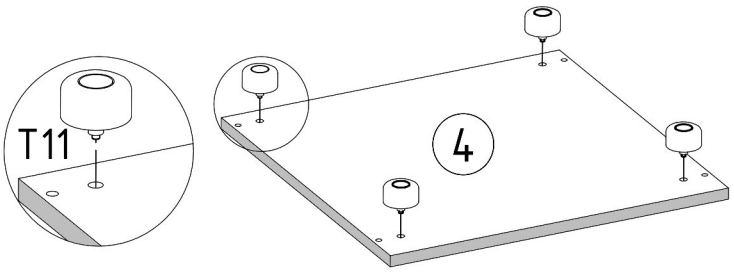

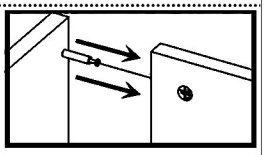

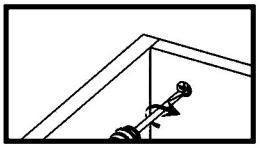

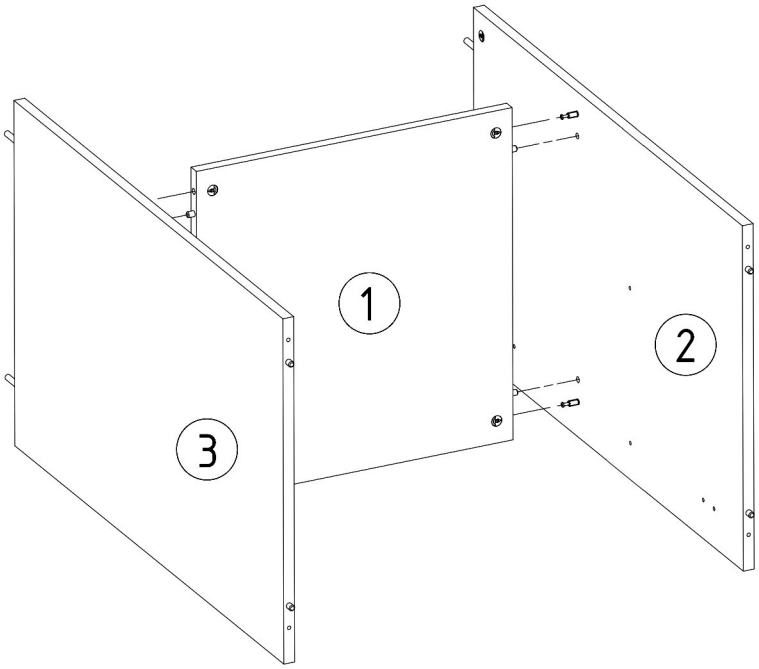

F1

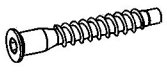

7x50mm x4

F3

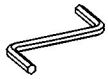

Hex 4mm

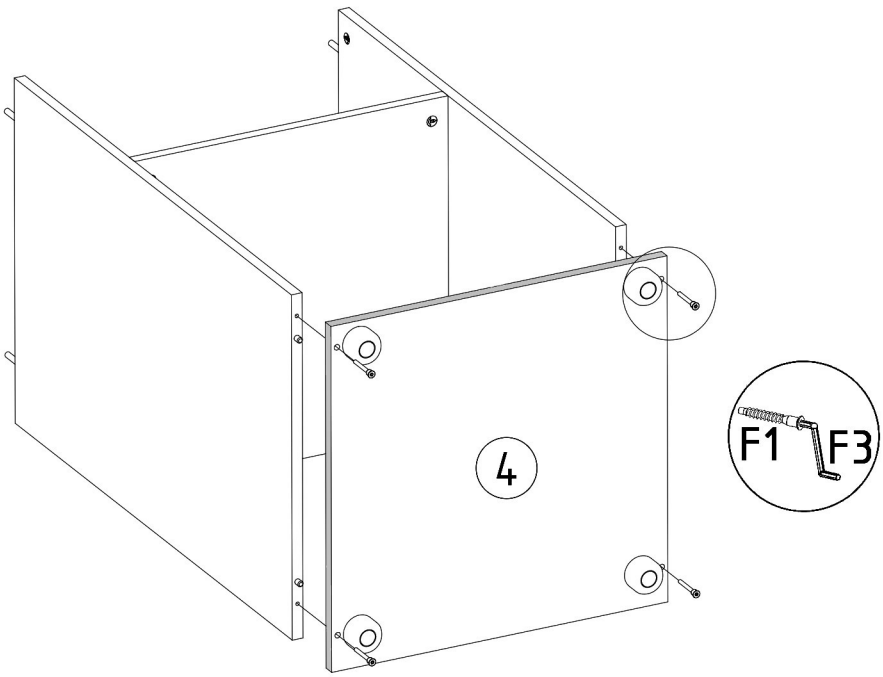

M1	E1	V19
12x15mm x4	8x30mm x4	x2

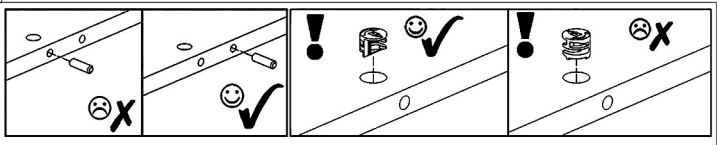

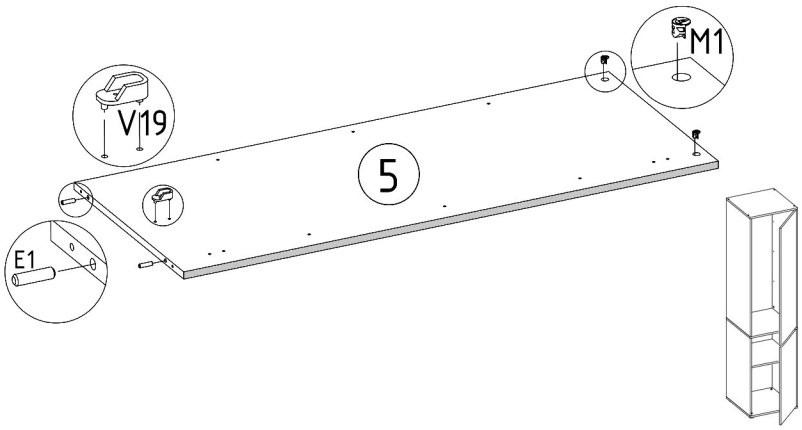

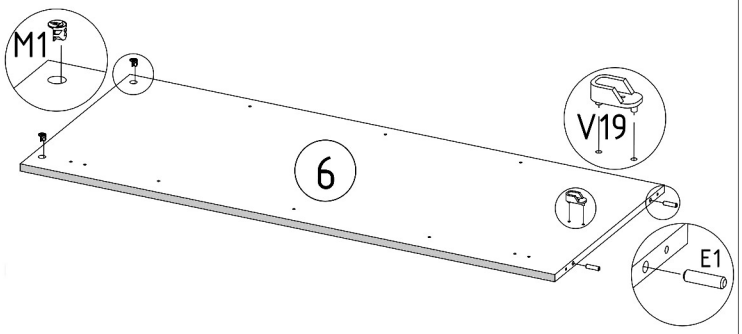

M1	E1	V16
12x15mm x4	8x30mm x4	5x16mm x12

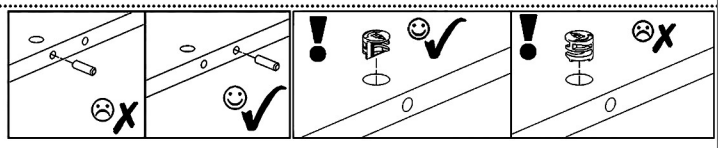

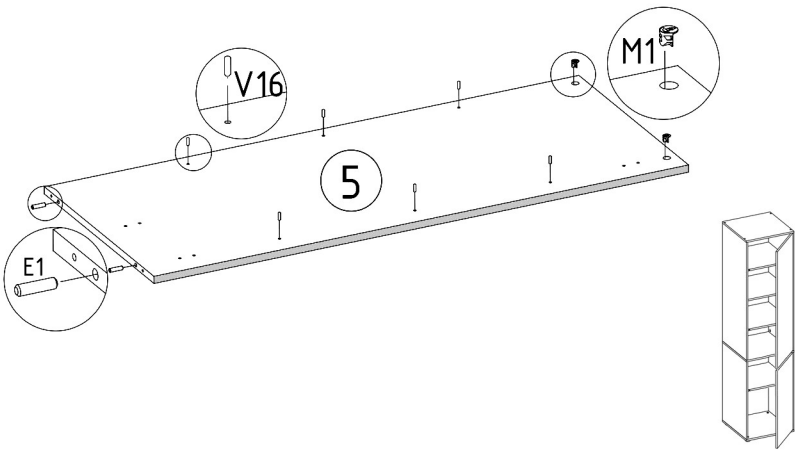

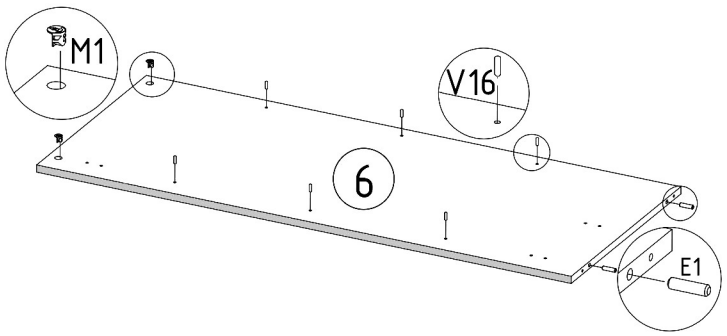

F1	F3
7x50mm x4	Hex 4mm

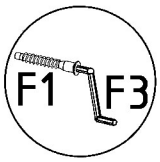

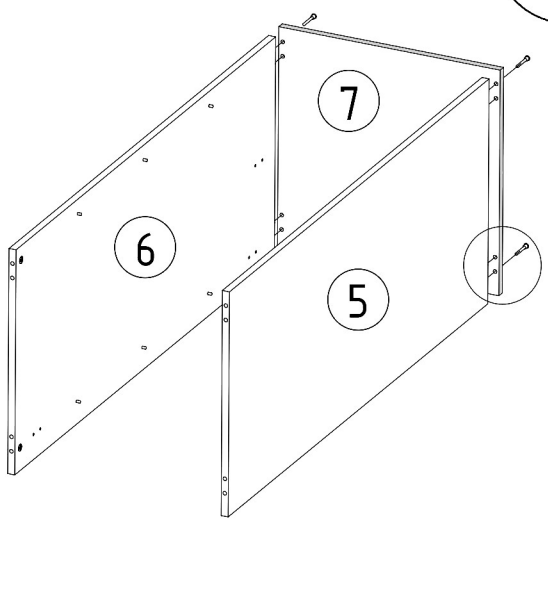

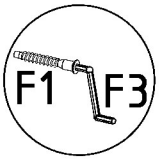

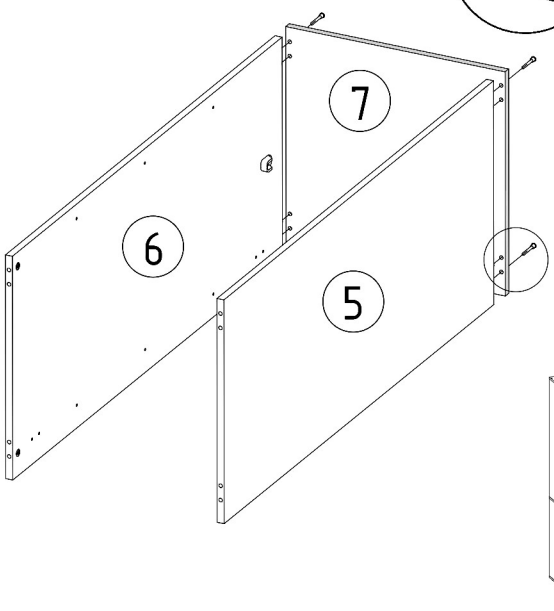

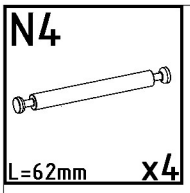
N4
L=62mm
x4

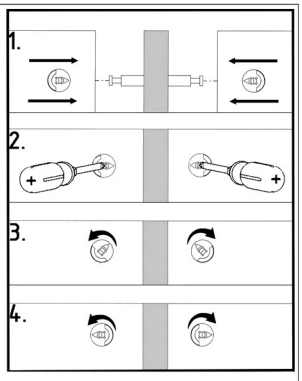
1.
2.
3.
4.

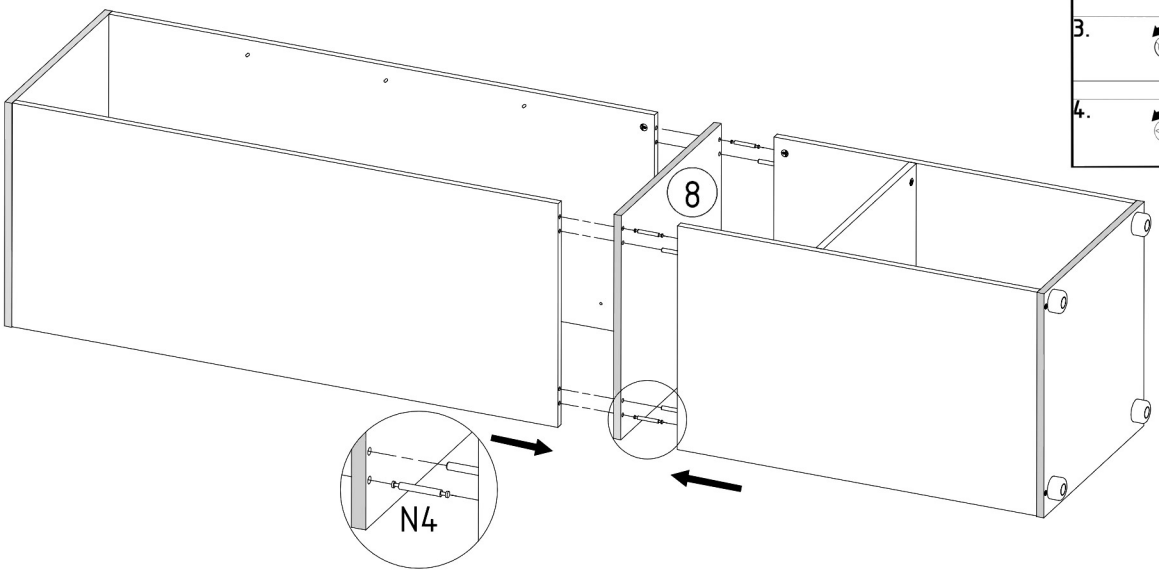
8
N4

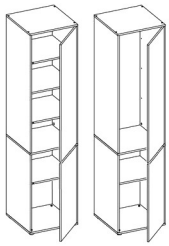

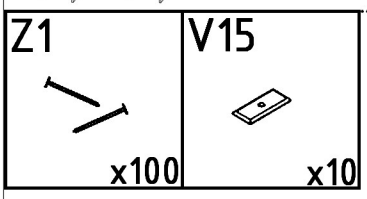
Z1
x100
V15
x10

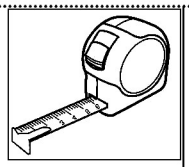

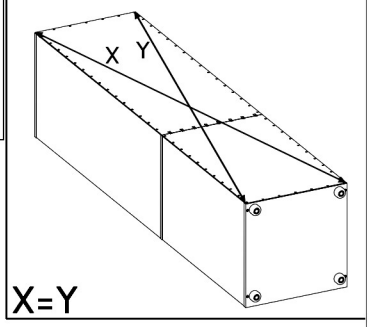
X Y
X=Y

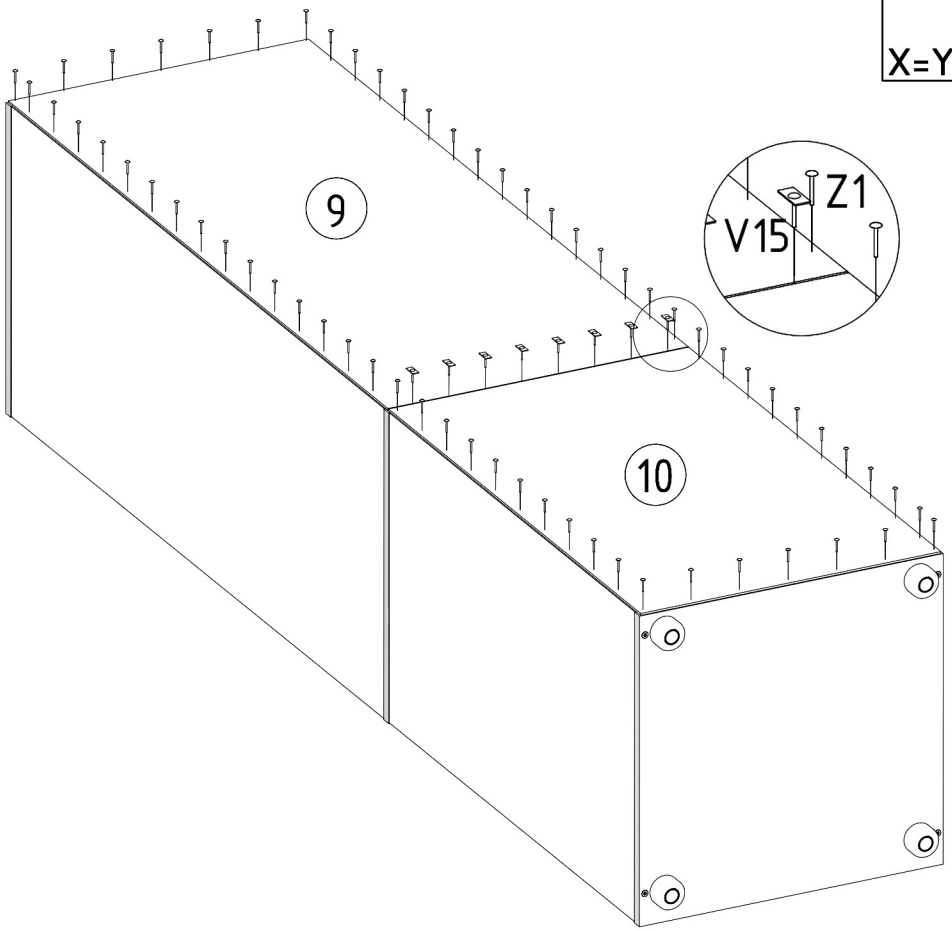
9
10
Z1
V15

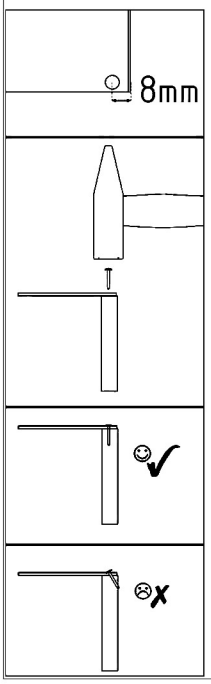
8mm

A2	S1
	
ZW x4	3,5x16mm x8

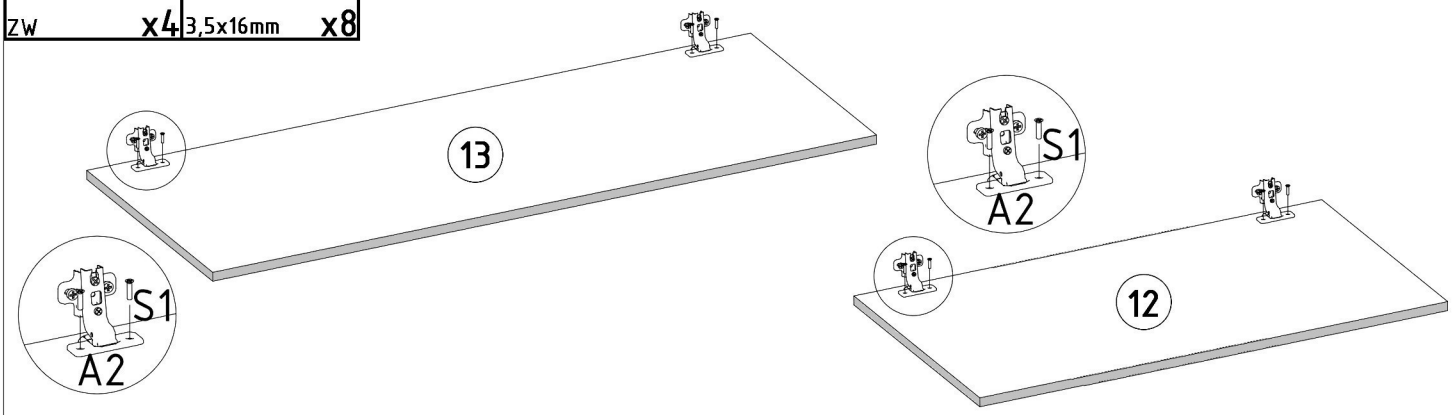

F3	V41	S1	V35	V23	V53
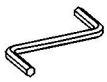					
Hex 4mm	x1	3,5x16mm x6	x2	5,5x12mm x4	D=20mm x4

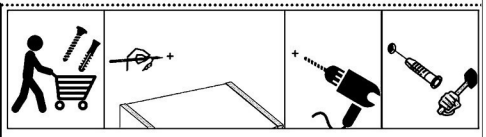

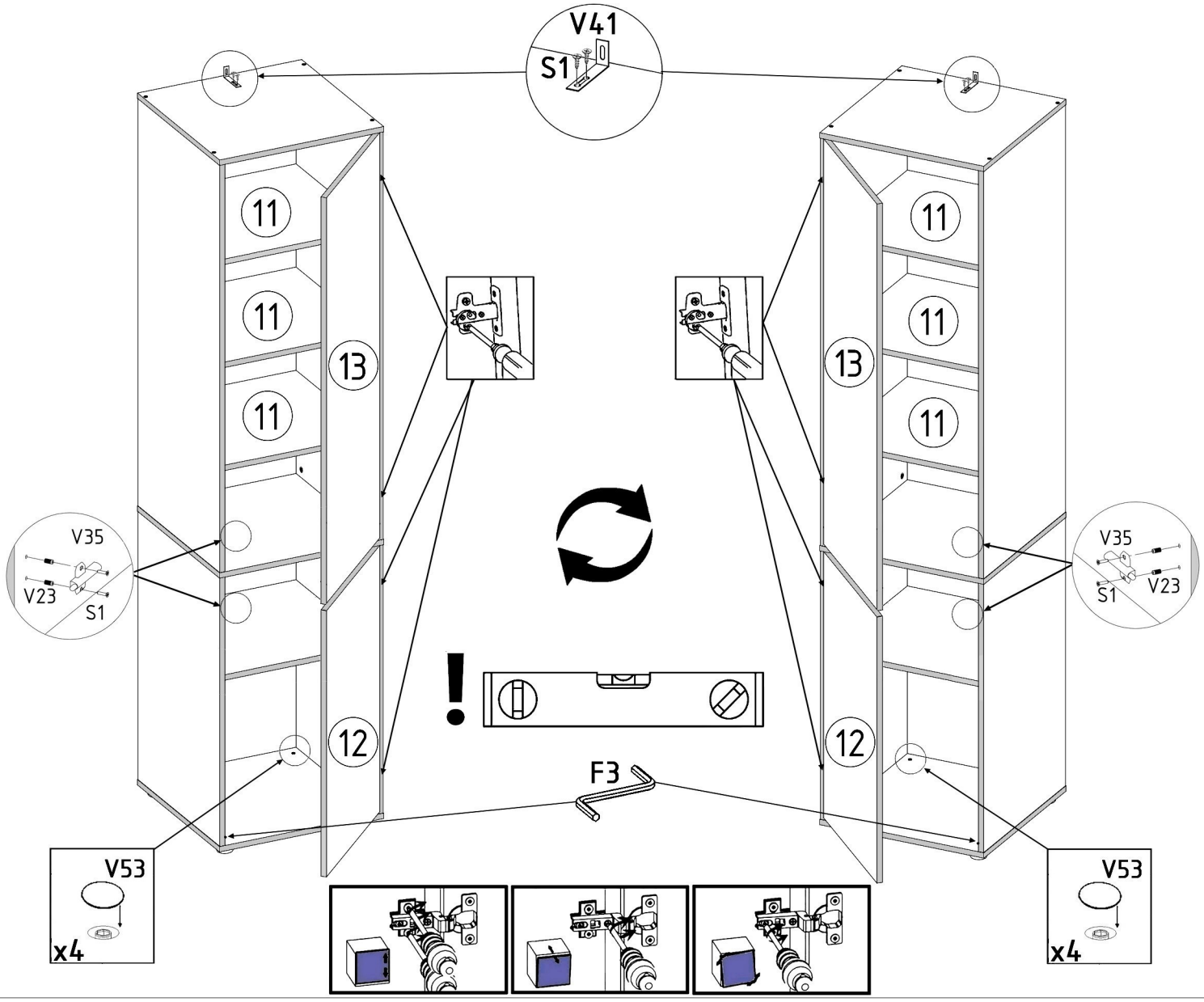

V8	V35	V23	F3	V41	S1
L=455mm x1	x2	5,5x12mm x4	Hex 4mm	x1	3,5x16mm x6

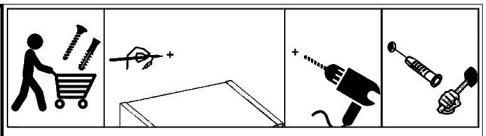

V53
D=20mm x4

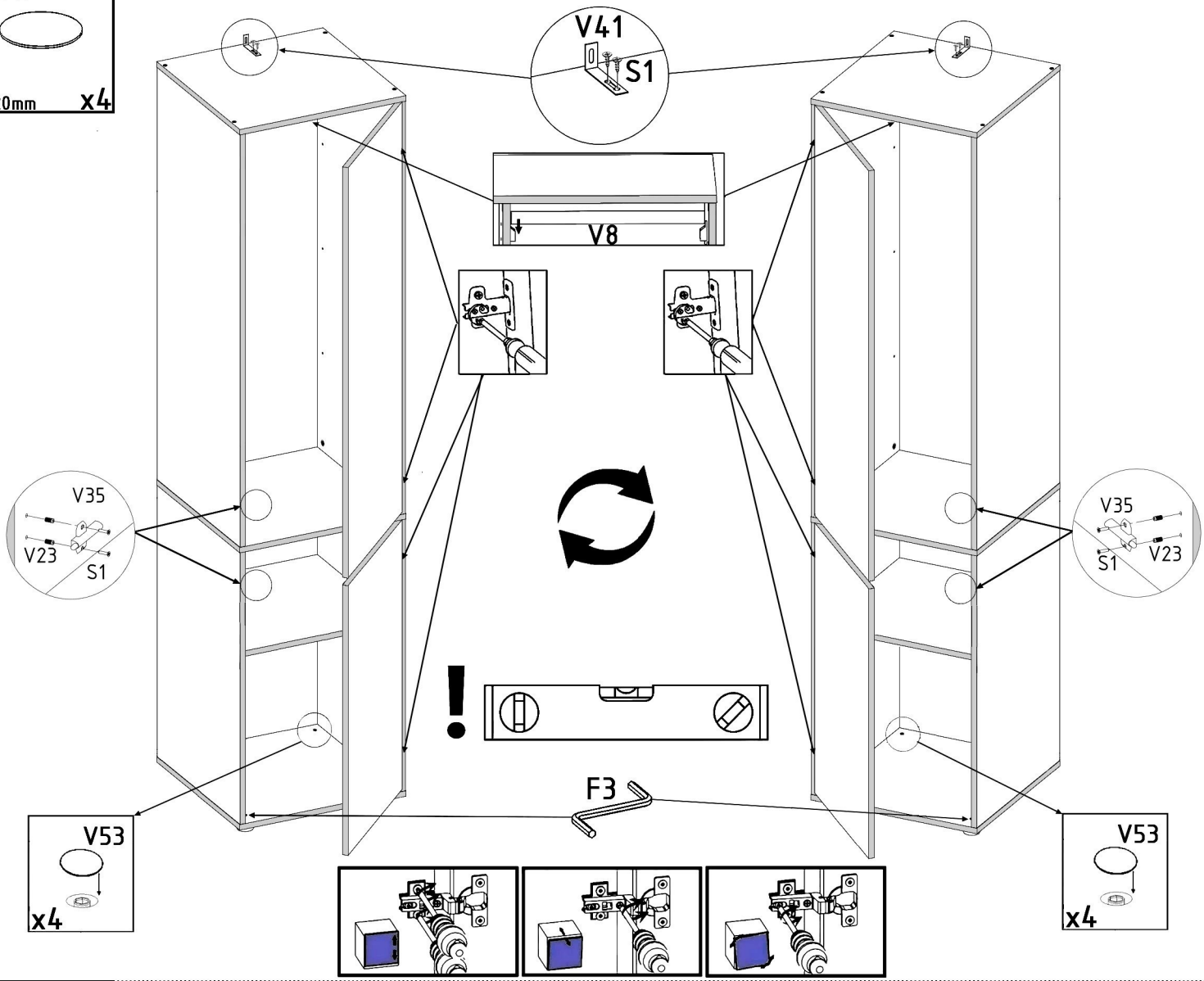

S5
4x30mm x6

