INSTRUKCJA MONTAŻU

Komoda 125 cm z szafką i 4 szufladami TIP-ON

Kolor: Kaszmir

Kod produktu: OR10204

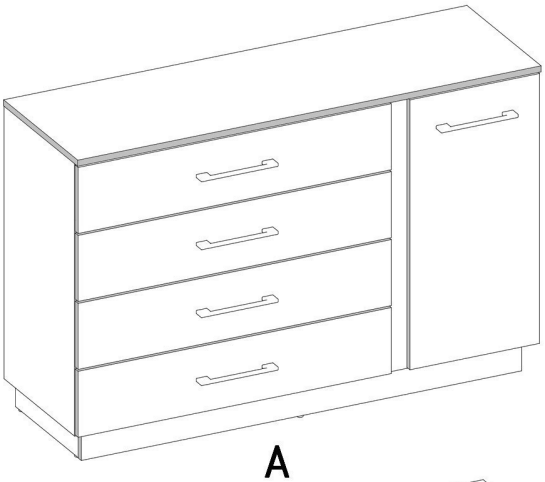

A

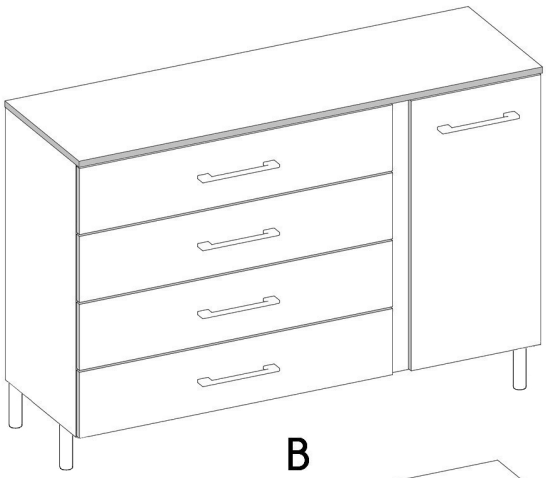

B

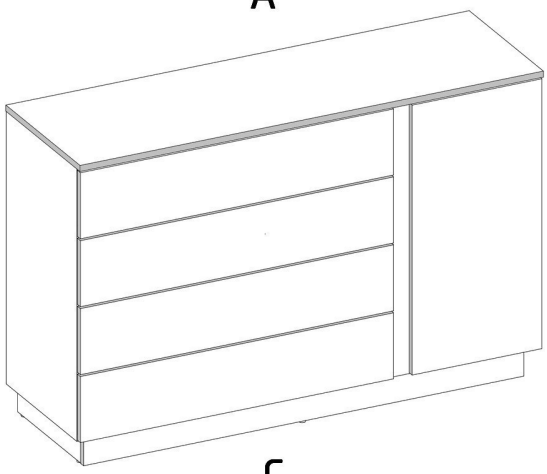

C

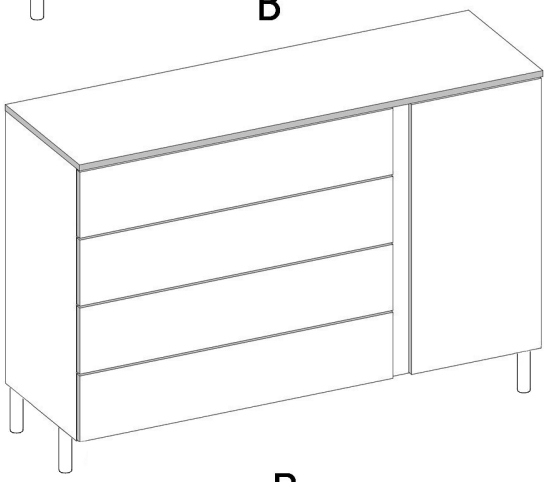

D

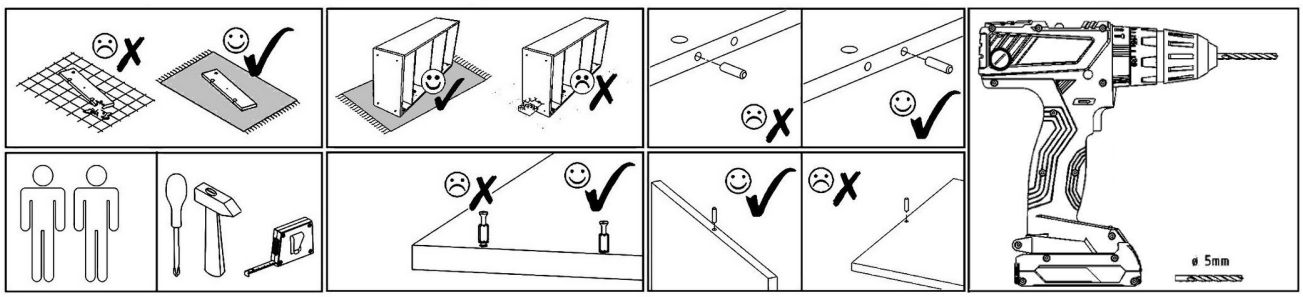

V12  x1							
B1  B ø17/4mm x8	V13  x1	V25  x4	V39  x2	T4 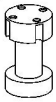 H=100mm x1	R2  6x13mm x8	V16  5x16mm x4	A1  ZP x2
N1  L=35mm x28	S1  3,5x16mm x48	R7  4x27mm x10	T1  x5	U6  L=208/160 x5	T6 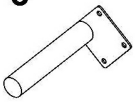 H=100mm x4	V62 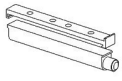 x8	V7 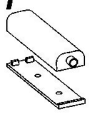 x1
F1 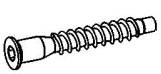 7x50mm x10	F3 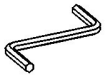 Hex 4mm x1	E1  8x30mm x28	Z1  x80	R1  6x8mm x18	S9  4x16mm x12	P3  L=350mm x4	M1  12x15mm x28

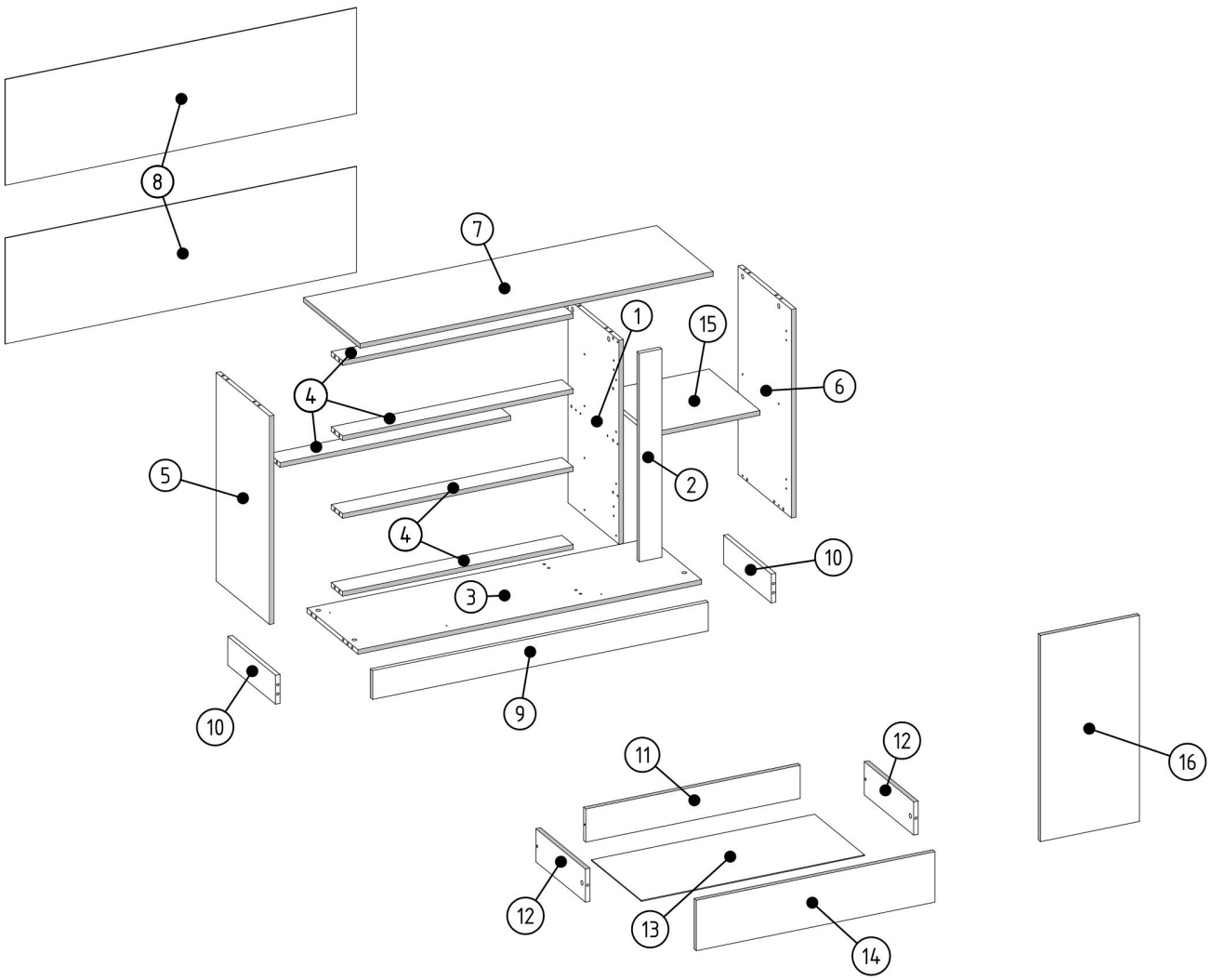

001804	16	1
001802	15	1
001794	14	4
001789	13	4
000053	12	8
001788	11	4
001795	10	2
001806	9	1
001803	8	2
001799	7	1
001807	6	1
001798	5	1
001792	4	5
001800	3	1
001805	2	1
001801	1	1
ID	NUMBER	QUANTITY

N1	M1	E1	P3	R1	V16	R2	V39
L=35mm x5	12x15mm x2	8x30mm x4	L=350mm x4	6x8mm x8	5x16mm x2	6x13mm x4	x2

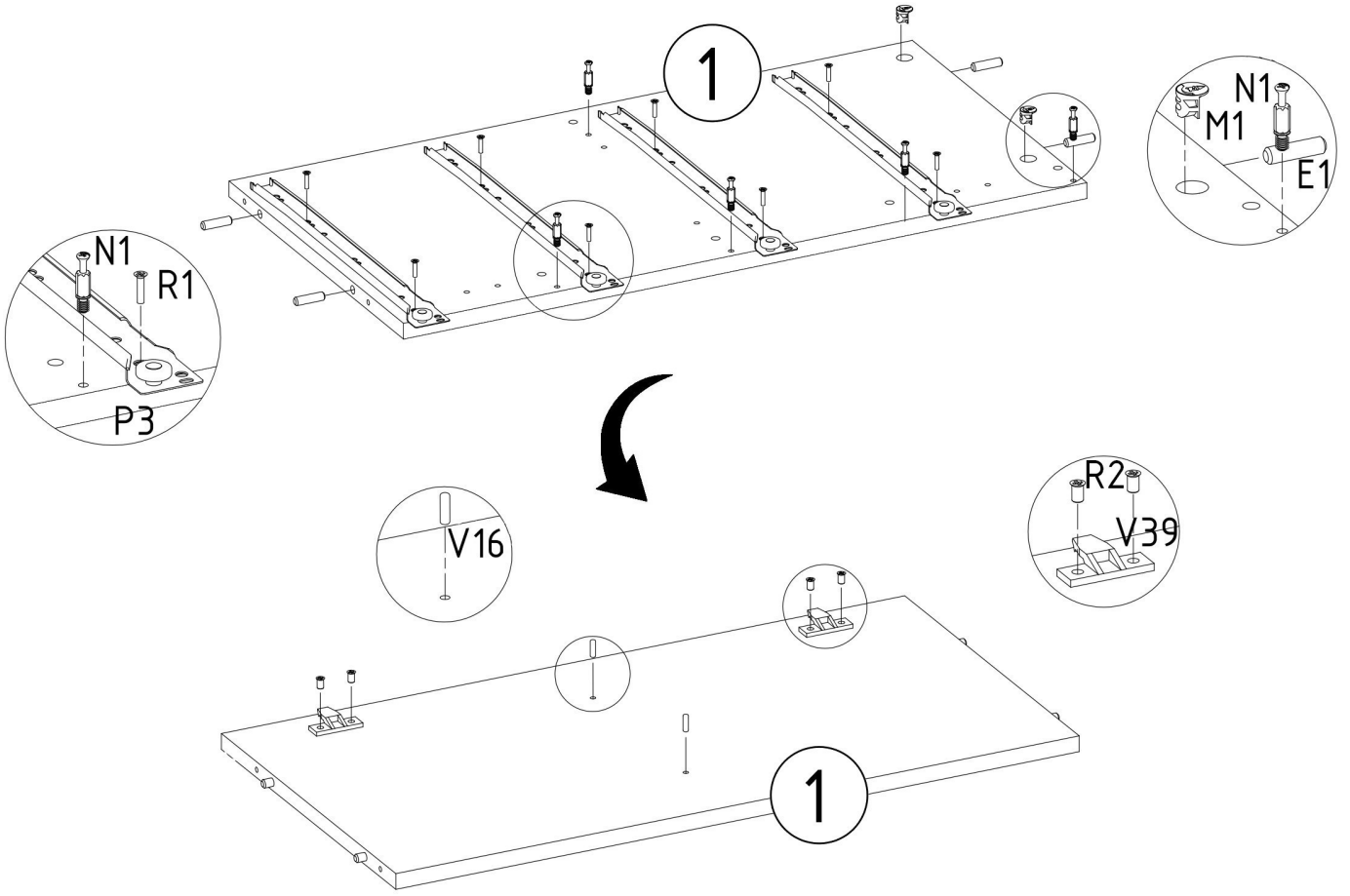

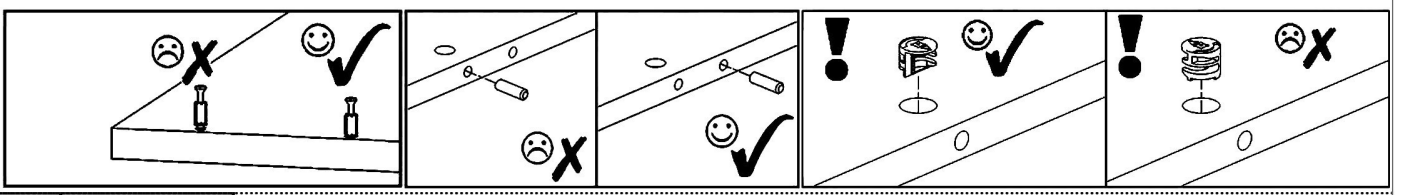

R2	V39
6x13mm x4	x2

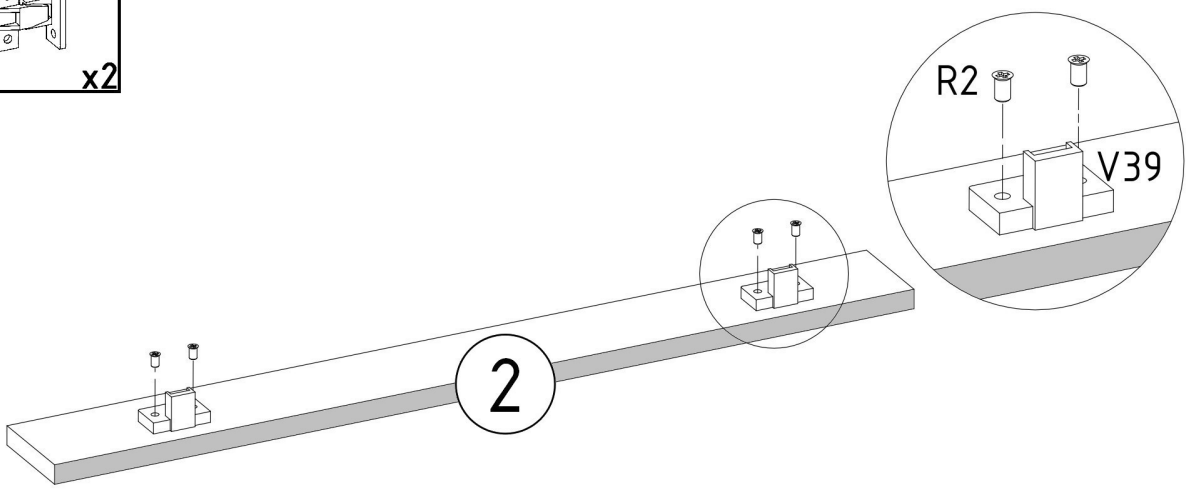

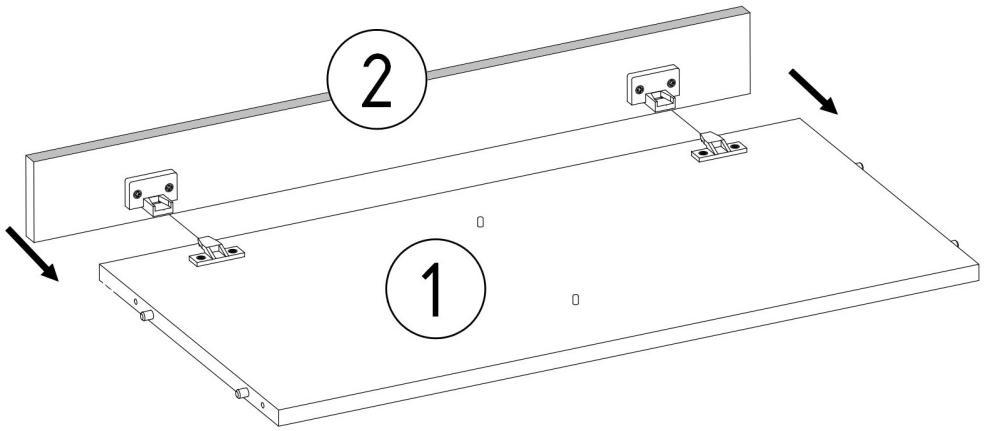
2
1

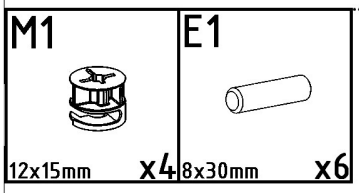
M1
12x15mm
x4
E1
8x30mm
x6

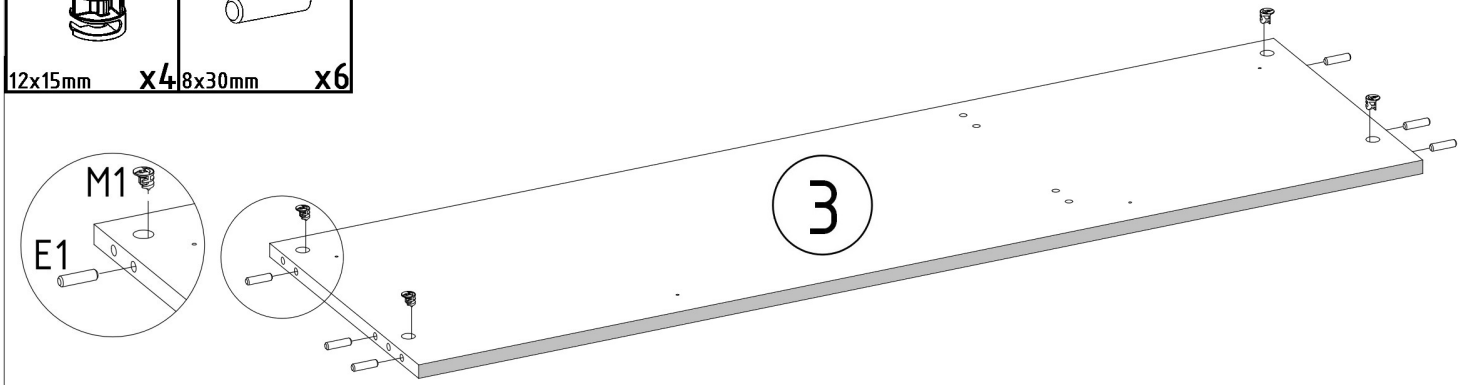
M1
E1
3

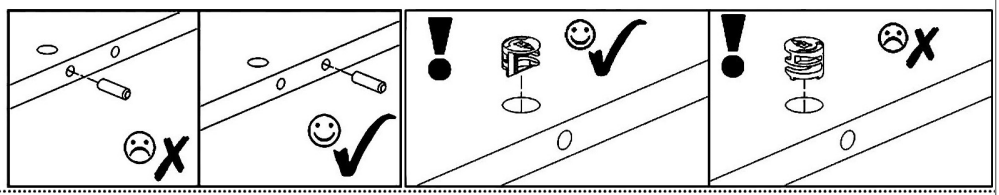

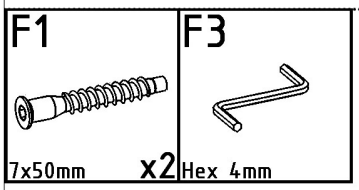
F1
7x50mm
x2
F3
Hex 4mm

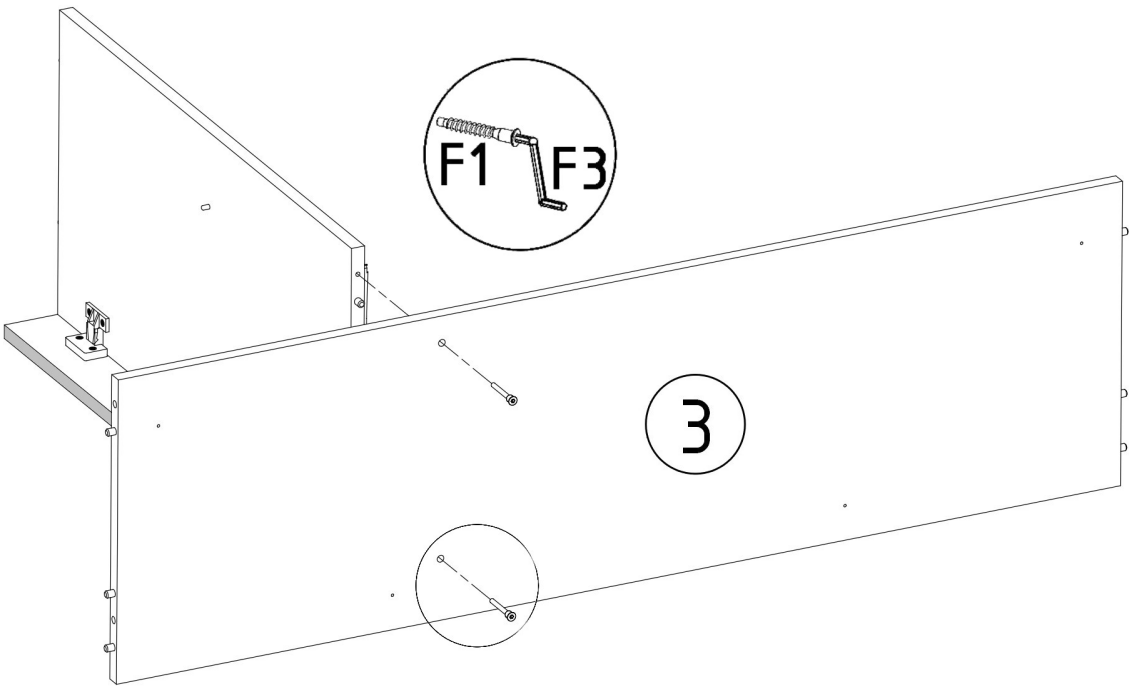
F1
F3
3

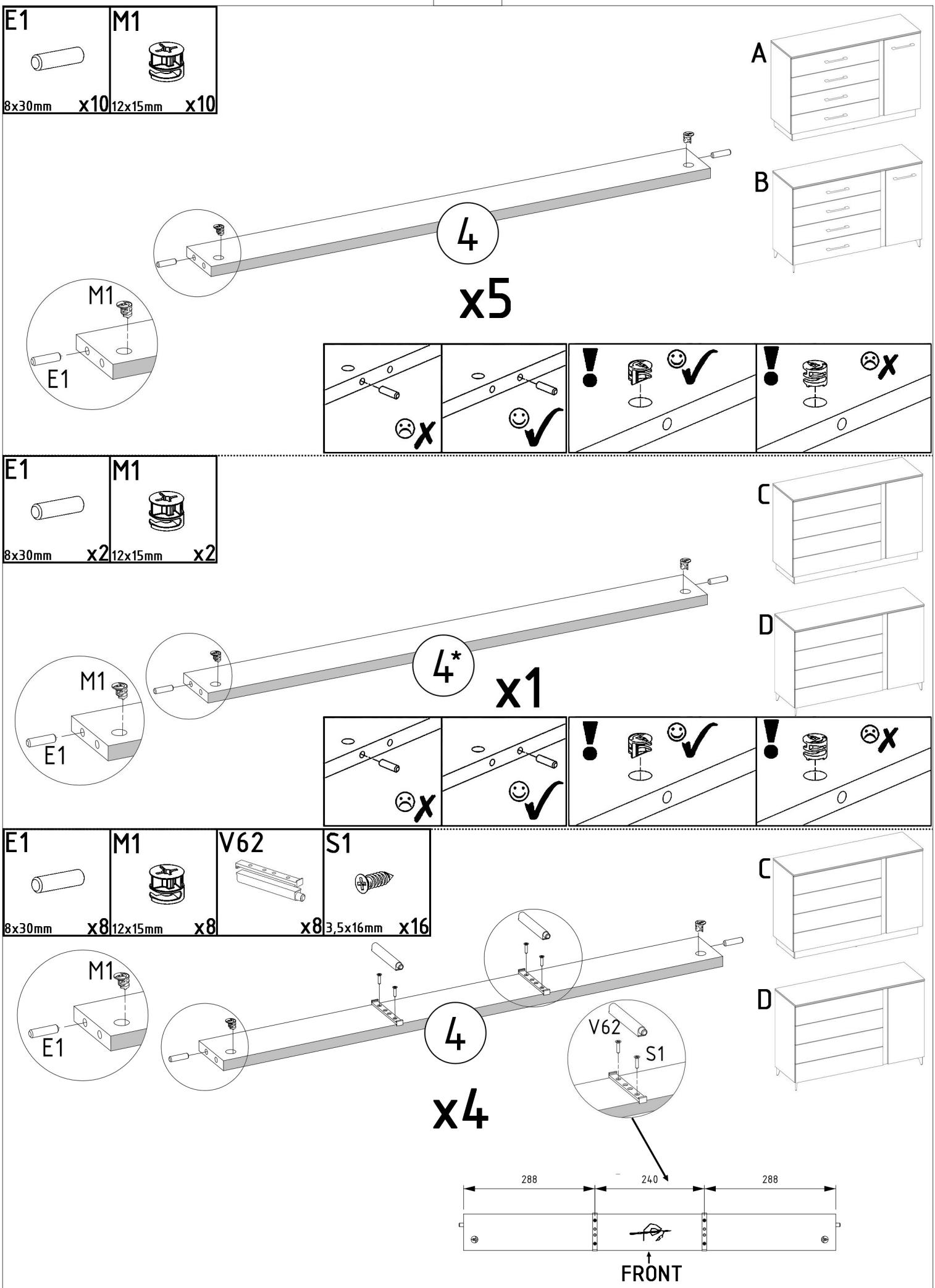
E1
8x30mm x10
M1
12x15mm x10
A
B
4
x5
M1
E1
E1
8x30mm x2
M1
12x15mm x2
C
D
4*
x1
M1
E1
E1
8x30mm x8
M1
12x15mm x8
V62
x8
S1
3,5x16mm x16
C
D
M1
E1
4
x4
V62
S1
288
240
288
FRONT

E1	M1	N1	R1	P3
				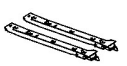
8x30mm x2	12x15mm x2	L=35mm x7	6x8mm x8	L=350mm x4

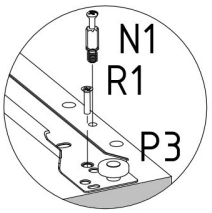

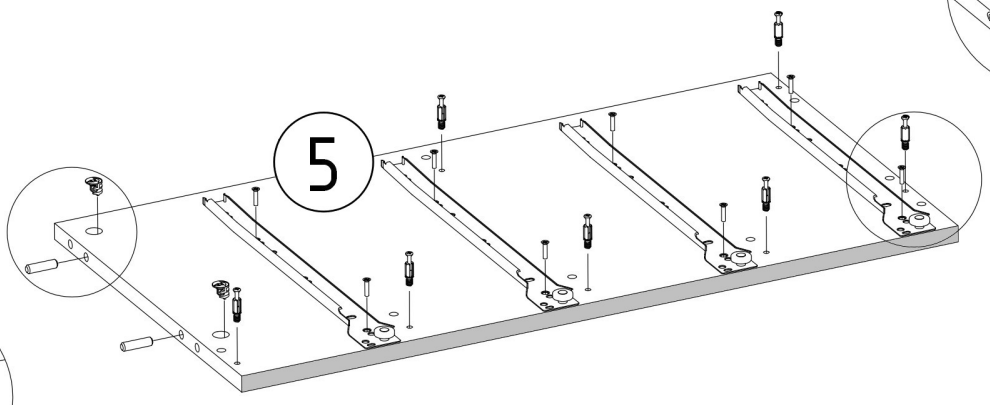

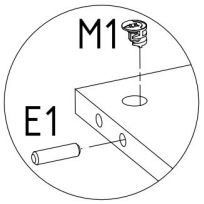

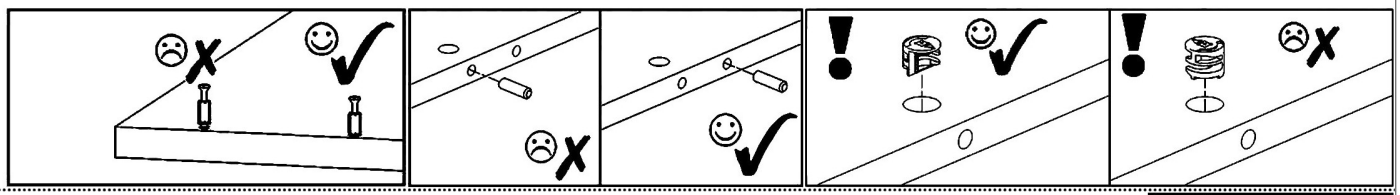

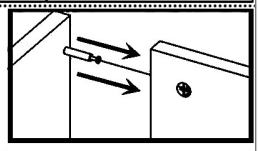

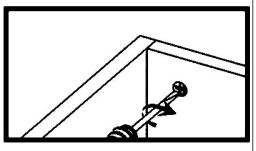

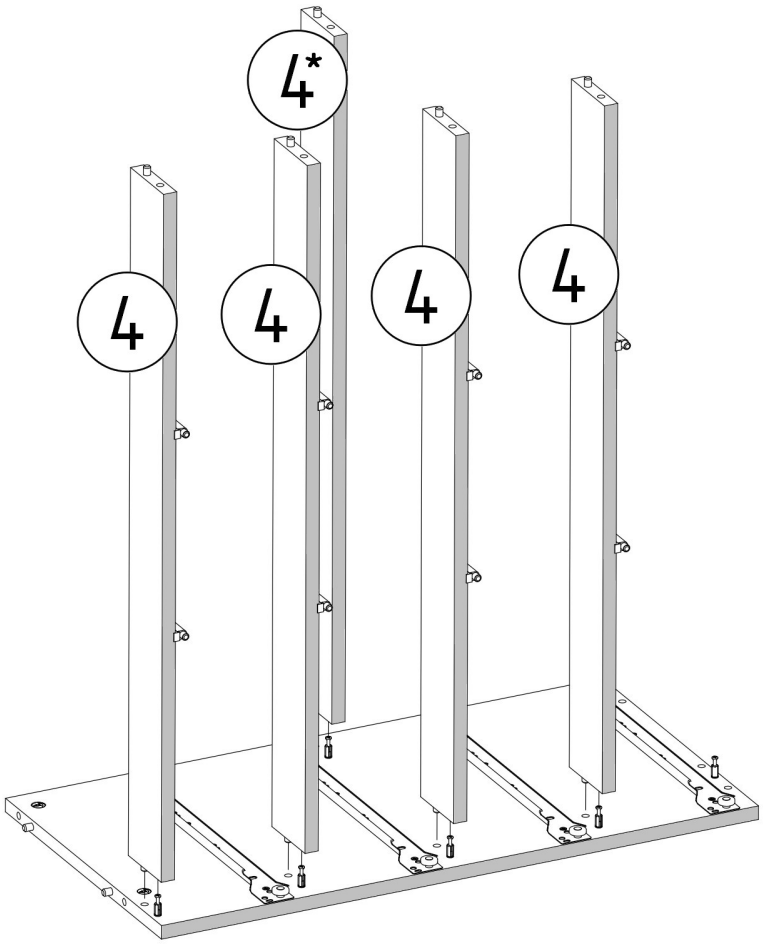

E1	M1	N1	V16	P3
8x30mm x2	12x15mm x2	L=35mm x2	5x16mm x2	L=350mm x4

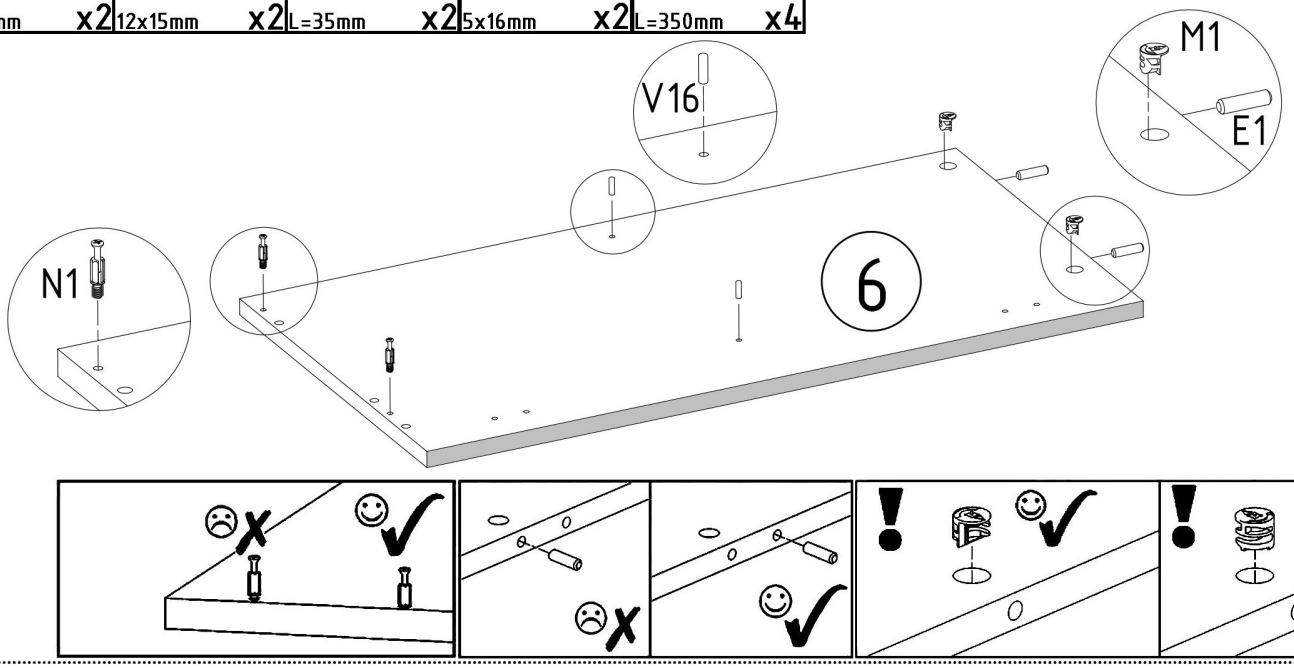

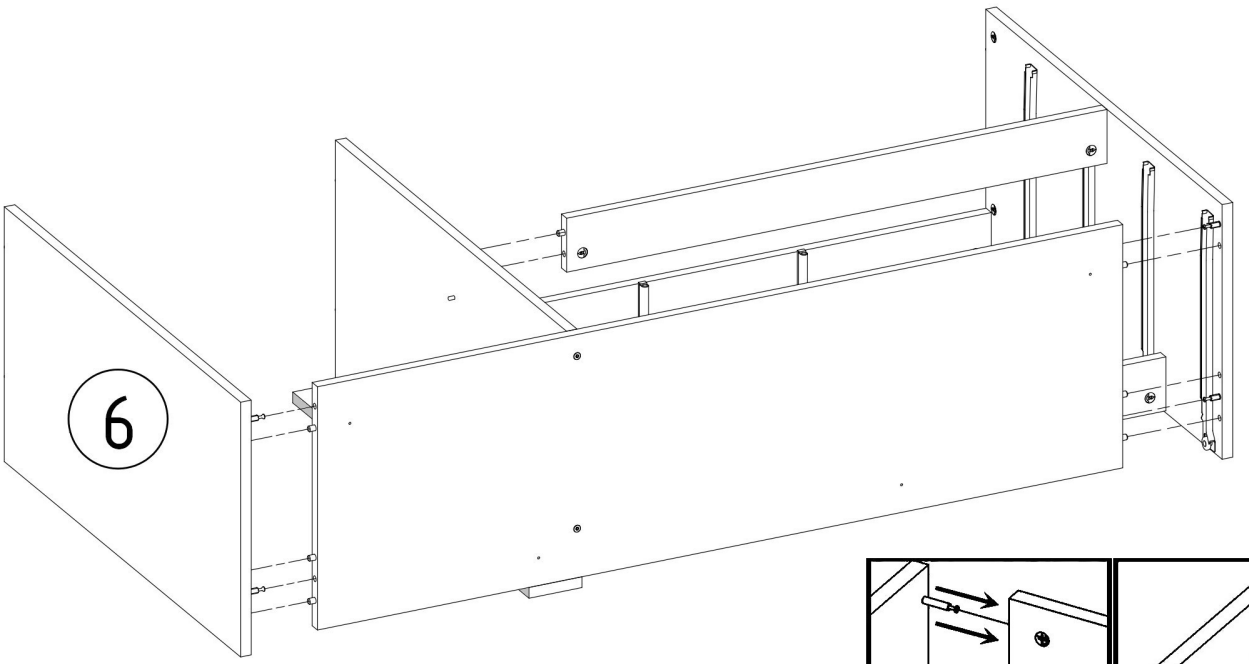

V7	R1	N1
x1	6x8mm x2	L=35mm x6

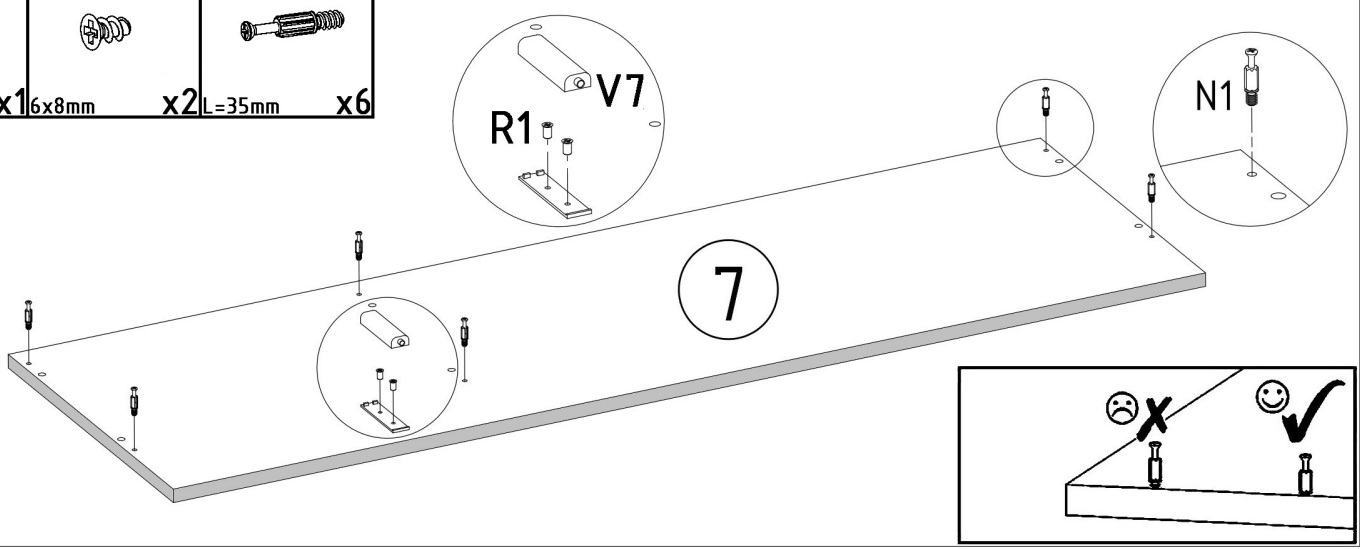

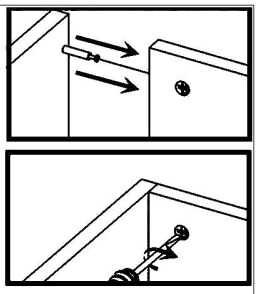

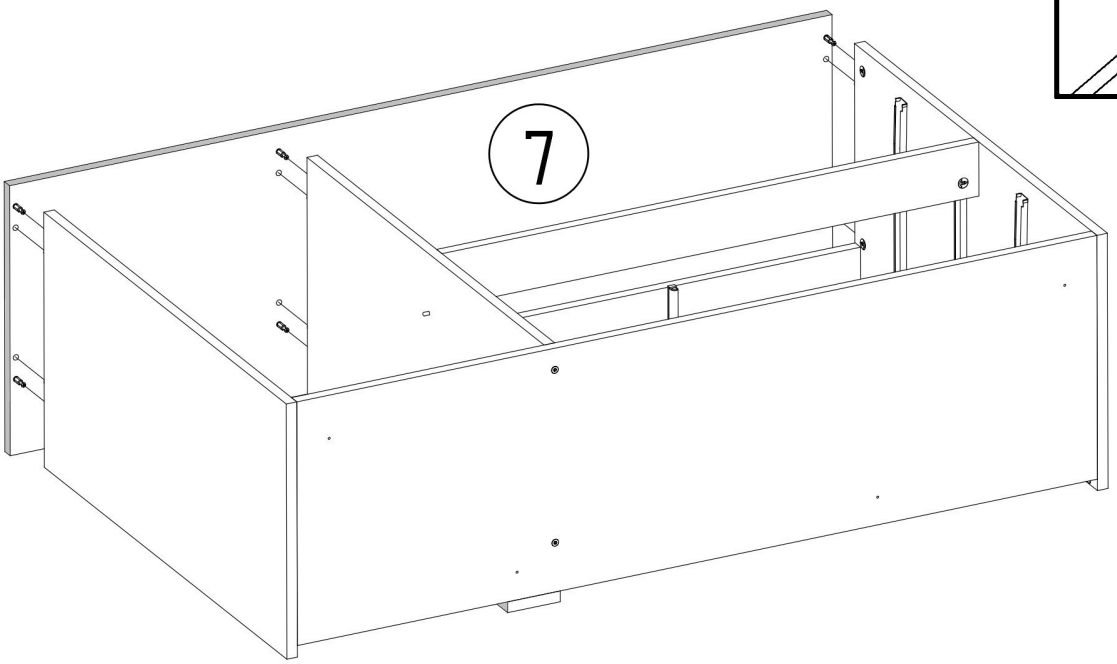
7

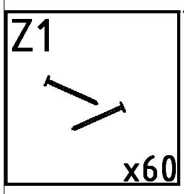
Z1
x60

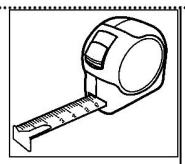

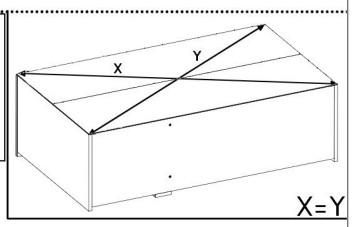
X
Y
X=Y

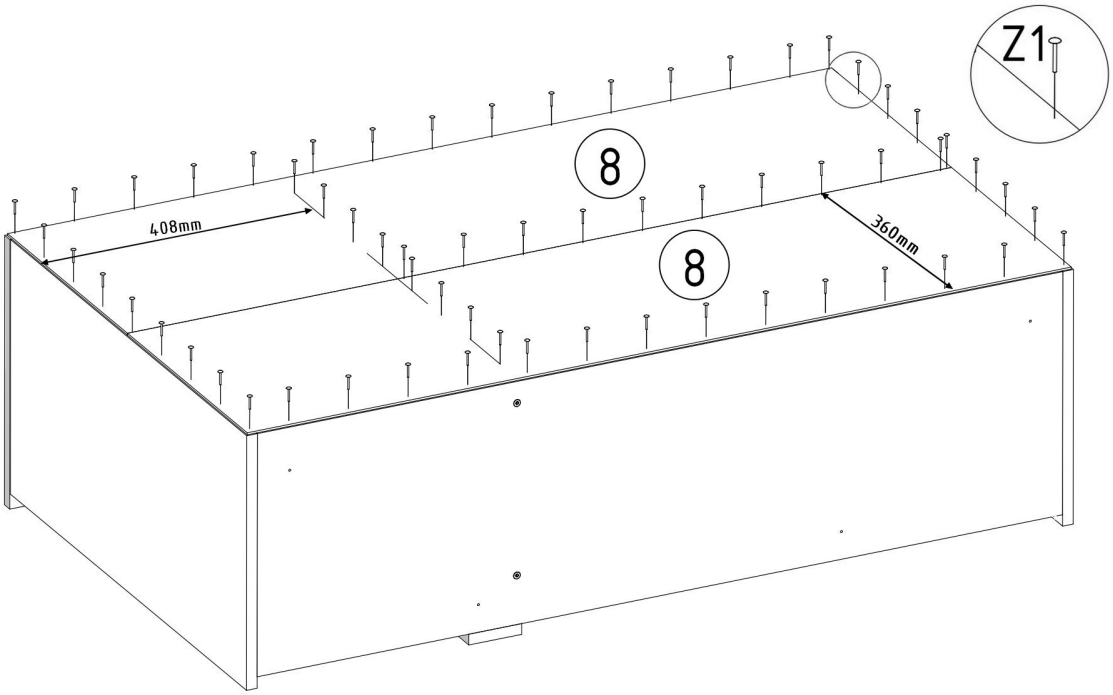
Z1
8
8
408mm
360mm

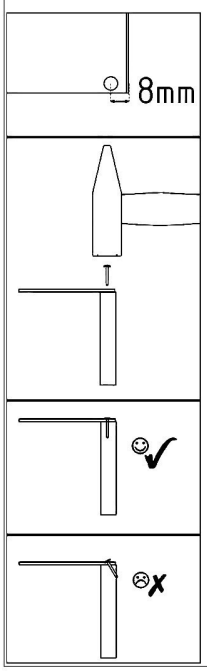
8mm

E1	T1	V12
 8x30mm x4	 x5	



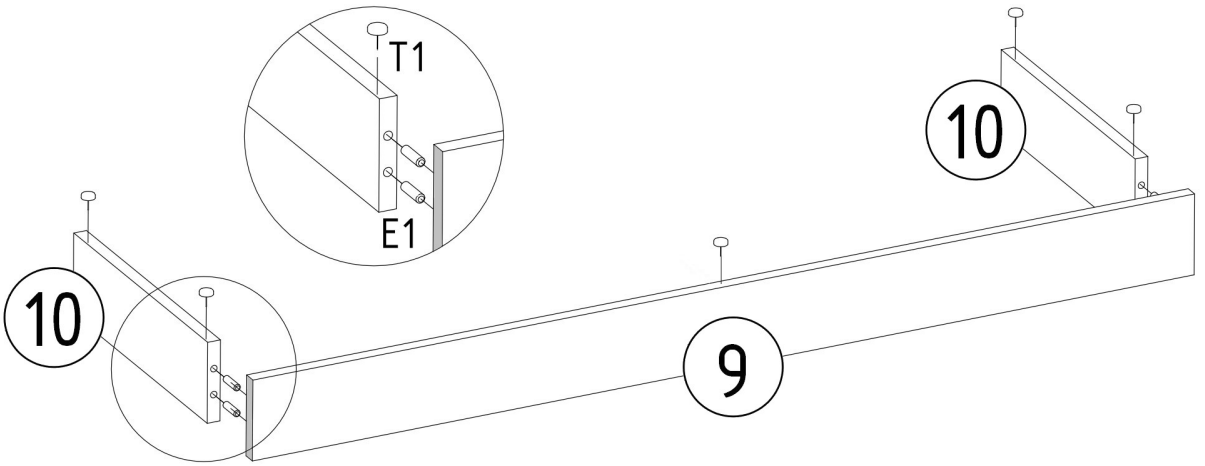

V25	S1	T4
 x4	 3,5x16mm x12	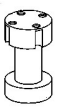 H=100mm x1

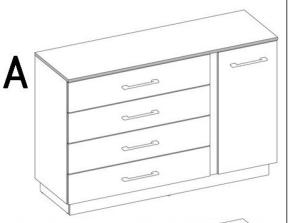

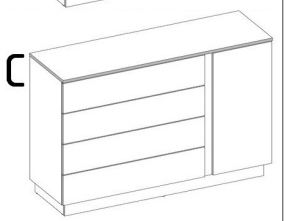

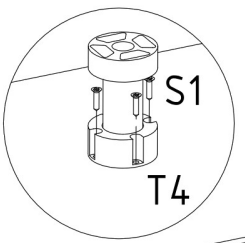

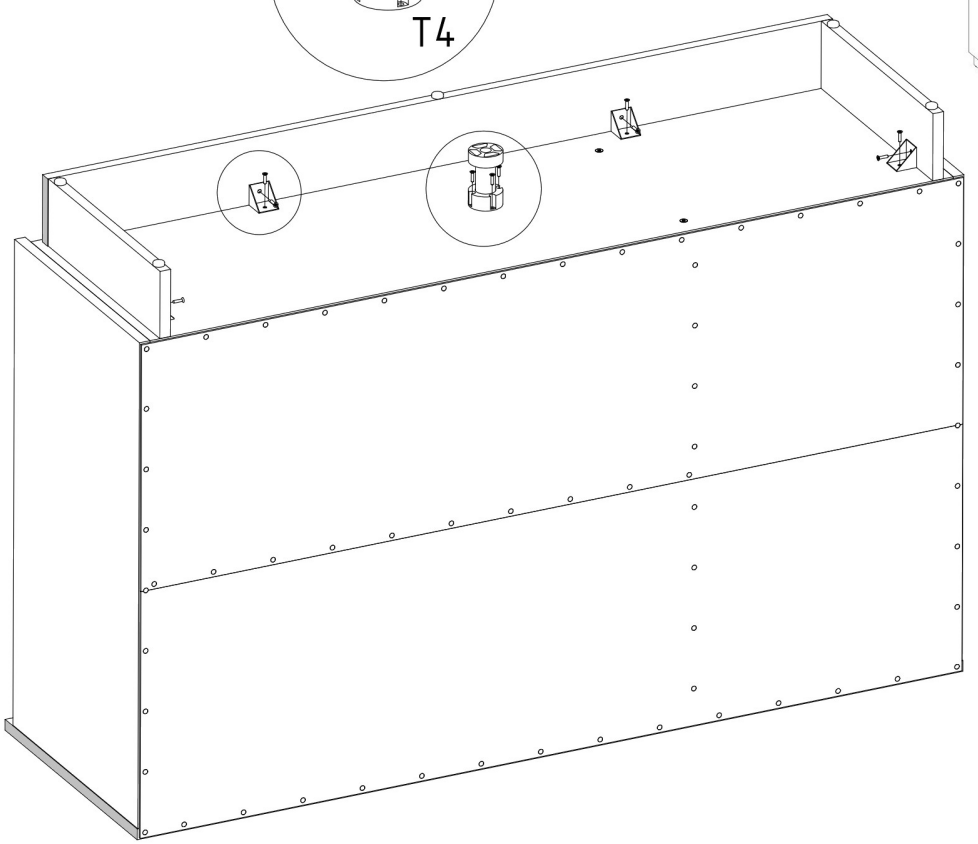

1



2

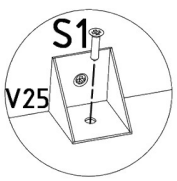

T6	S9	T4	S1
H=100mm x4	4x16mm x12	H=100mm x1	3,5x16mm x4

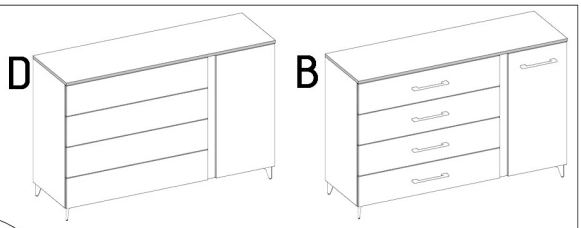

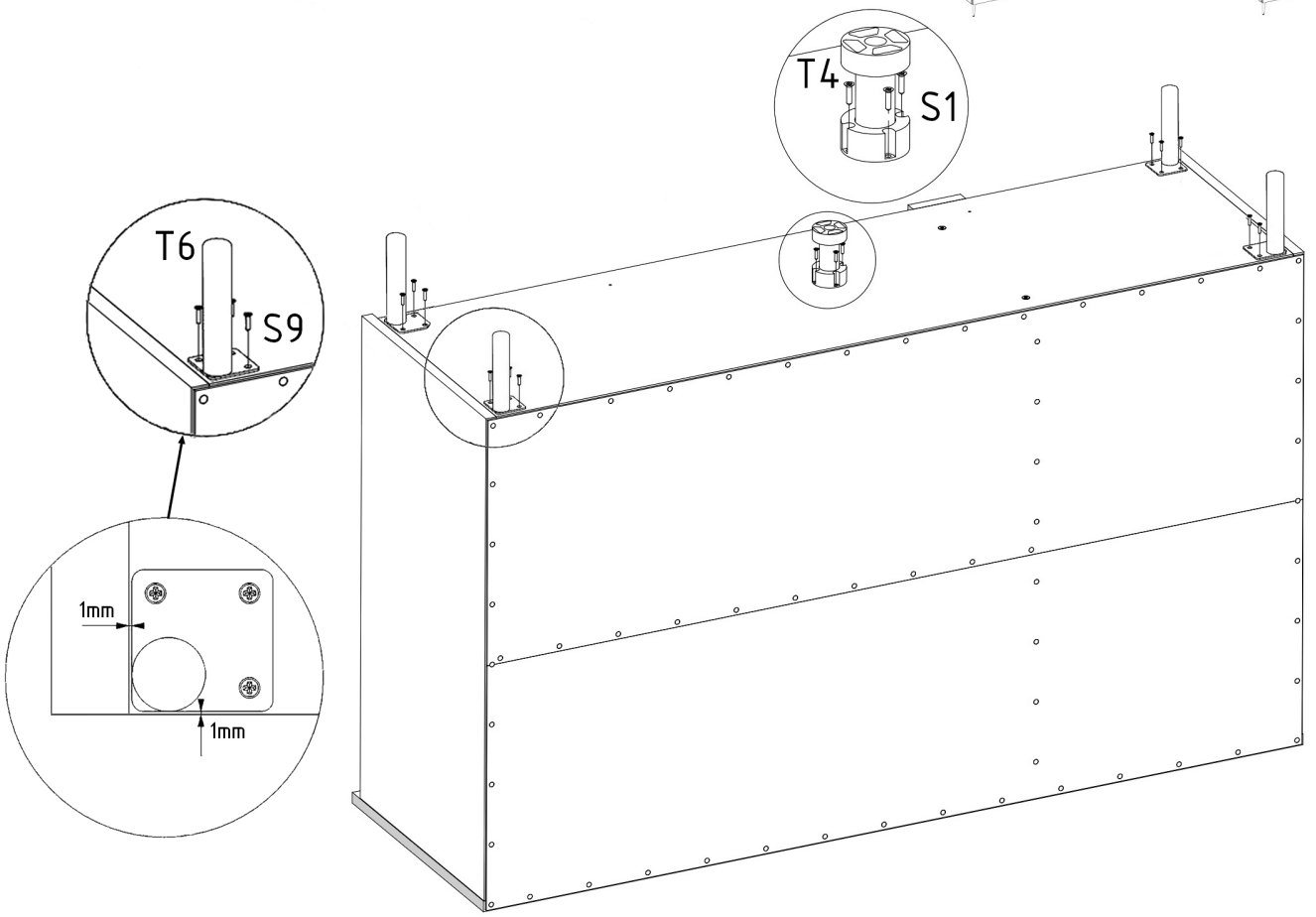

A1	S1	U6	R7
ZP x2	3,5x16mm x4	L=208/160 x1	4x27mm x2

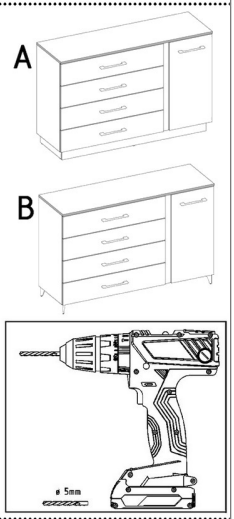

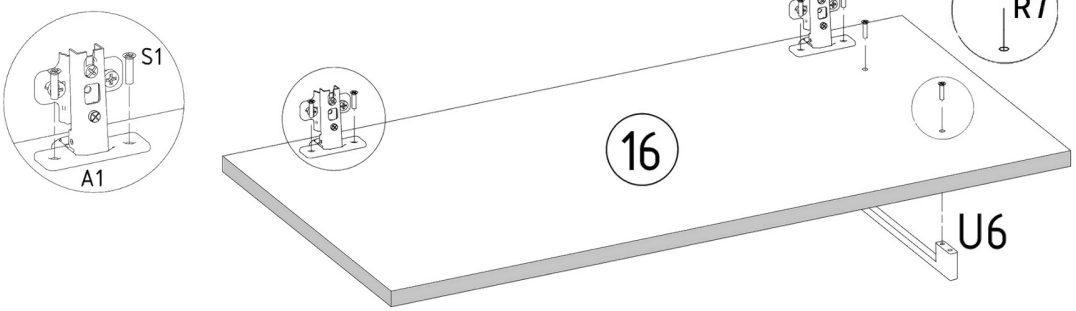

A1	S1
ZP x2	3,5x16mm x4

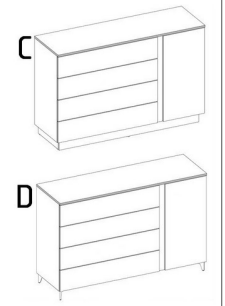

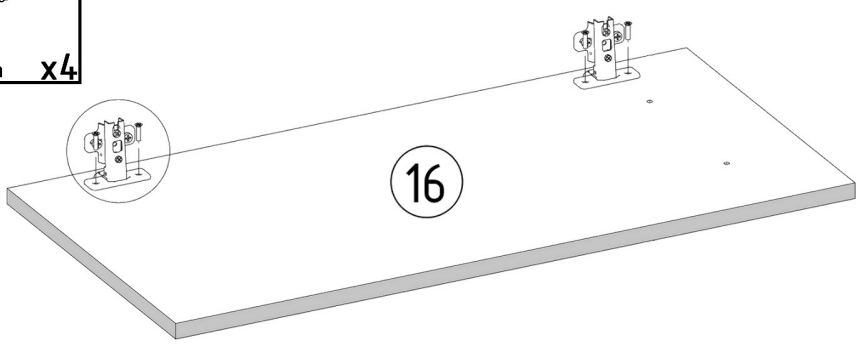

N1



L=35mm x8

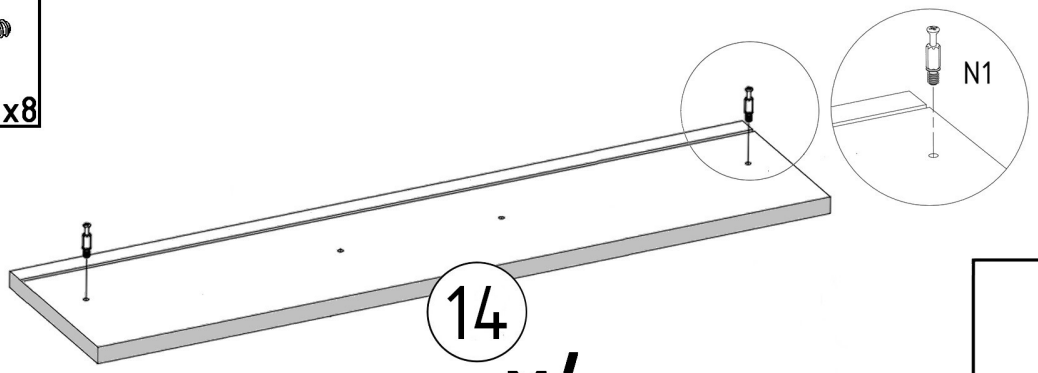

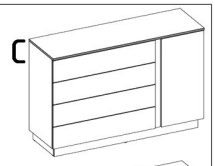

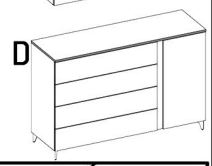

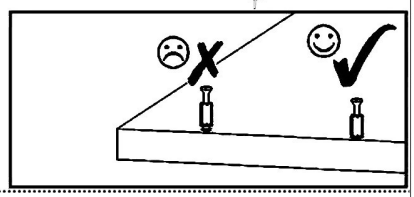

N1



L=35mm x8

R7



4x27mm x8

U6



L=208/160 x4



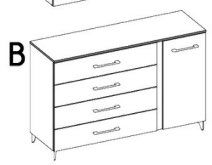

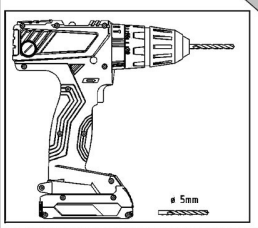

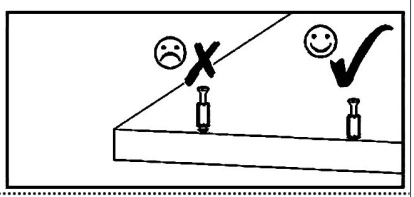

M1



12x15mm x8

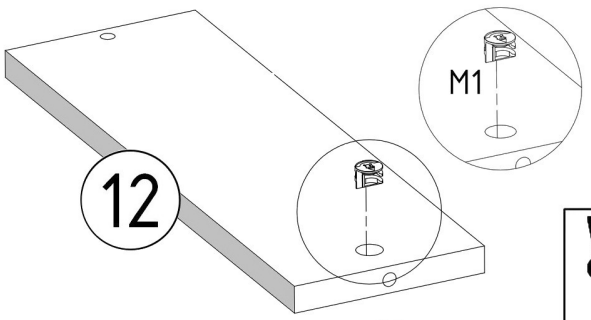

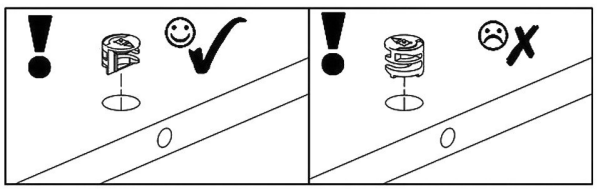

F1

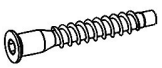

7x50mm x8

F3

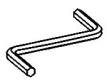

Hex 4mm

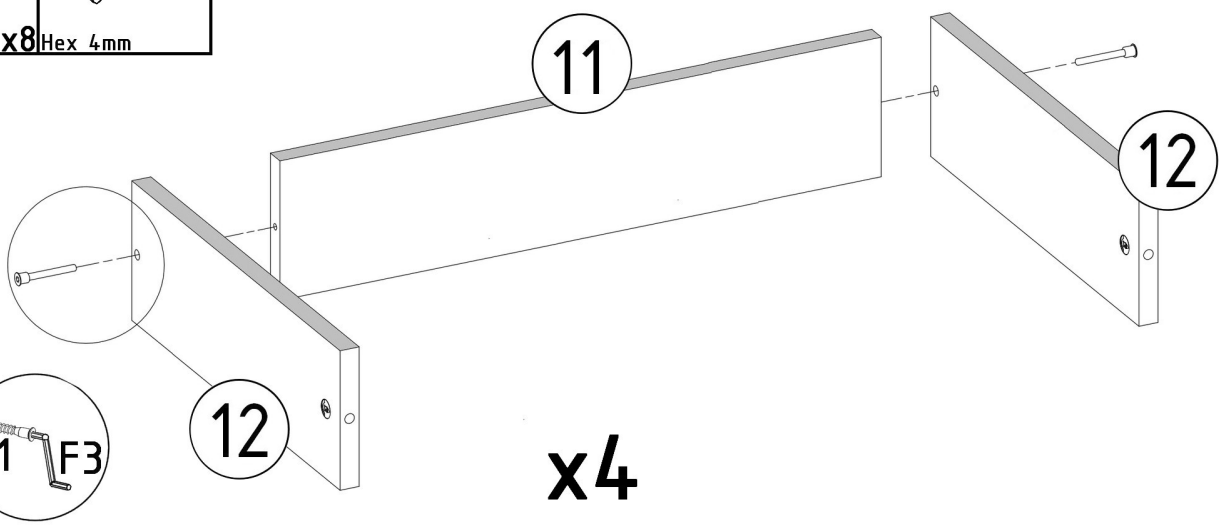

B1



ø17/4mm x8

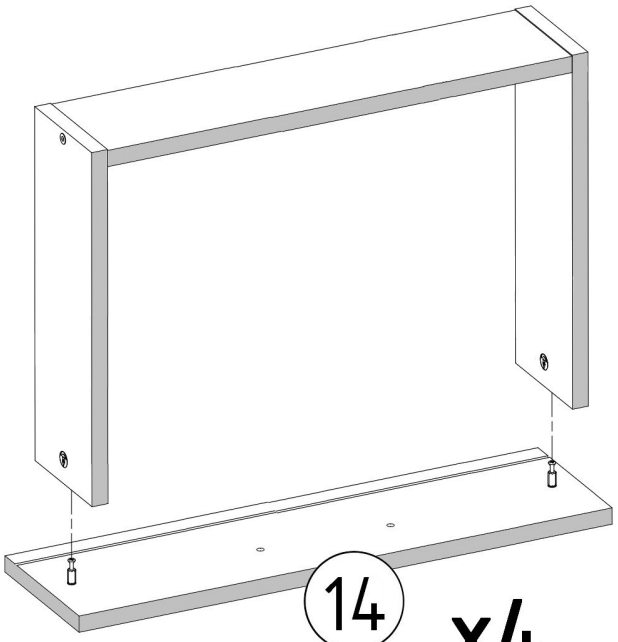

x4

1.

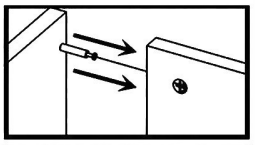

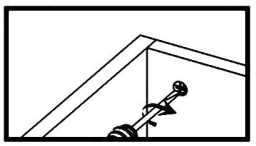

2.

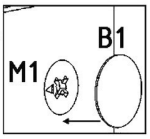

Z1



x20

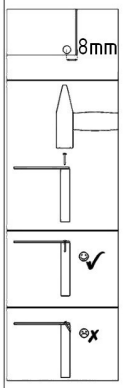

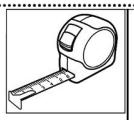

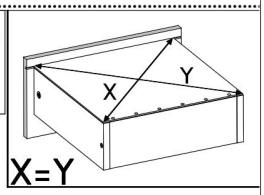

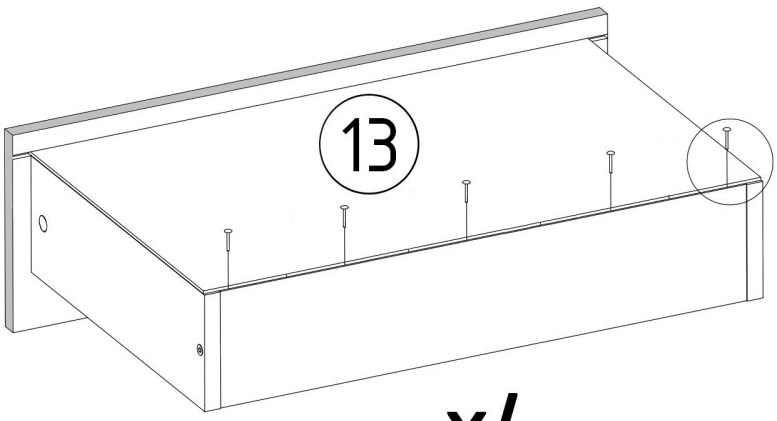

x4

S1



3,5x16mm x16

P3

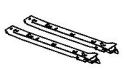

L=350mm x4

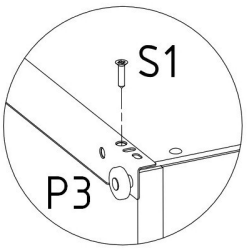

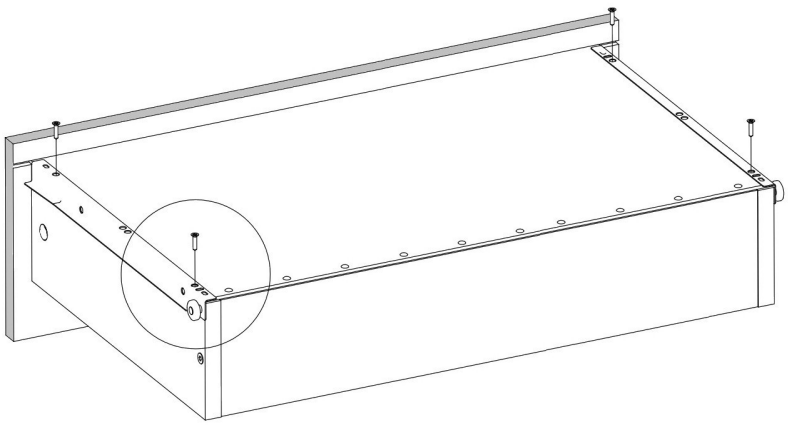

x4

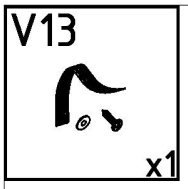

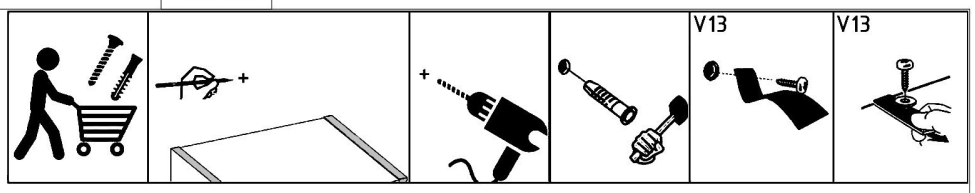

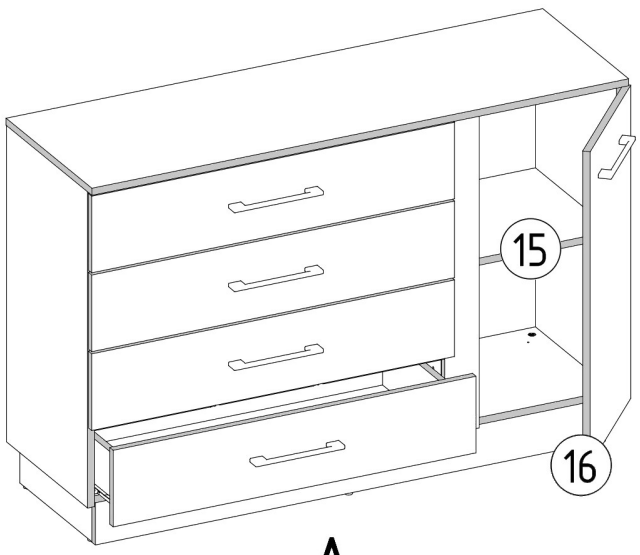

A

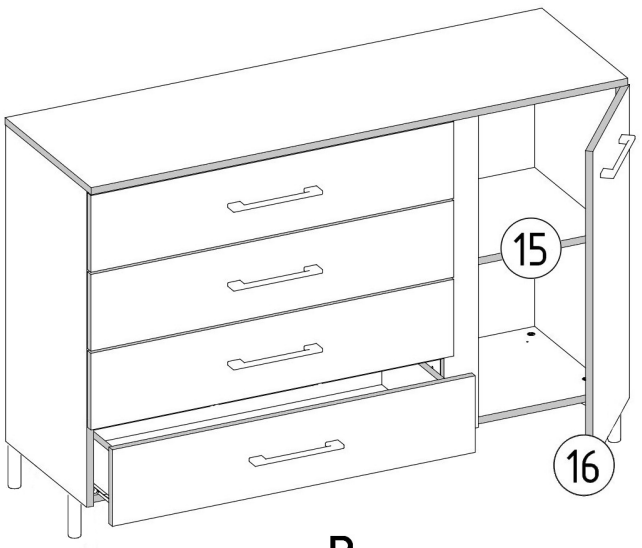

B

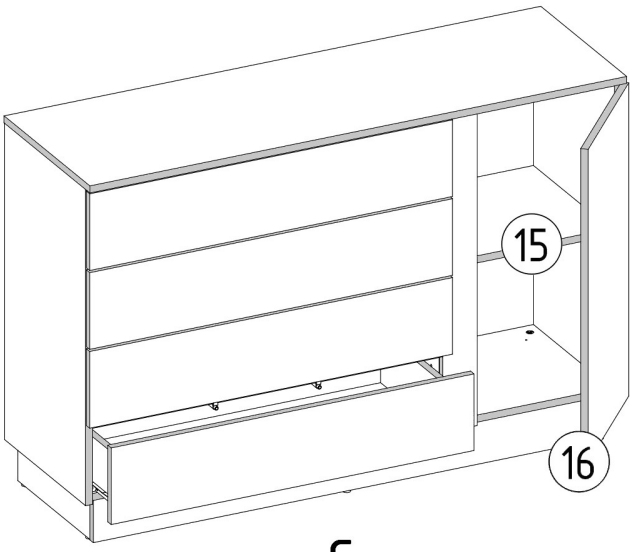

C

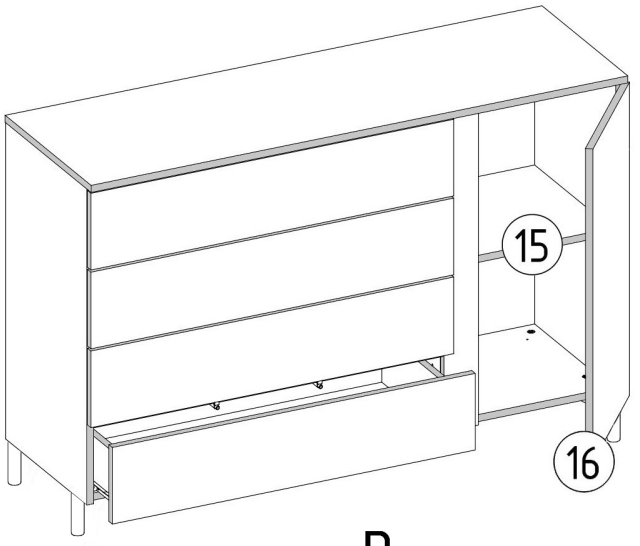

D

