INSTRUKCJA MONTAŻU

Małe biurko 81 cm z 2 szufladami, bez uchwytów

Kolor: Biały

Kod produktu: OR10373

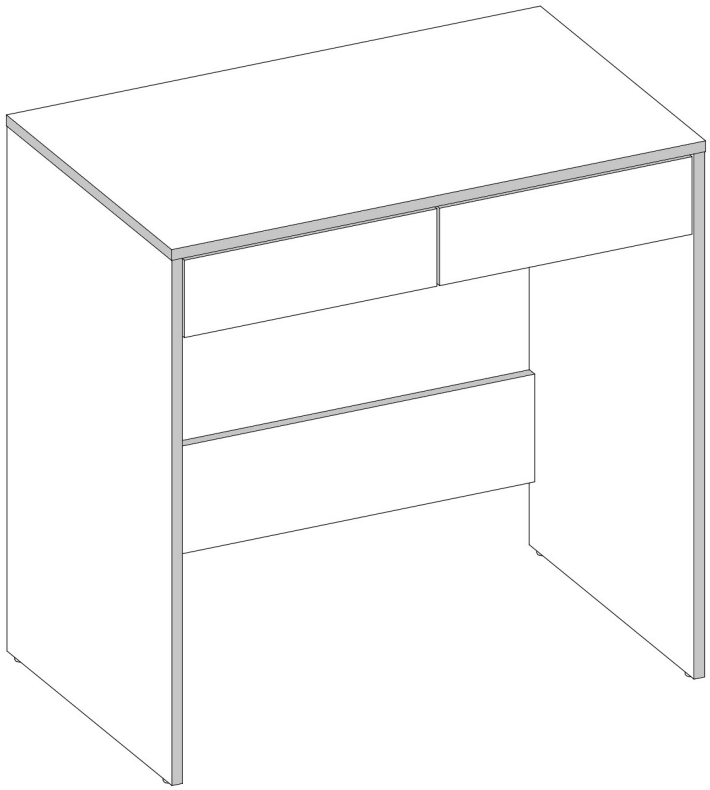

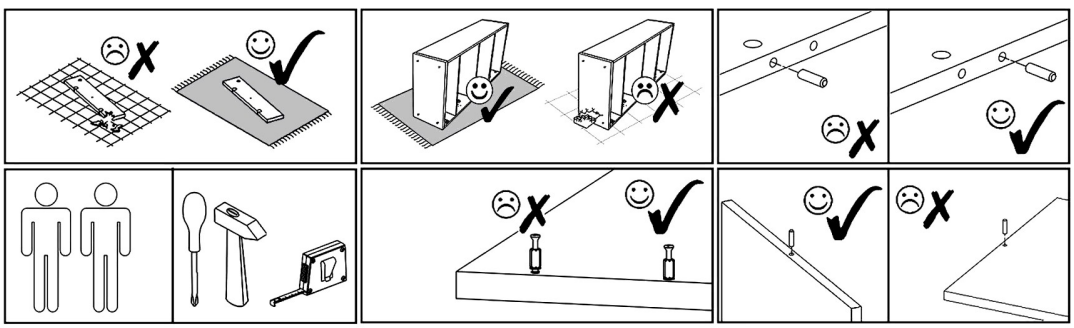

Z1 x40	S1 3,5x16mm x8	B1 B ø17/4mm x4	S8 4x35mm x2

N1 L=35mm x18	M1 12x15mm x18	E1 8x30mm x8	P3 L=350mm x2	R1 6x8mm x8	T1 x4	F1 7x50mm x4	F3 x1

IM240904

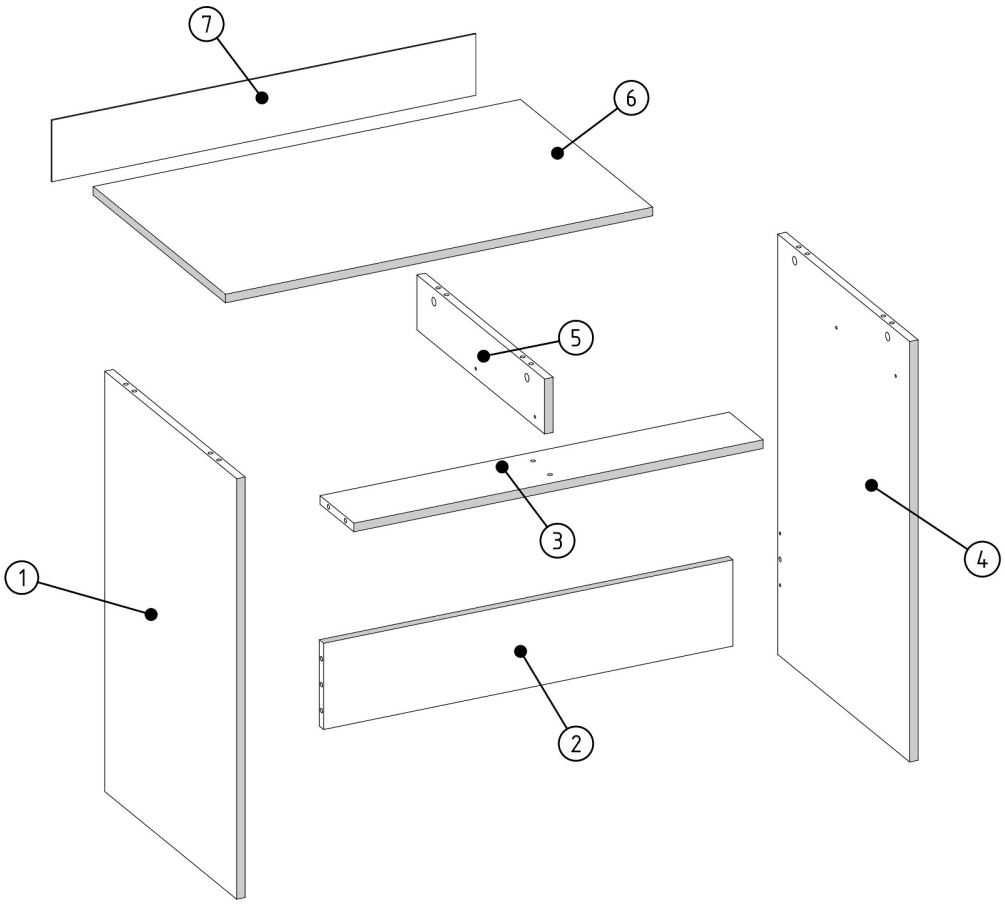

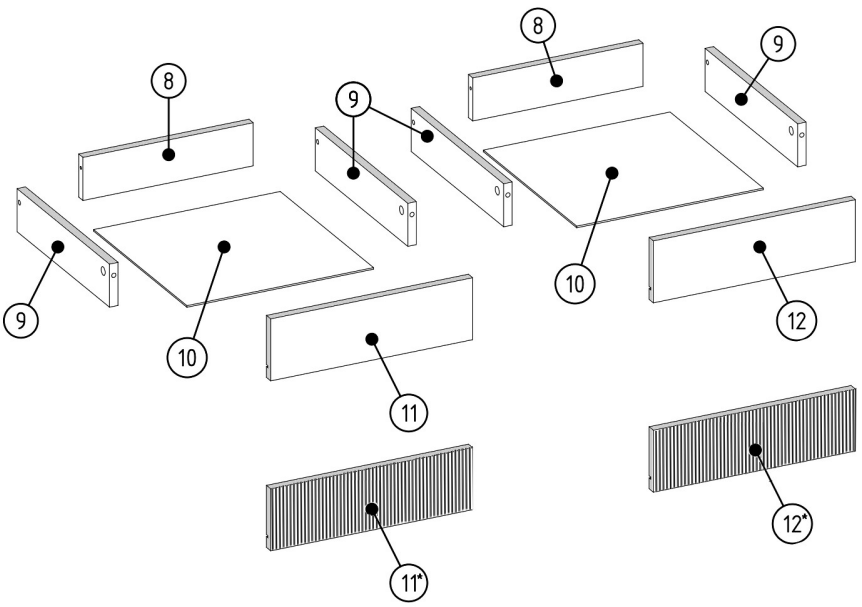

T02002	12*	1
T02003	11*	1
000406	12	1
000405	11	1
000408	10	2
000056	9	4
000412	8	2
000407	7	1
000413	6	1
000410	5	1
000404	4	1
000409	3	1
000411	2	1
000403	1	1
ID	NUMBER	QUANTITY

N1	M1	E1	P3	R1	T1
L=35mm x4	12x15mm x2	8x30mm x2	L=350mm x1	6x8mm x2	x2

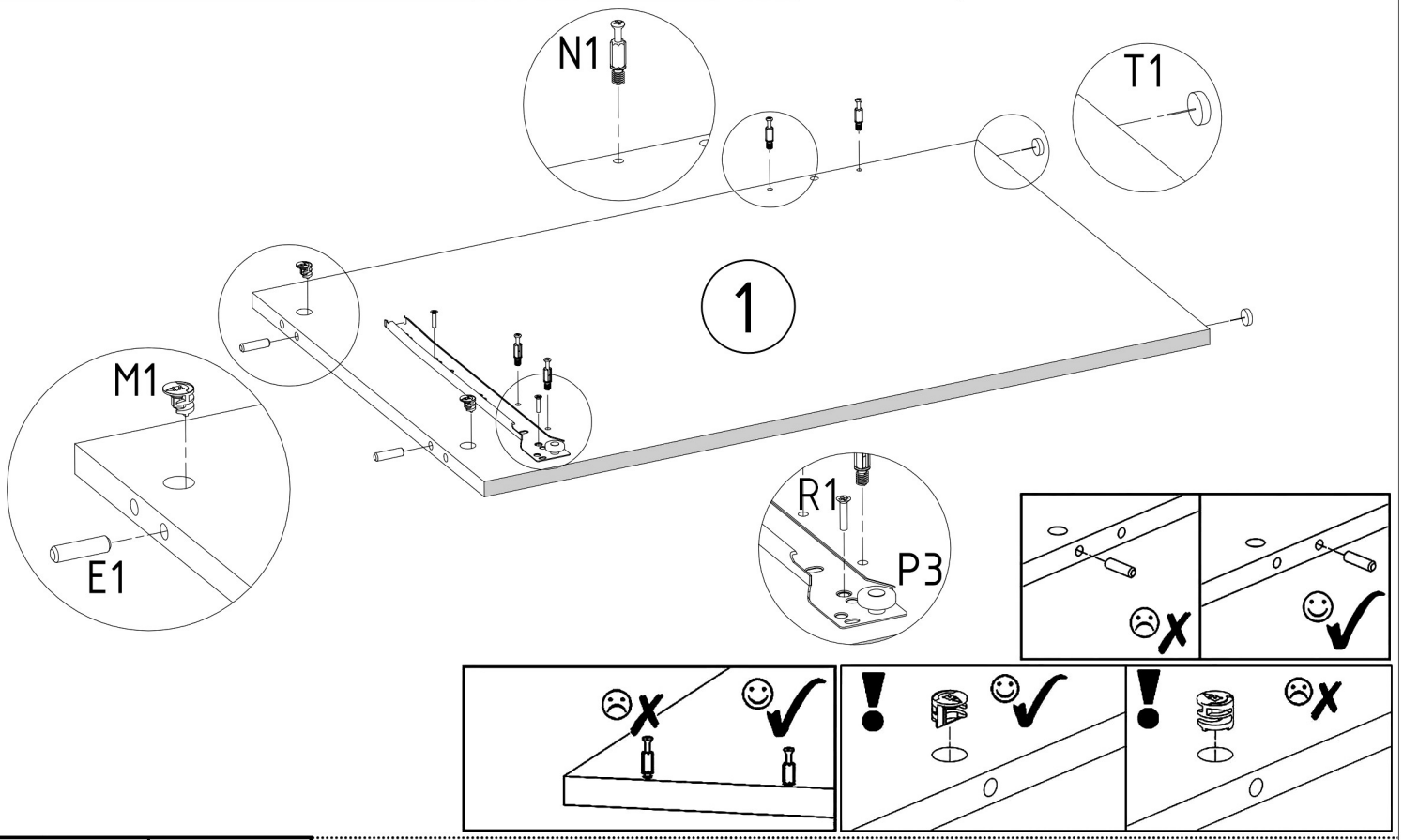

M1	E1
12x15mm x4	8x30mm x2

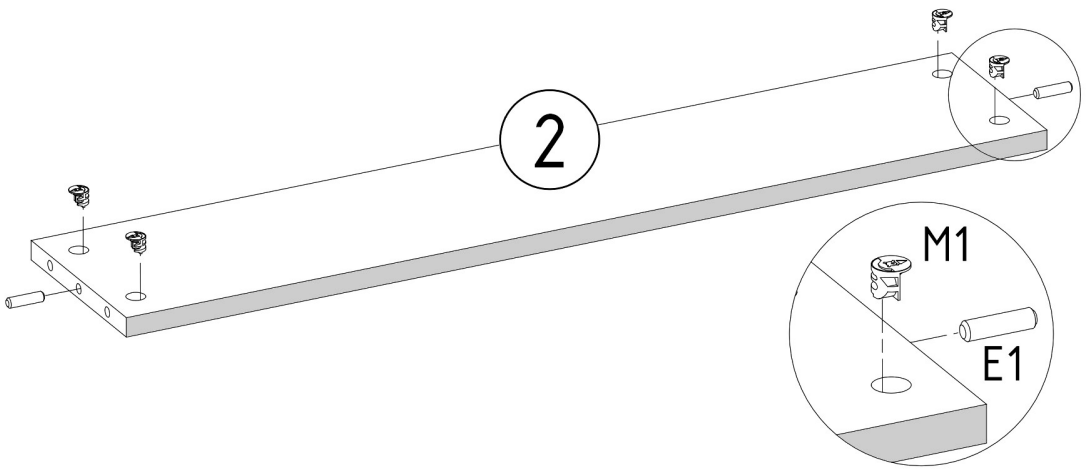

M1

12x15mm x4

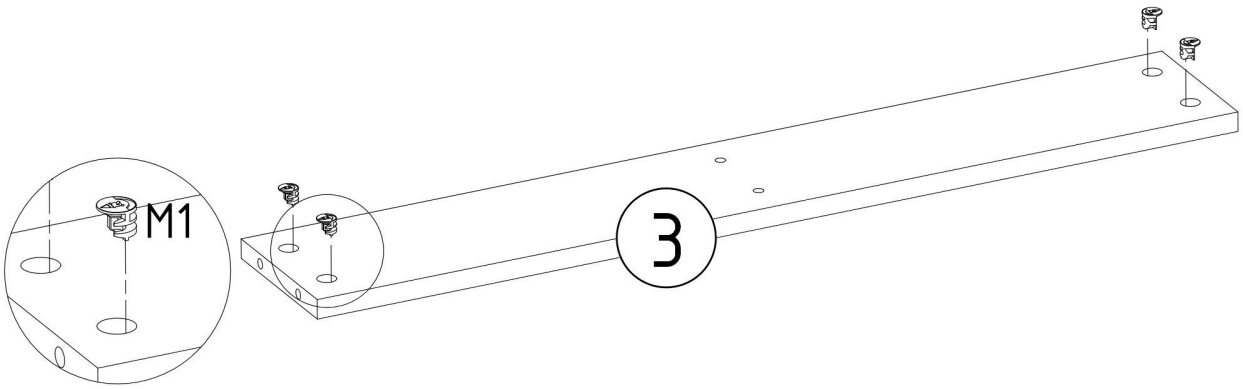

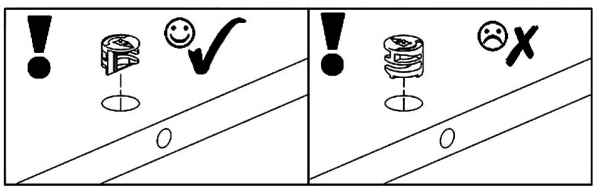

N1	M1	E1	P3	R1	T1
					
L=35mm x4	12x15mm x2	8x30mm x2	L=350mm x1	6x8mm x2	x2

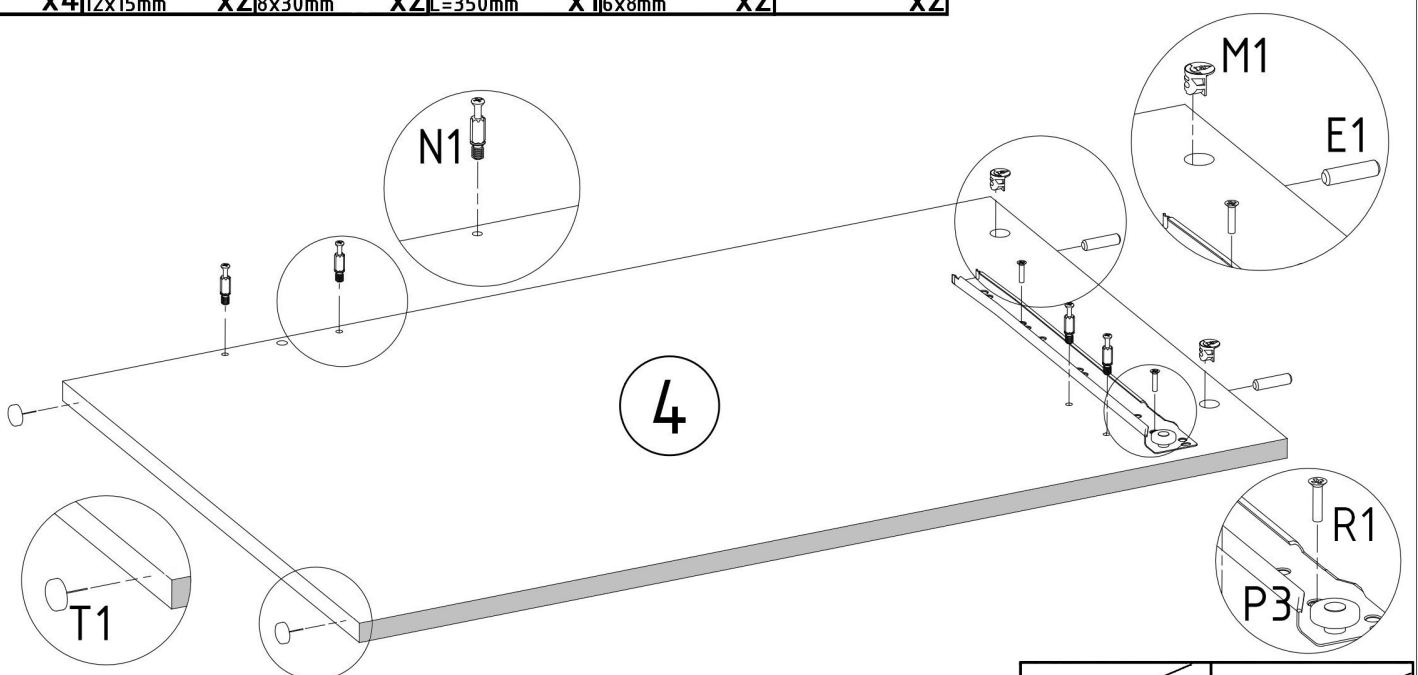

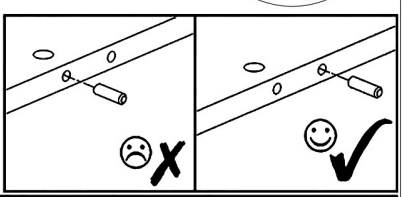

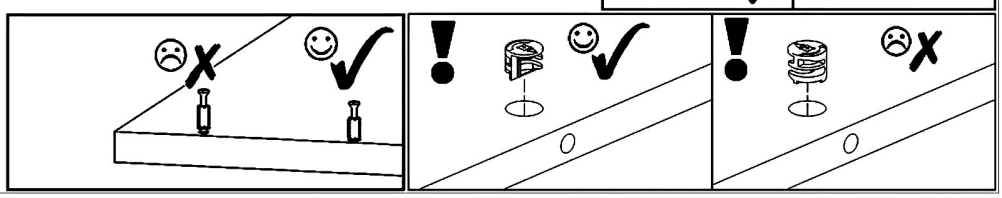

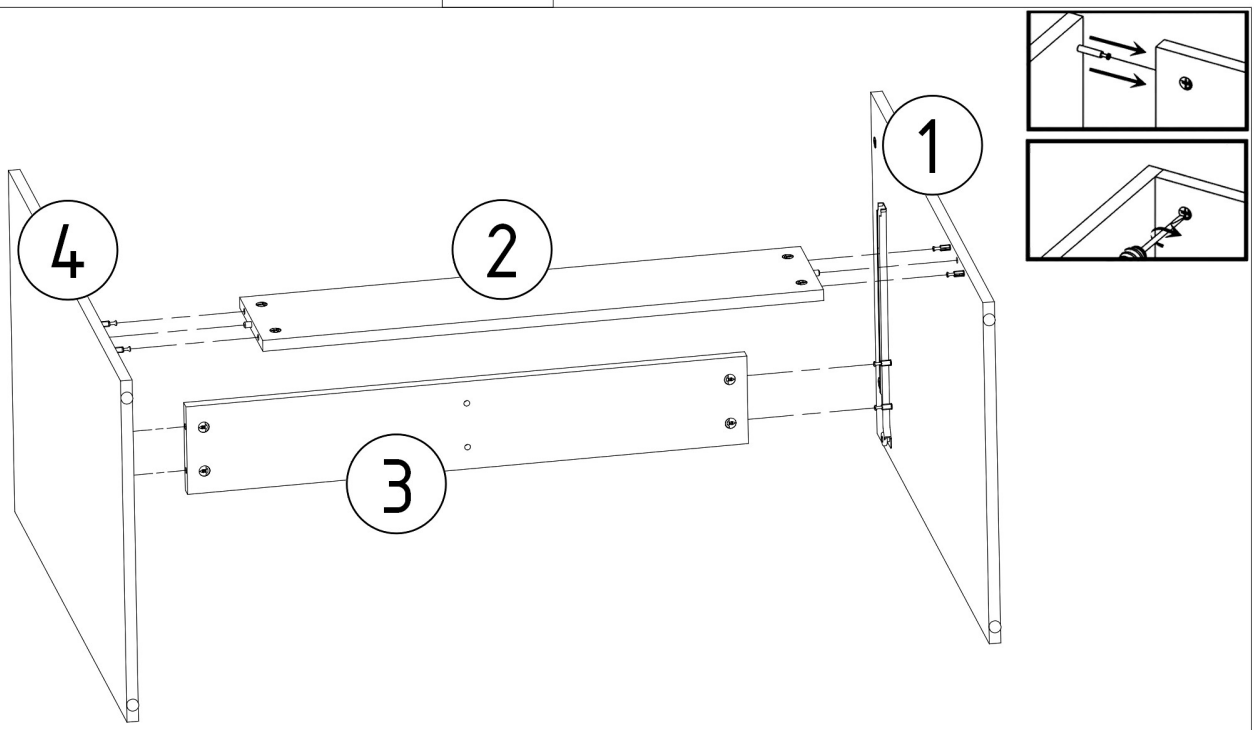

M1	E1	P3	R1
12x15mm x2	8x30mm x2	L=350mm x1	6x8mm x2

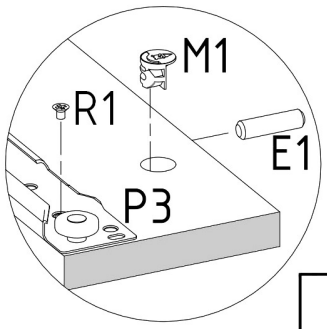

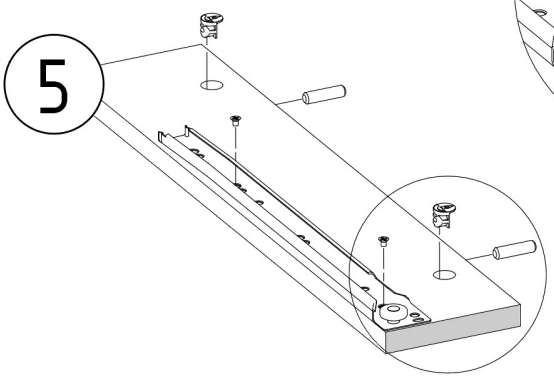

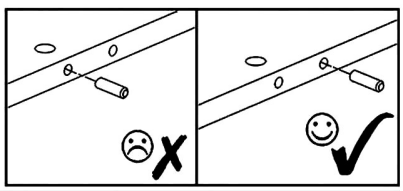

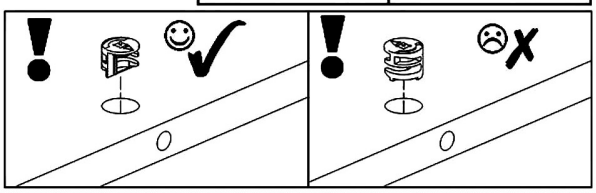

P3	R1
L=350mm x1	6x8mm x2

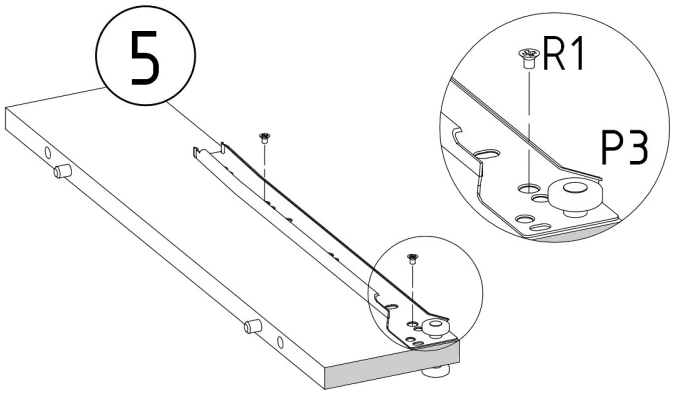

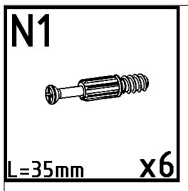
N1
L=35mm
x6

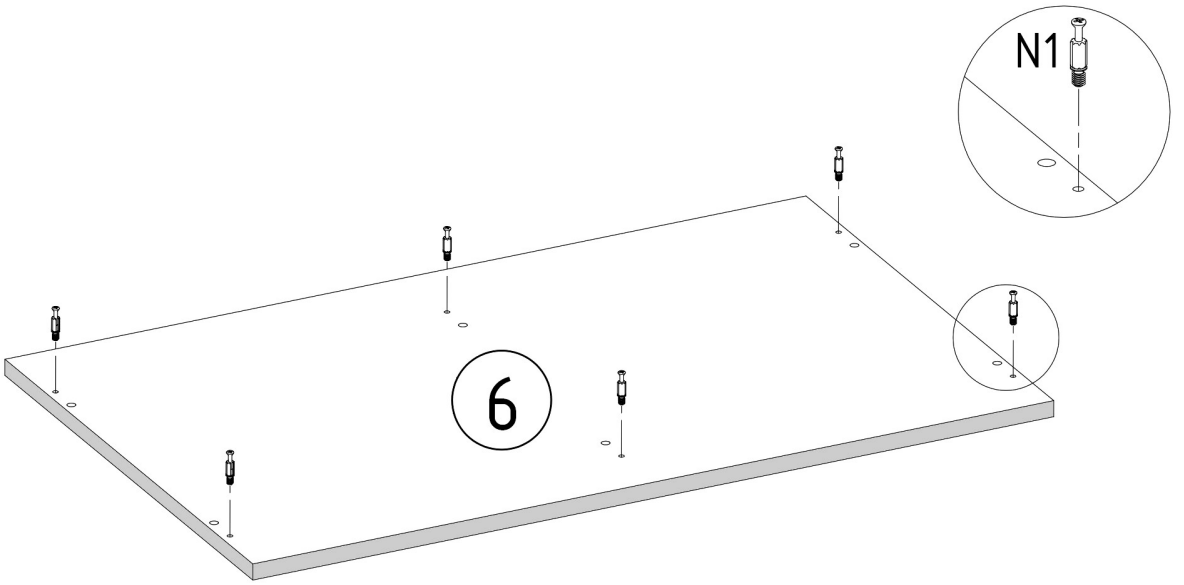
N1
6

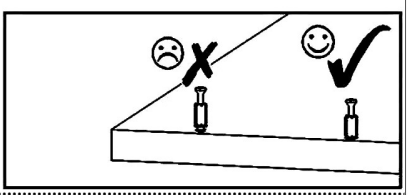

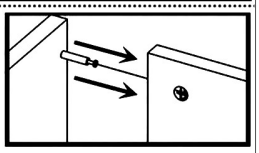

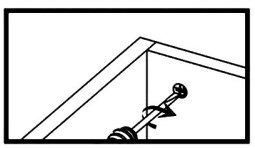

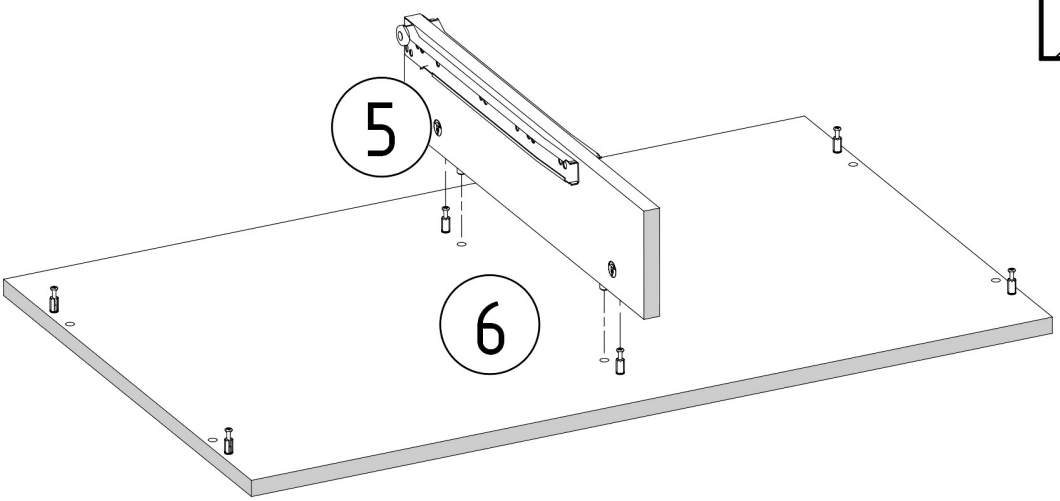
5
6

S8



4x35mm x2

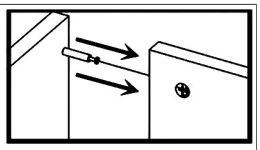

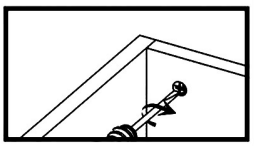

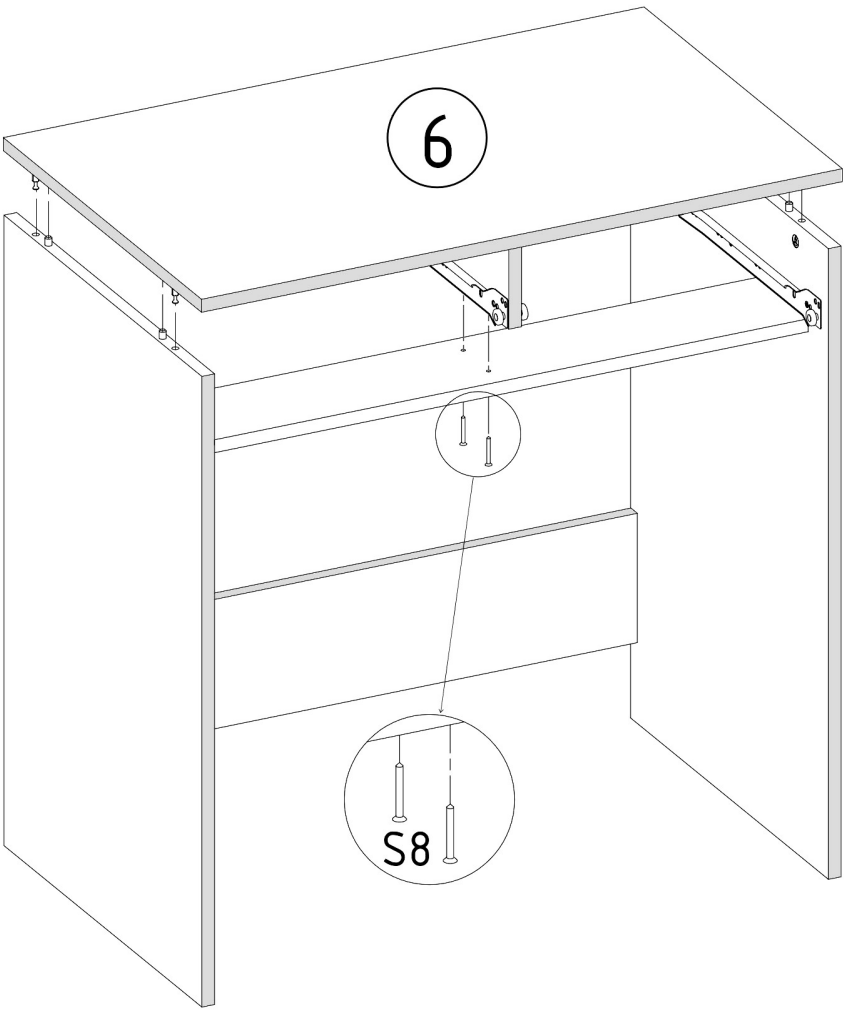

Z1



x25

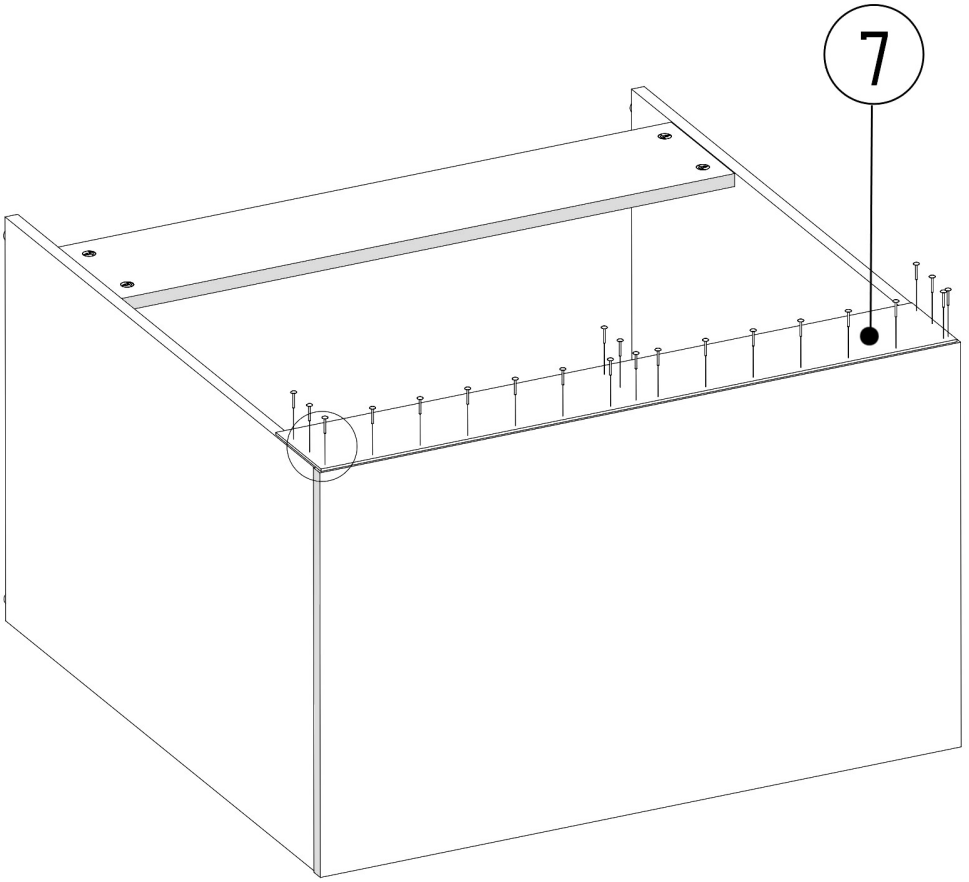

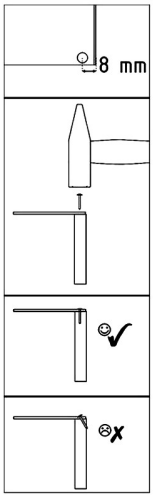

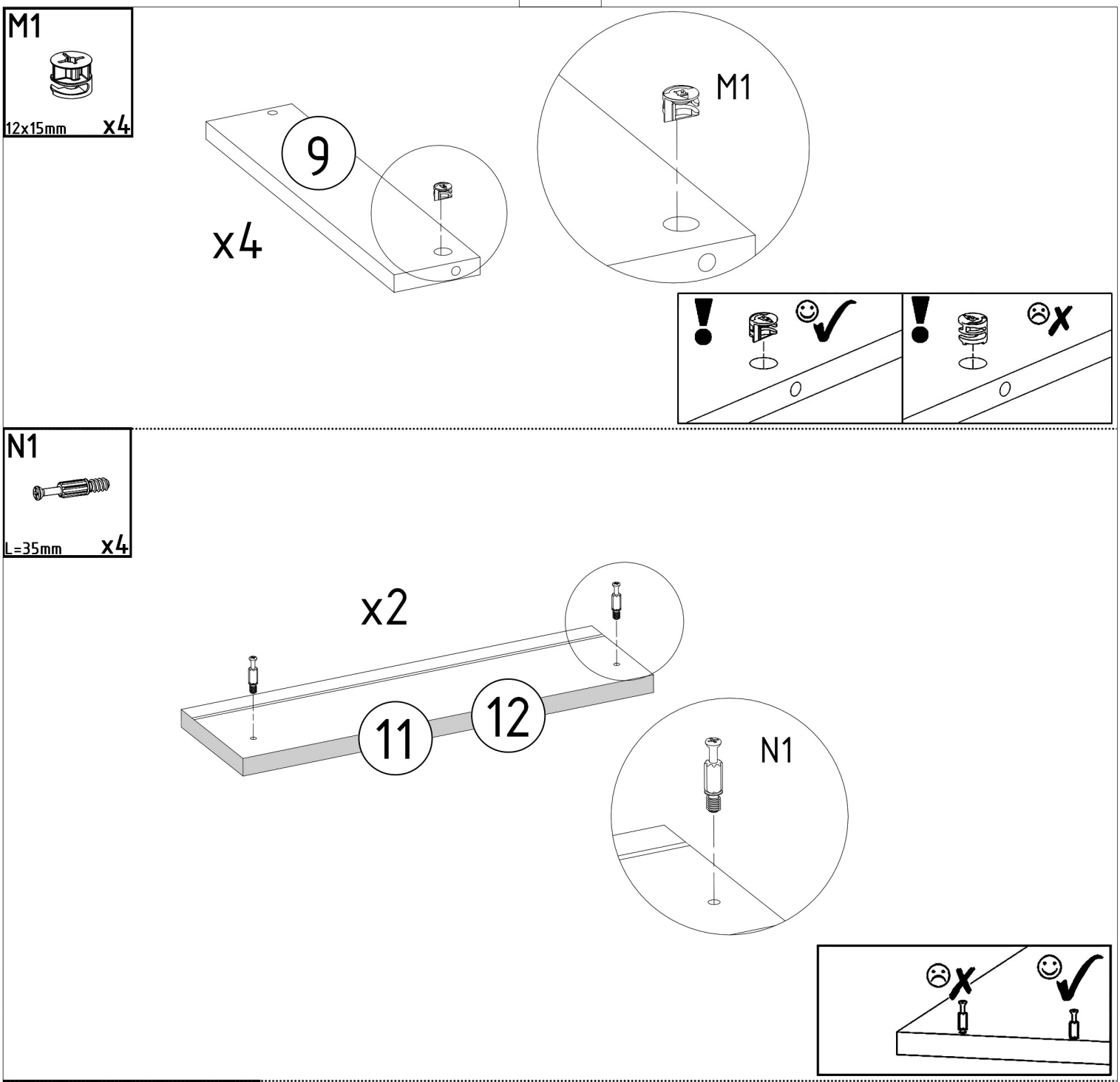
M1
12x15mm
x4
9
x4
M1
N1
L=35mm
x4
x2
11
12
N1
F1
7x50mm
x4
F3
8
9
9
x2
F3
F1

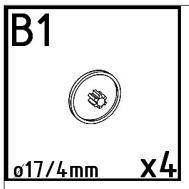
B1
ø17/4mm
x4

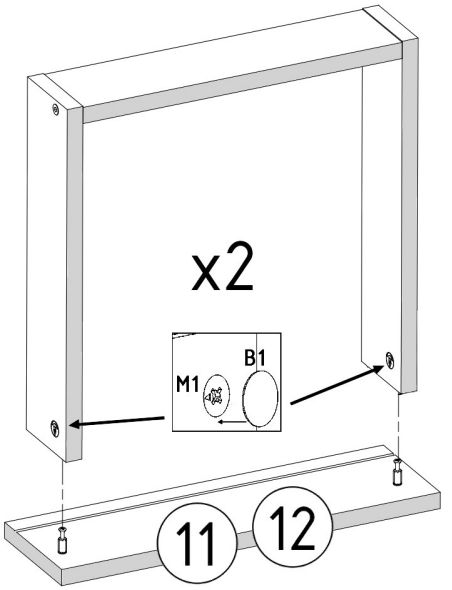
x2
M1
B1
11
12

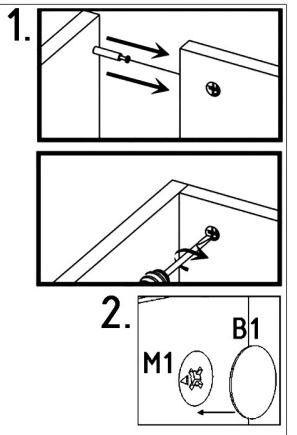
1.
2.
M1
B1

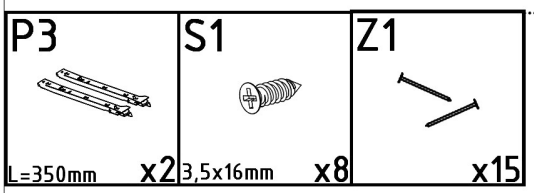
P3
L=350mm
x2
S1
3,5x16mm
x8
Z1
x15

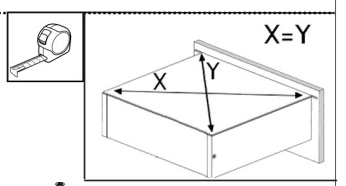
X=Y
X
Y

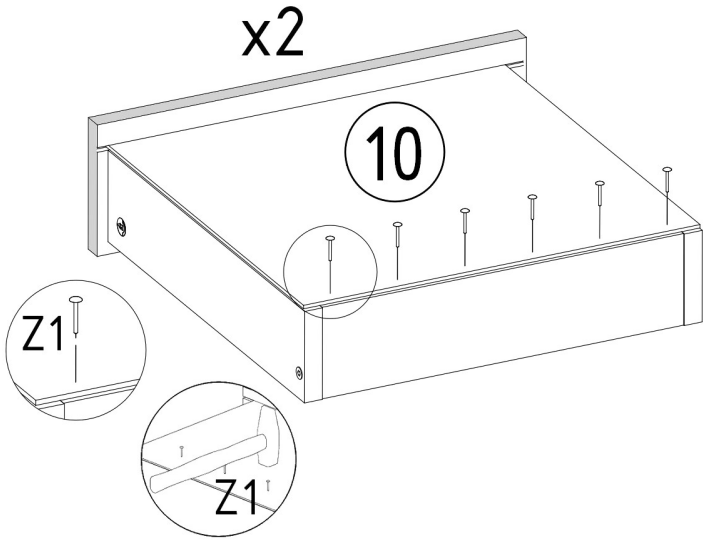
x2
10
Z1
Z1

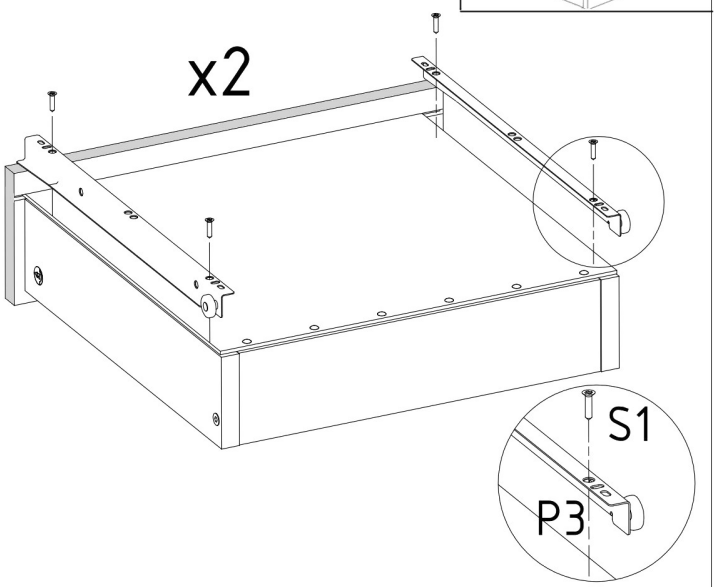
x2
S1
P3

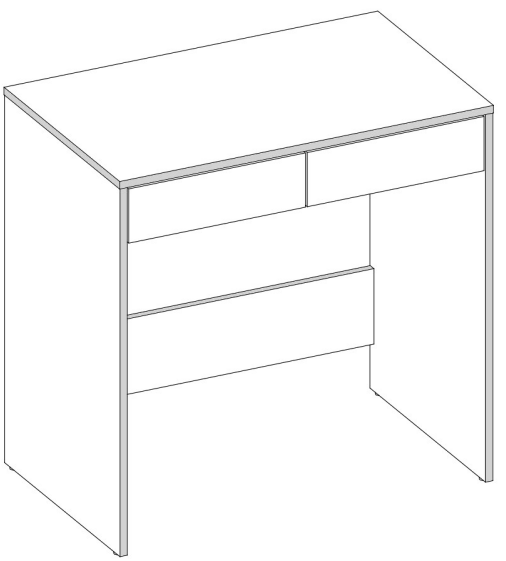

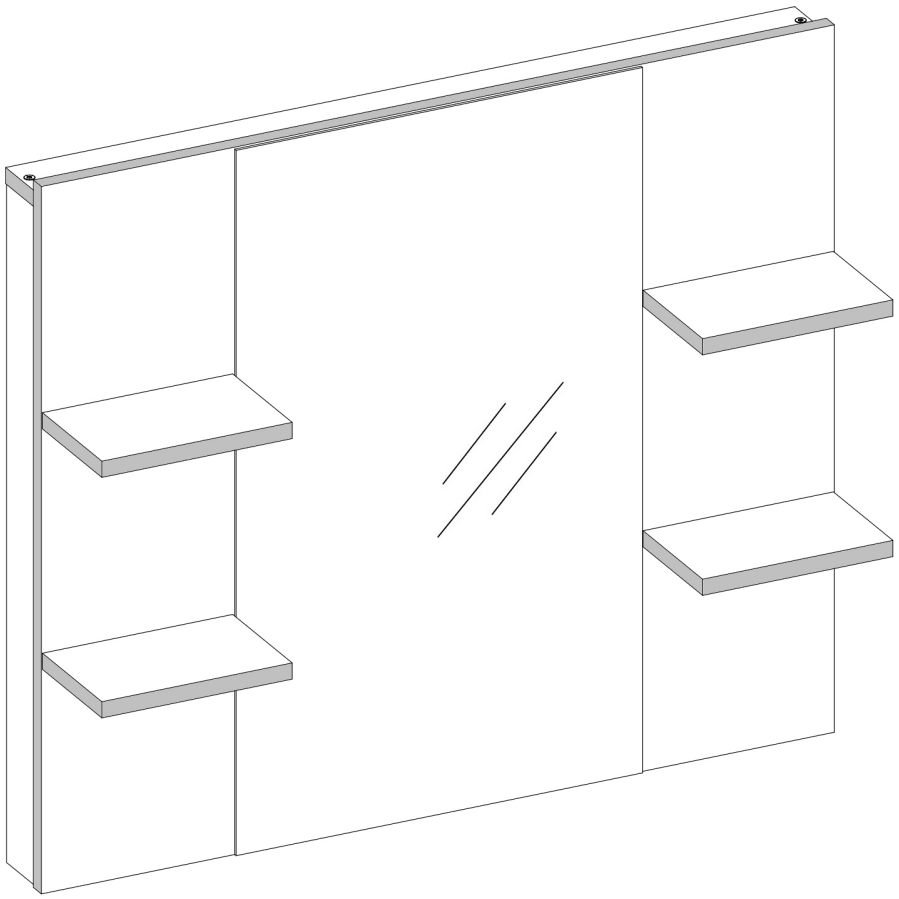

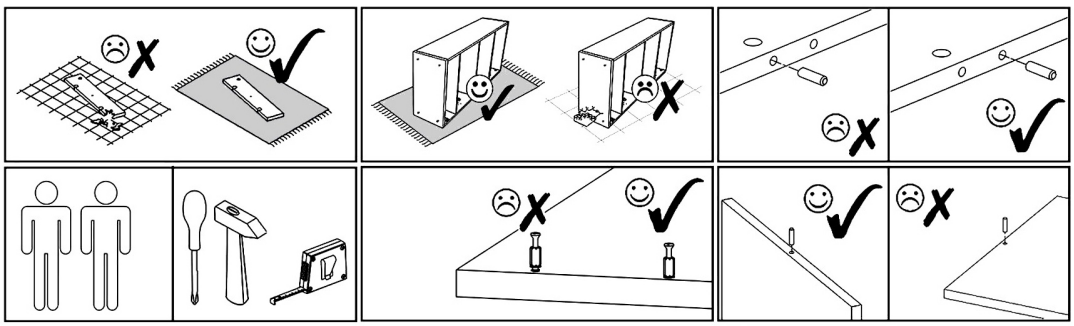

B2	B2			
B ø12/4mm x2	K 12/4mm x2			
S1	V48	F1	F3	V25
3,5x16mm x34	x5	7x50mm x10	x1	x7

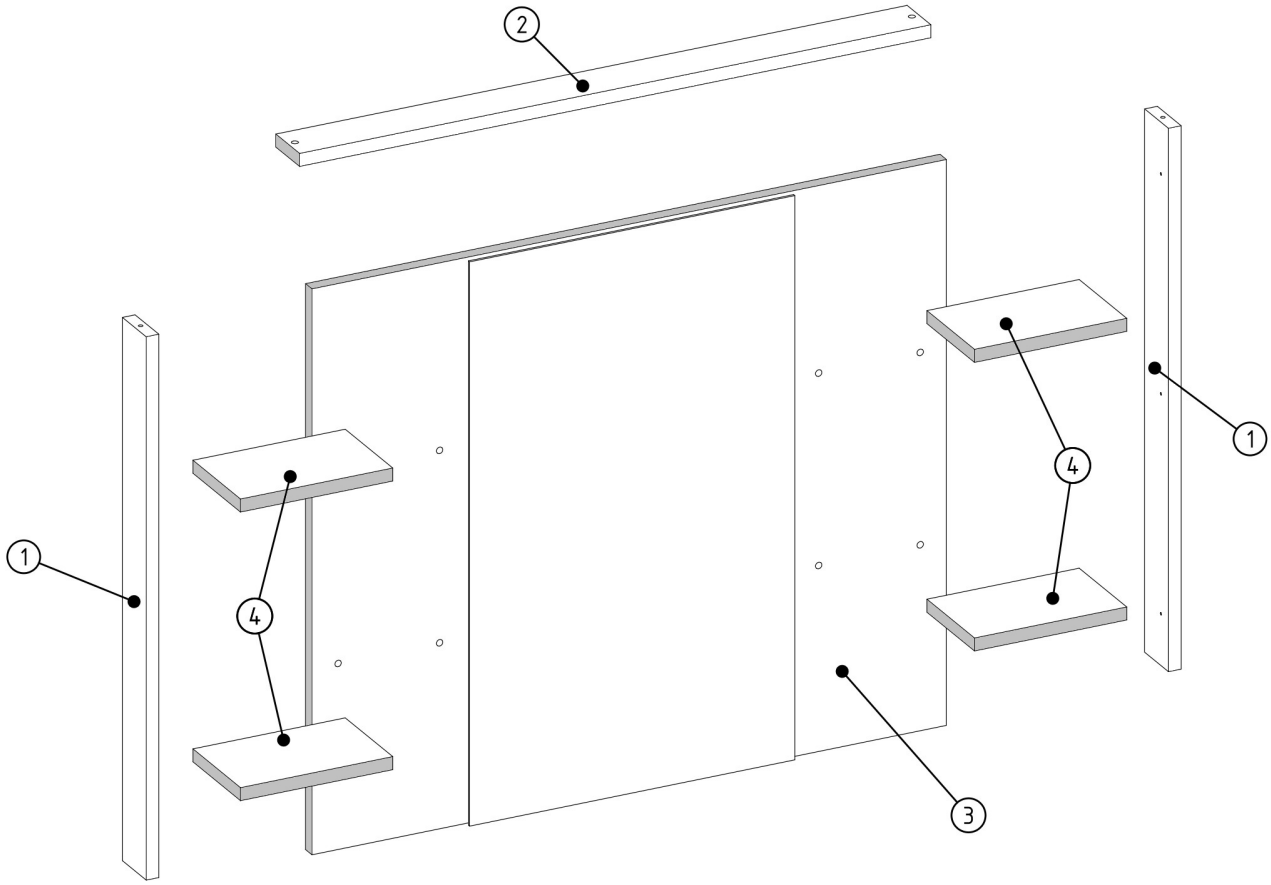

ID	NUMBER	QUANTITY
000415	1	2
000416	2	1
001979	3	1
001980	4	4

V25	S1	V48
x6	3,5x16mm x10	x2

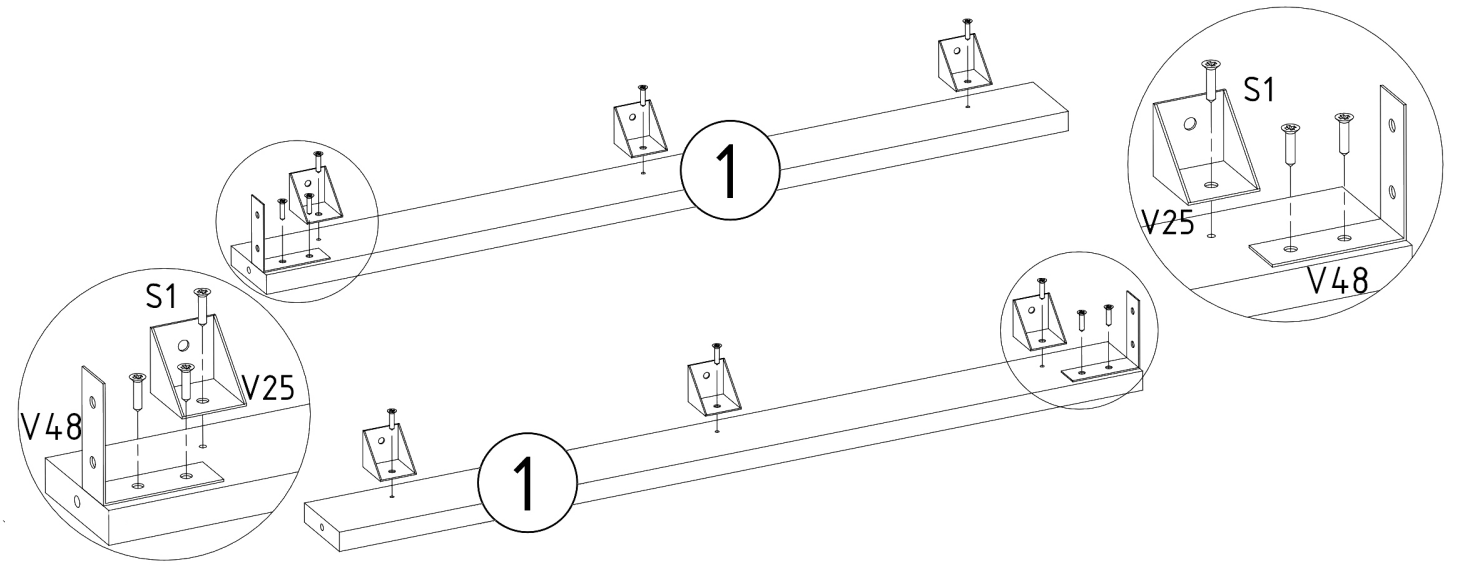

V25	S1
x1	3,5x16mm x1

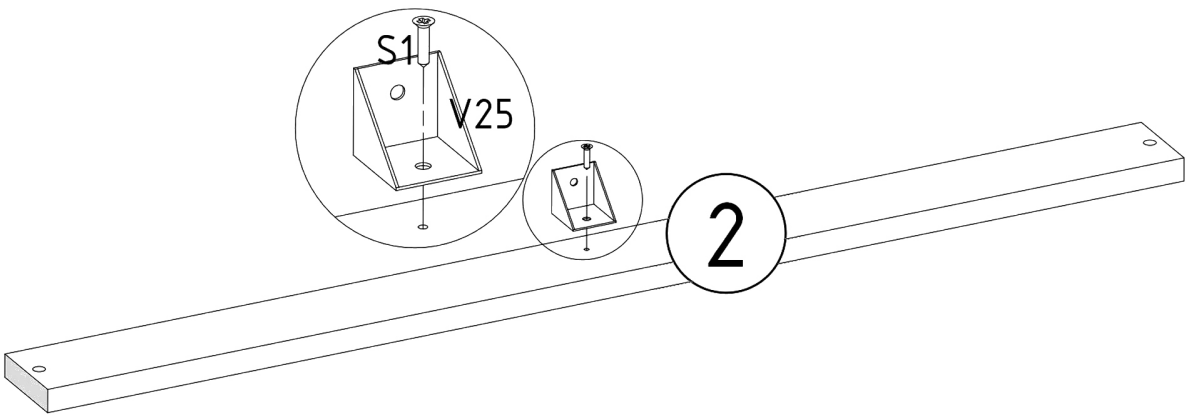

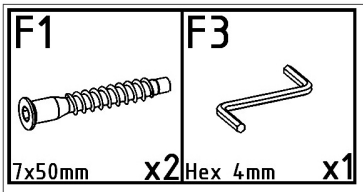
F1
7x50mm
x2
F3
Hex 4mm
x1

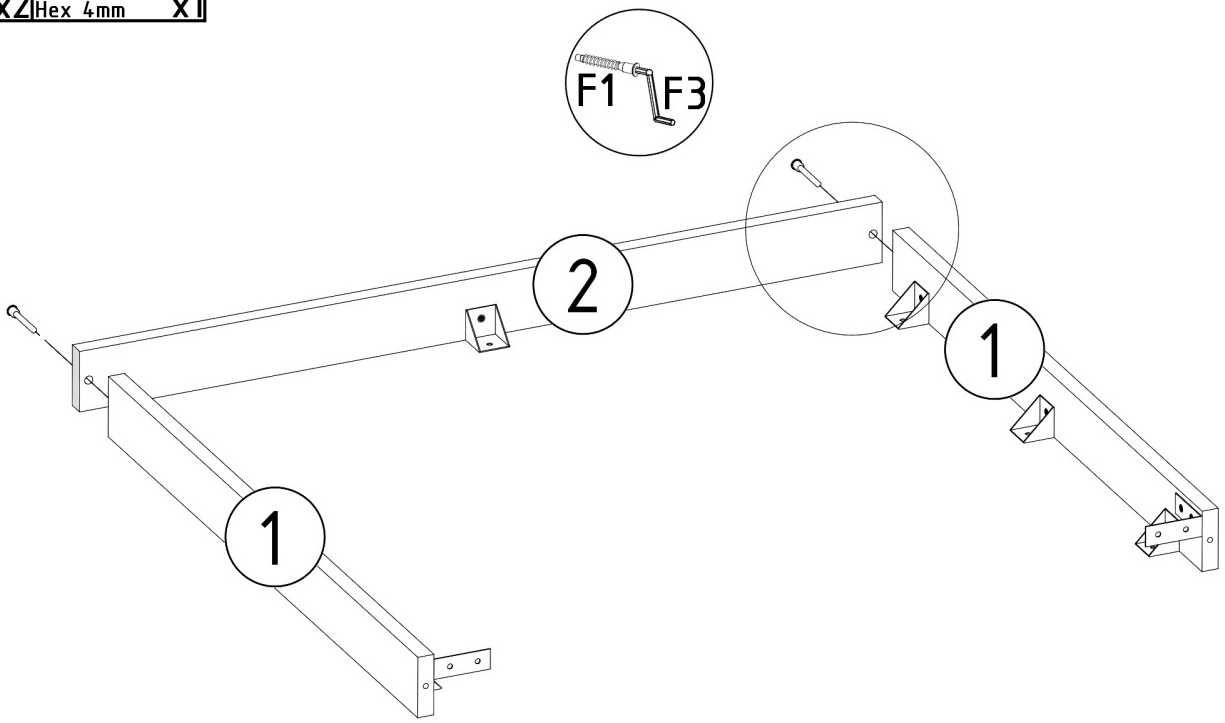
F1
F3
2
1
1

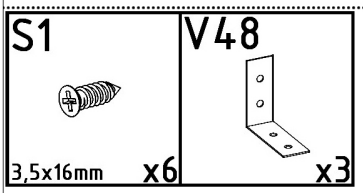
S1
3,5x16mm
x6
V48
x3

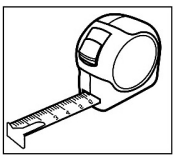

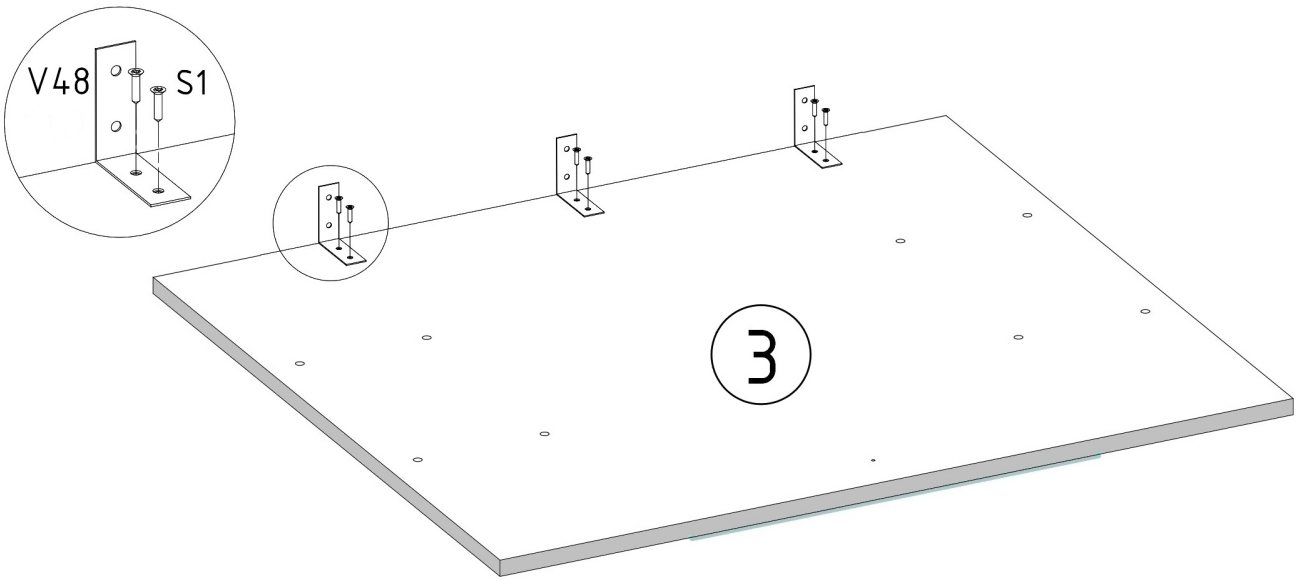
V48
S1
3

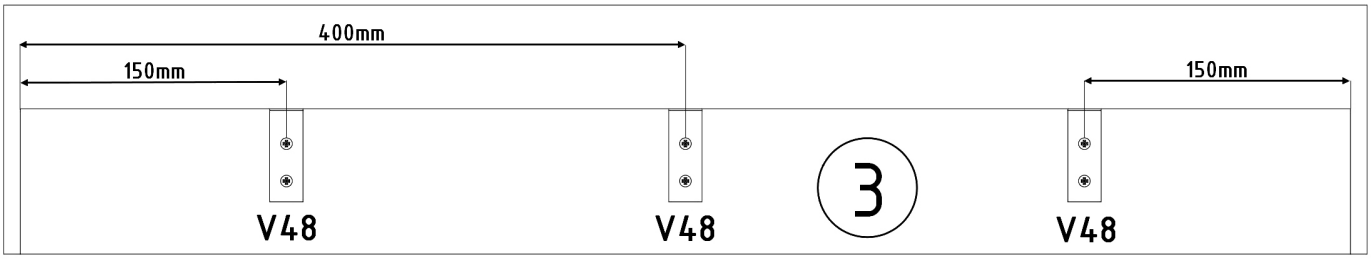
400mm
150mm
150mm
V48
V48
3
V48

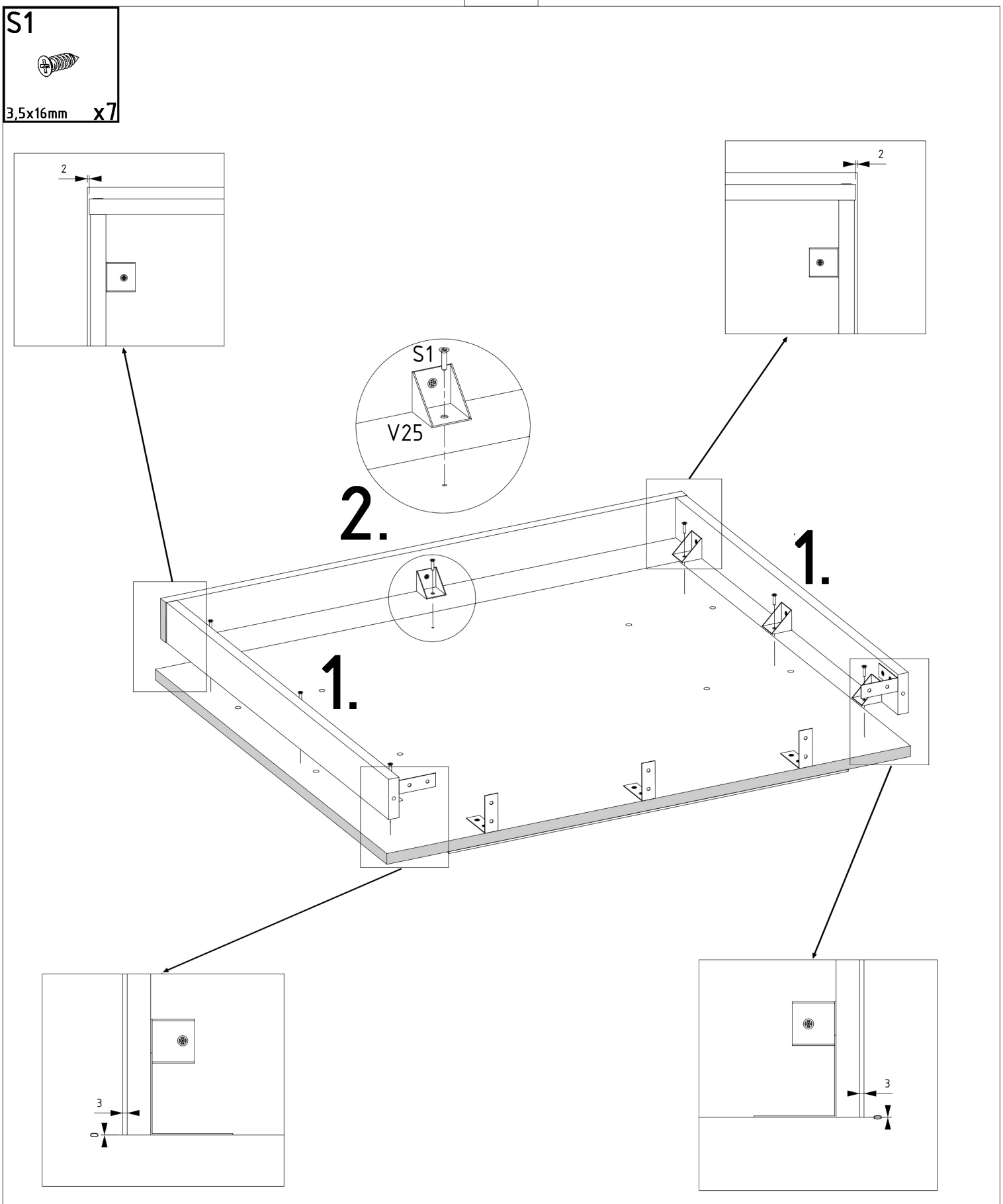
S1
3,5x16mm
x7
2
2
S1
V25
2.
1.
1.
3
3

F1	F3
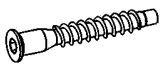	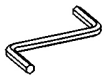
7x50mm x8	Hex 4mm

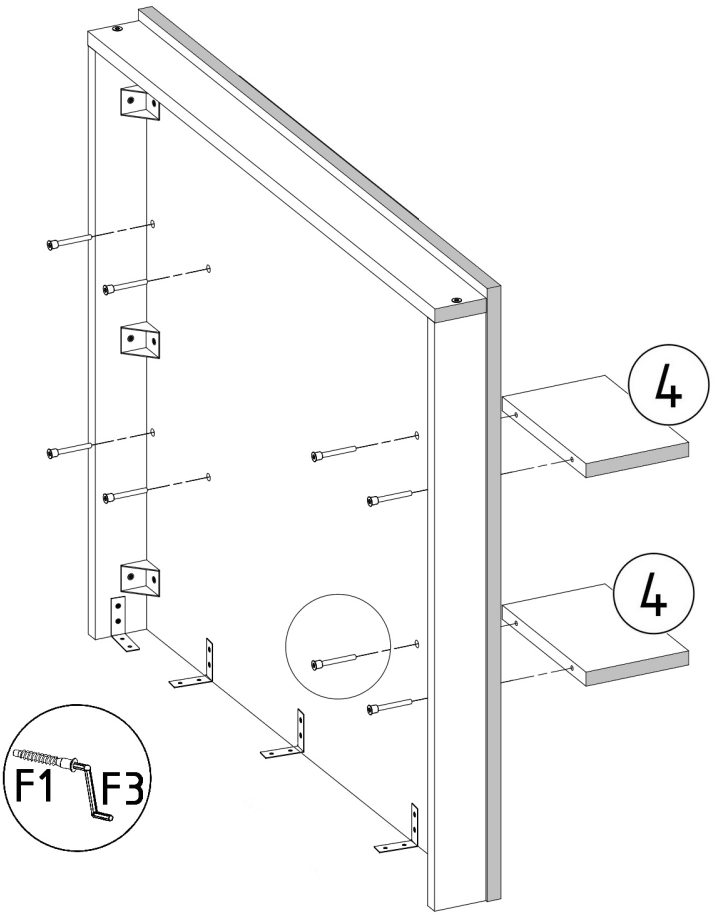

B2	S1
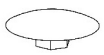	
ø12/4mm x2	3,5x16mm x10

