INSTRUKCJA MONTAŻU

Szafka nocna 40 cm z 2 szufladami

Kolor: Biały

Kod produktu: OR10452

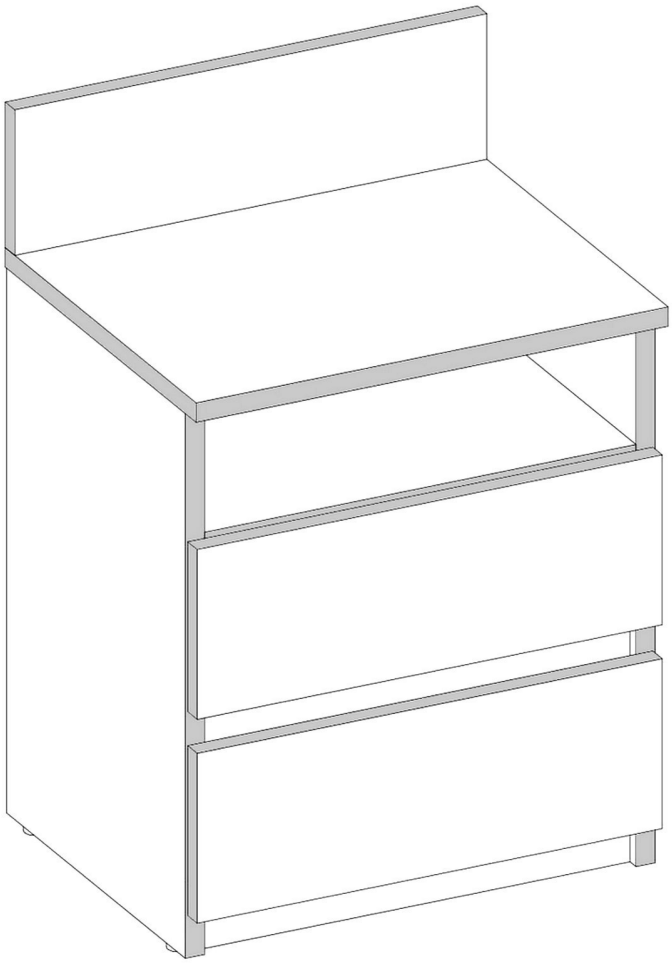

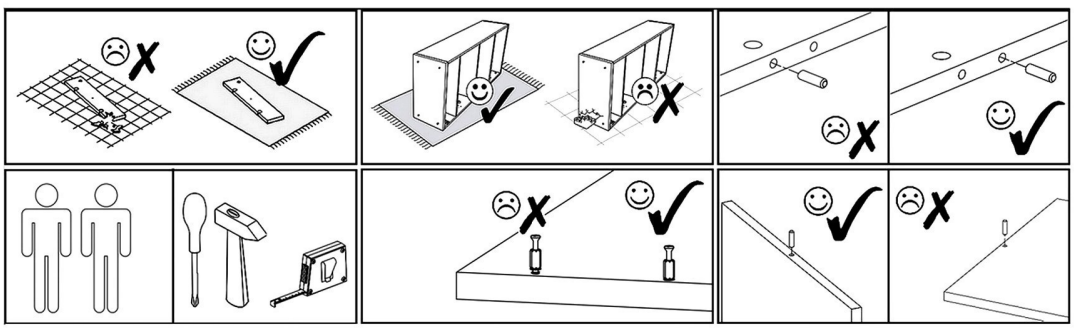

R1  6x8mm x8	S8 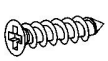 4x35mm x2	B1  B ø17/4mm x4	T1  x4	F1 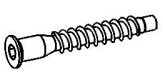 7x50mm x4	F3 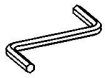 Hex 4mm x1	V16  5x16mm x4
N1  L=35mm x10	M1  12x15mm x10	E1  8x30mm x4	S1  3,5x16mm x8	V12  x1	Z1  x30	P1 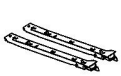 L=250mm x2

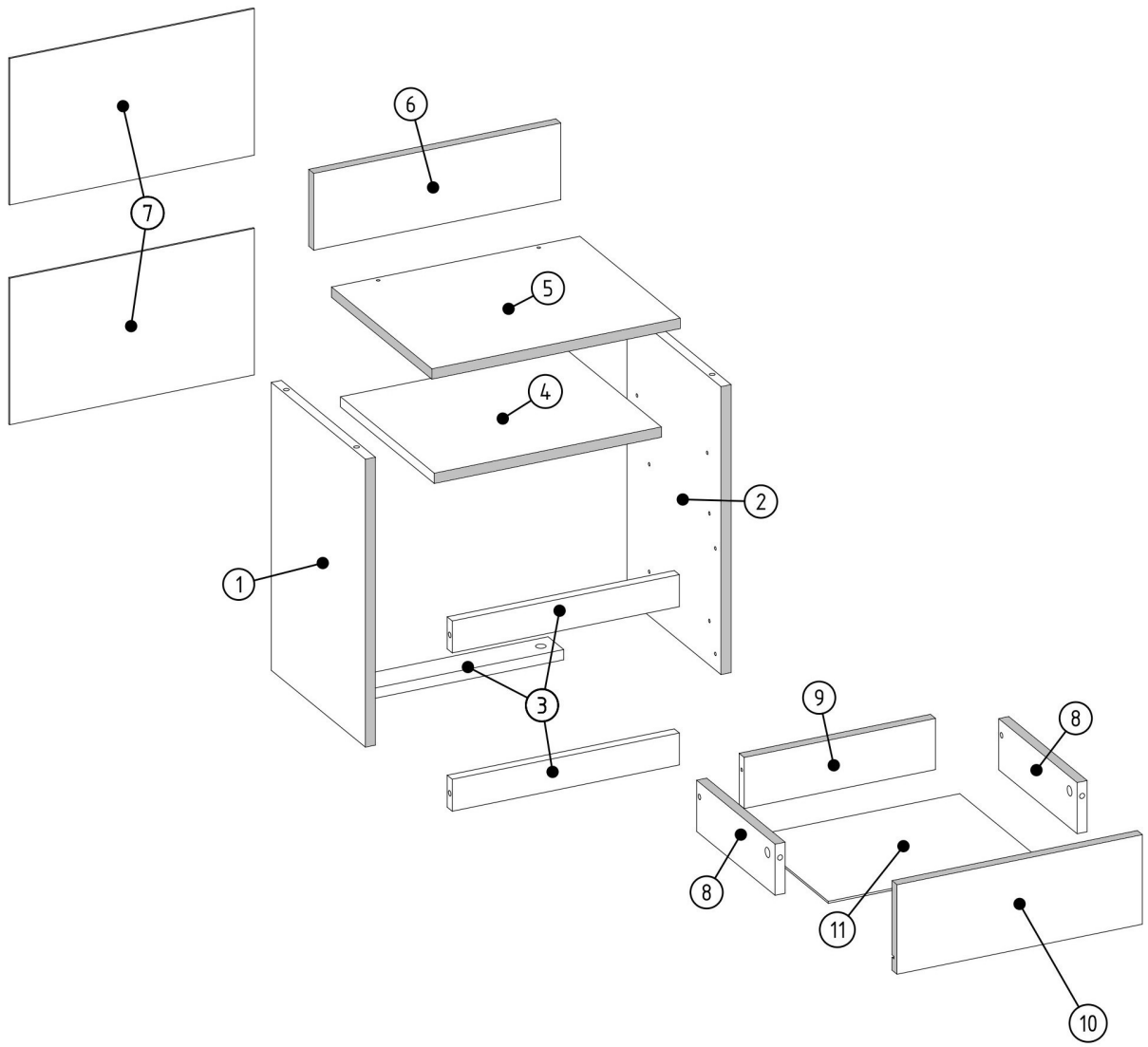

ID	NUMBER	QUANTITY
002235	1	1
002236	2	1
000620	3	3
002240	4	1
002234	5	1
002237	6	1
002239	7	2
000009	8	4
002243	9	2
002238	10	2
000623	11	2

E1	R1	T1	P1	N1	V16
8x30mm x2	6x8mm x4	x2	L=250mm x2	L=35mm x3	5x16mm x2

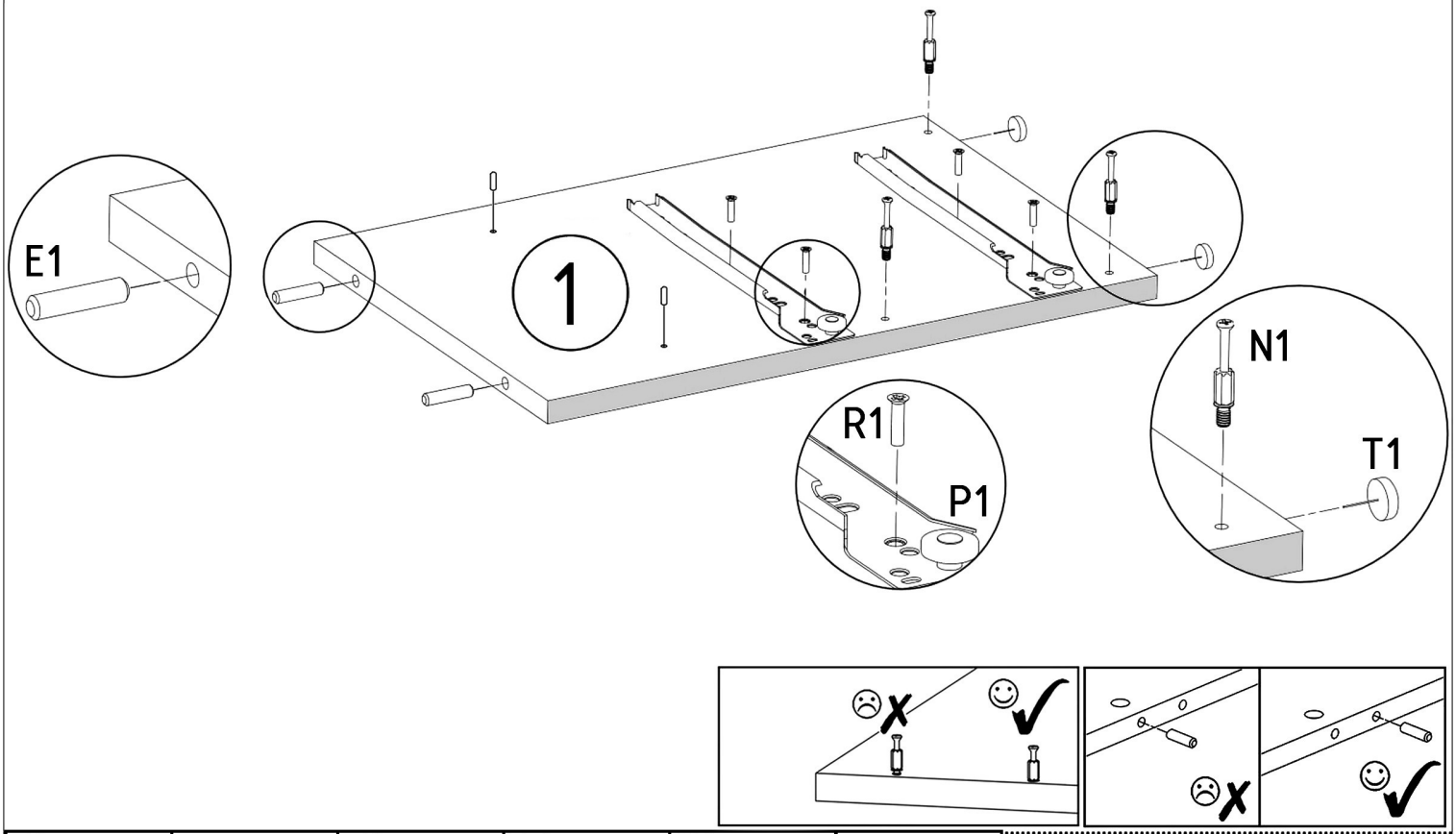

E1	R1	T1	P1	N1	V16
8x30mm x2	6x8mm x4	x2	L=250mm x2	L=35mm x3	5x16mm x2

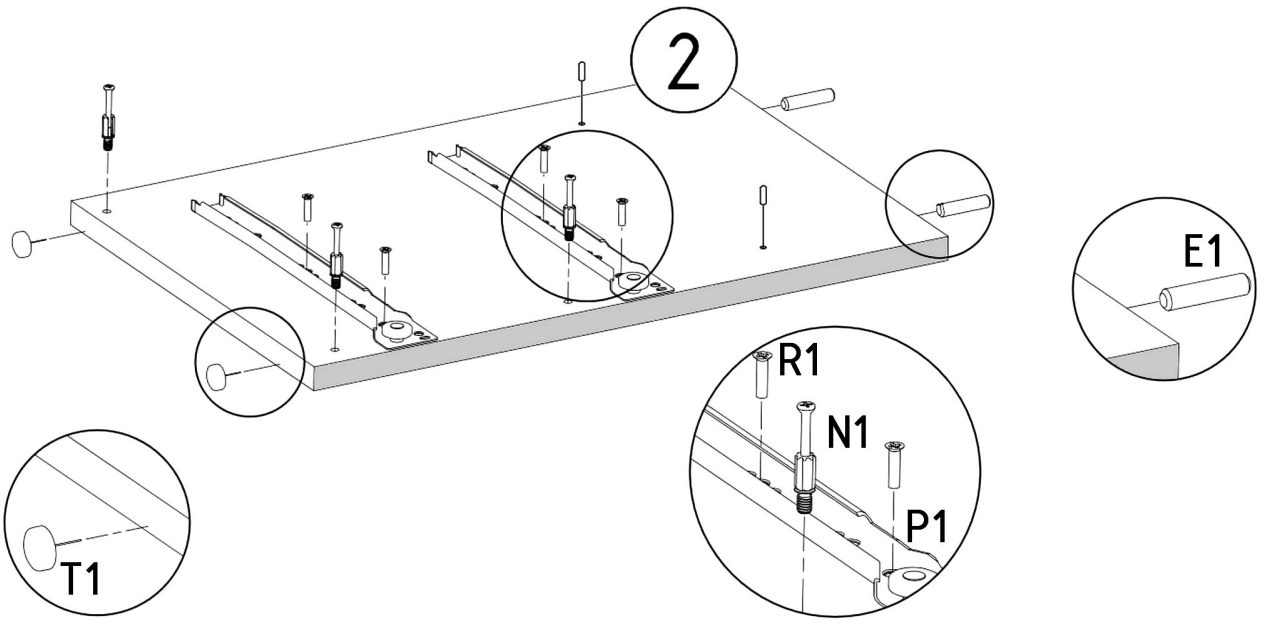

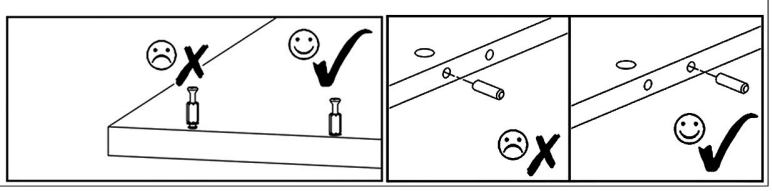

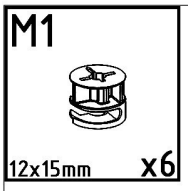
M1
12x15mm
x6

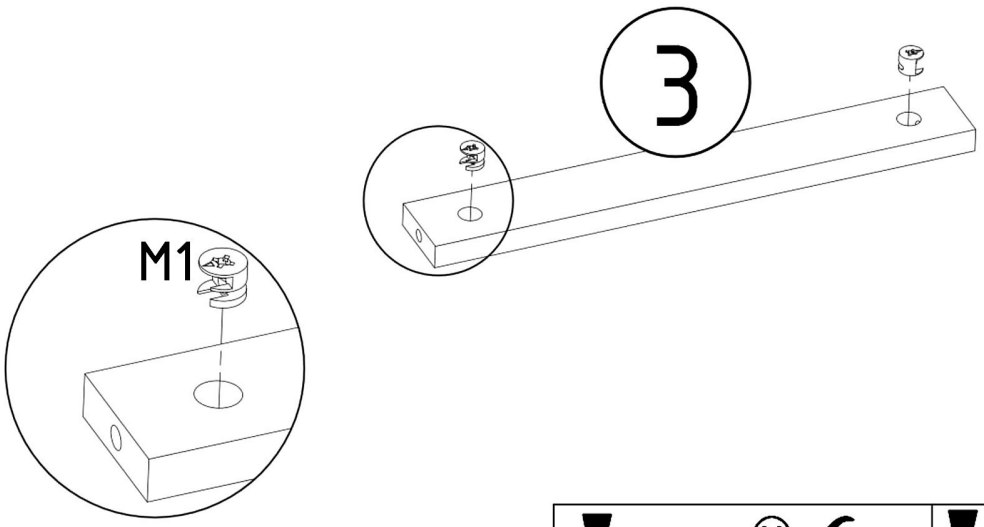
3
M1

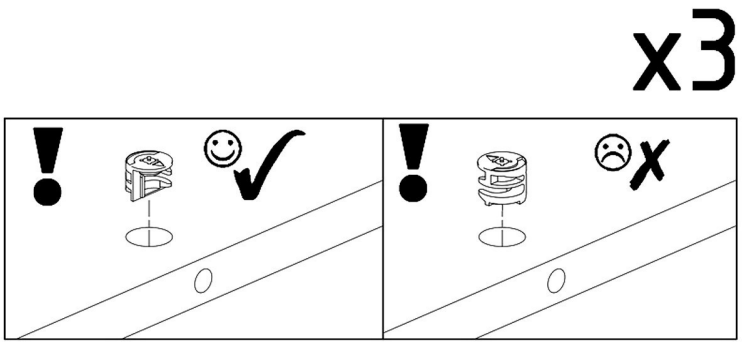
x3

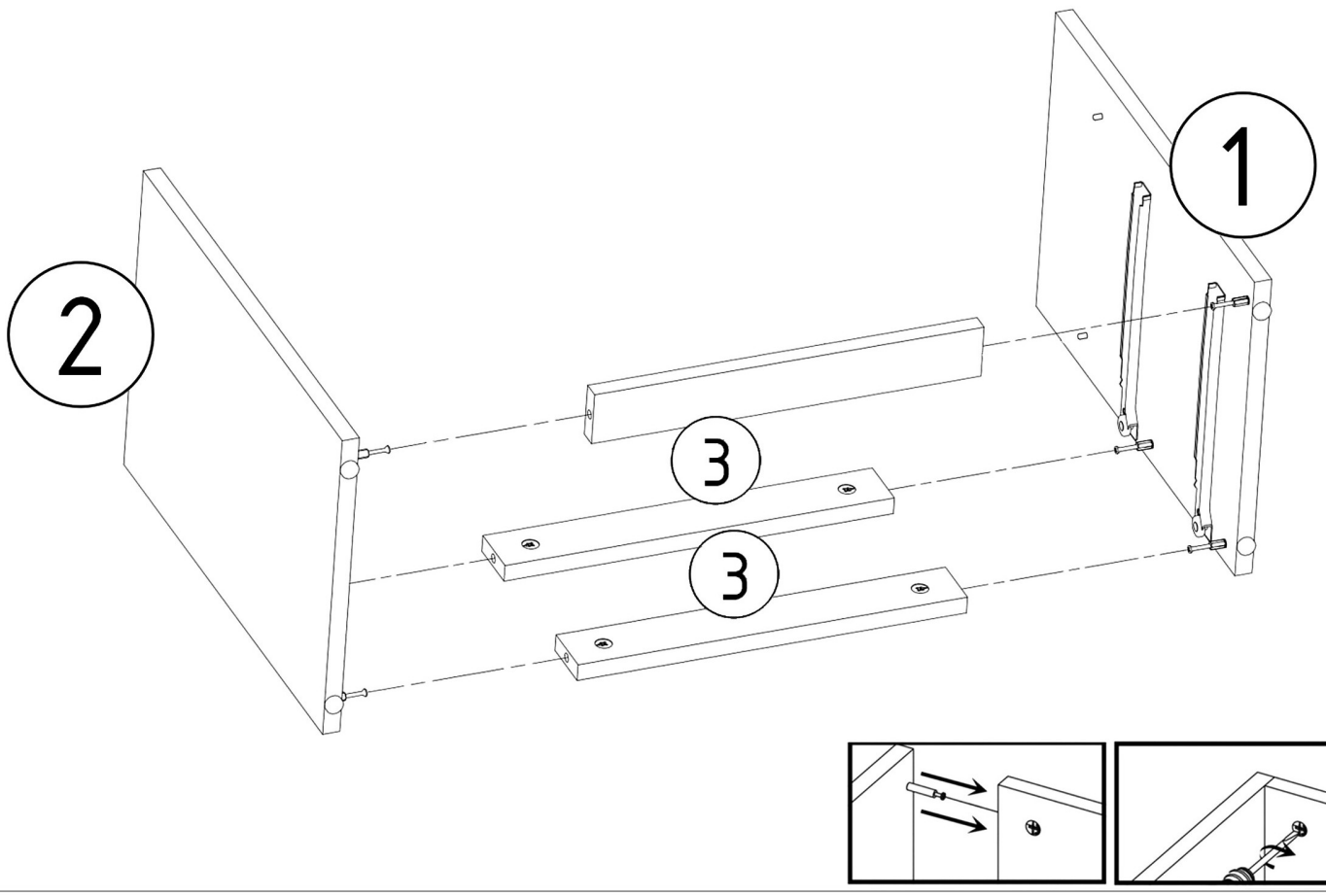
1
2
3
3

S8



4x35mm x2

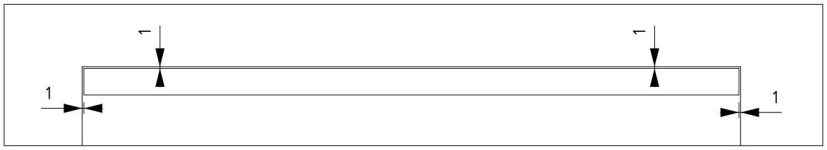

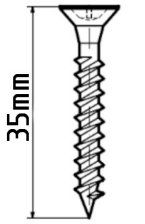

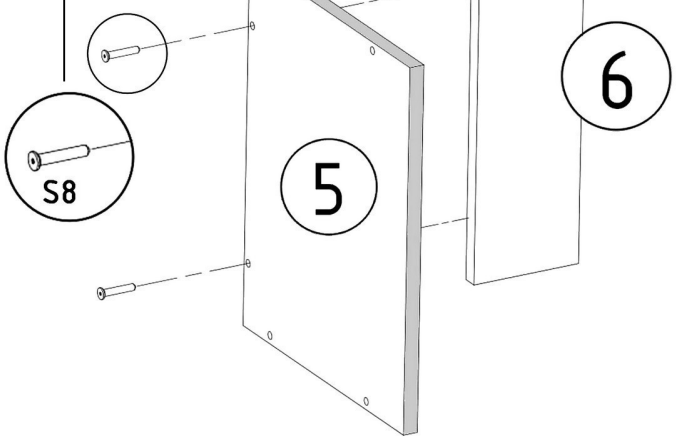

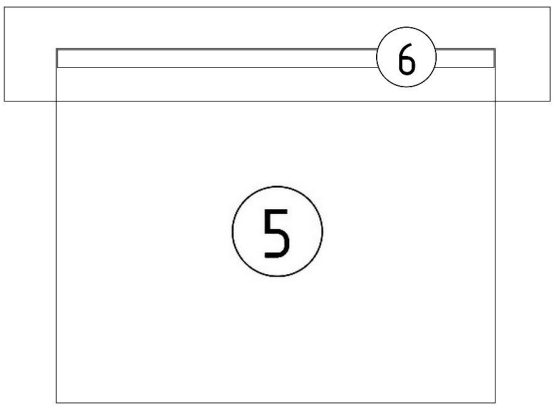

V12



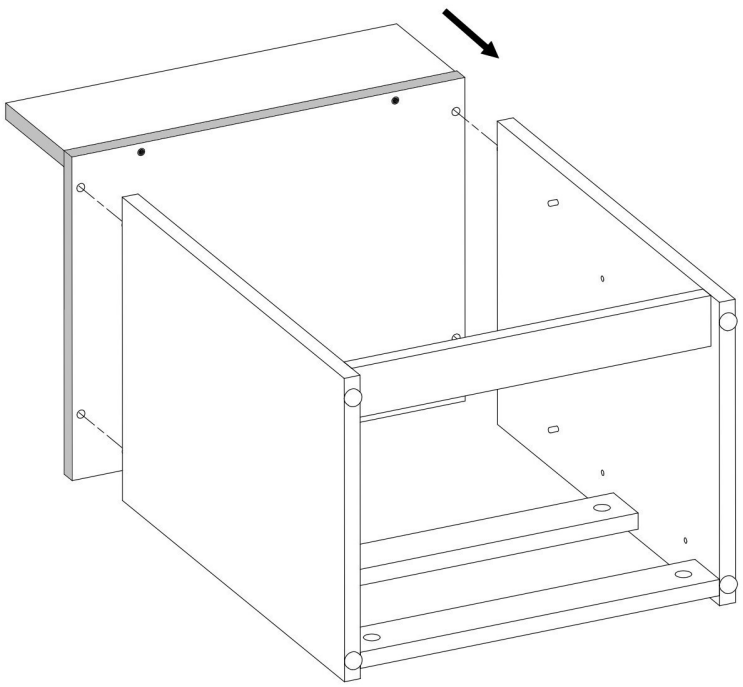

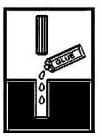

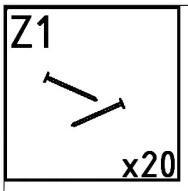
Z1
x20

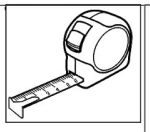

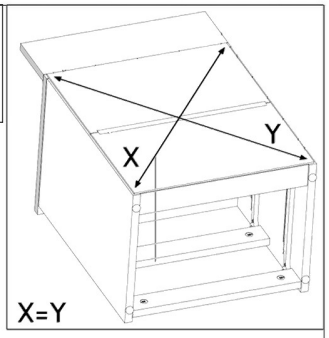
X
Y
X=Y

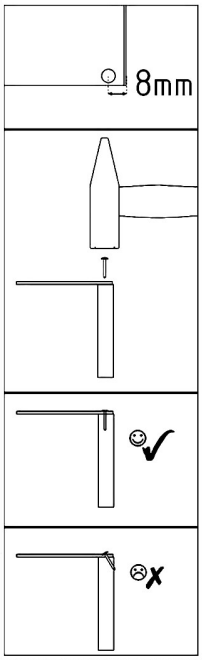
8mm

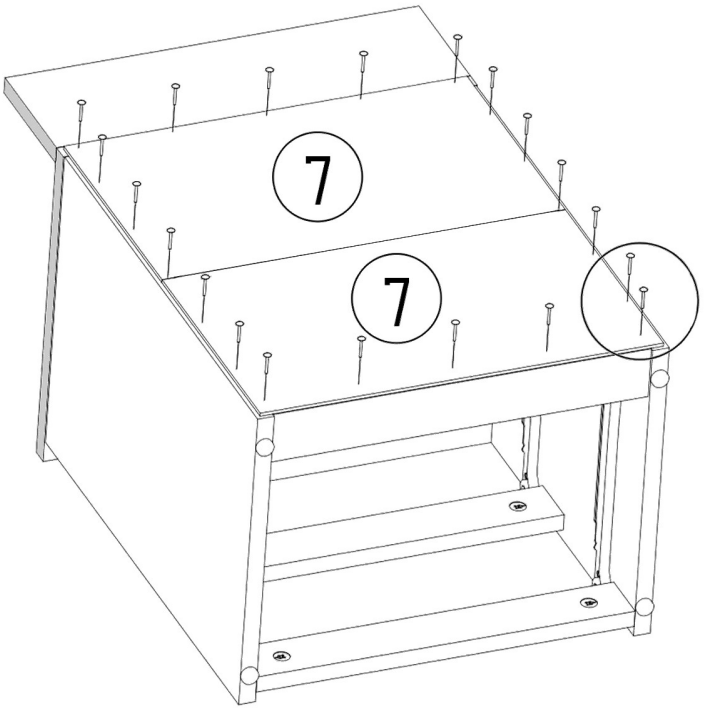
7
7

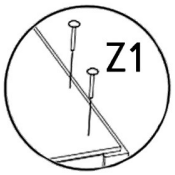
Z1

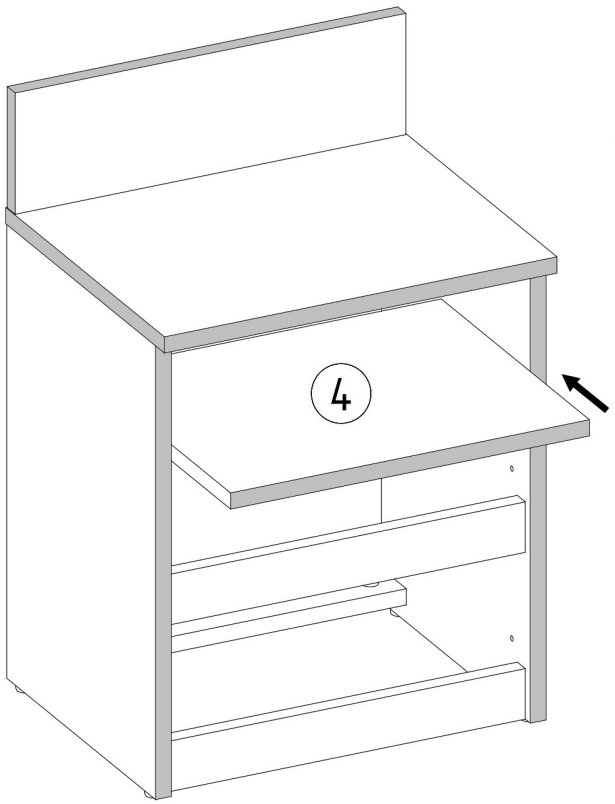
4

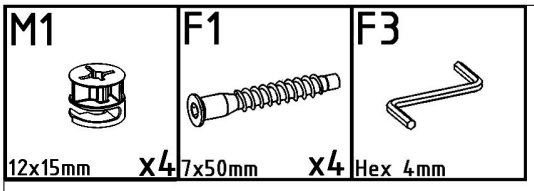
M1
12x15mm
x4
F1
7x50mm
x4
F3
Hex 4mm

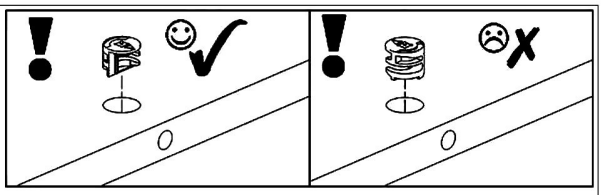

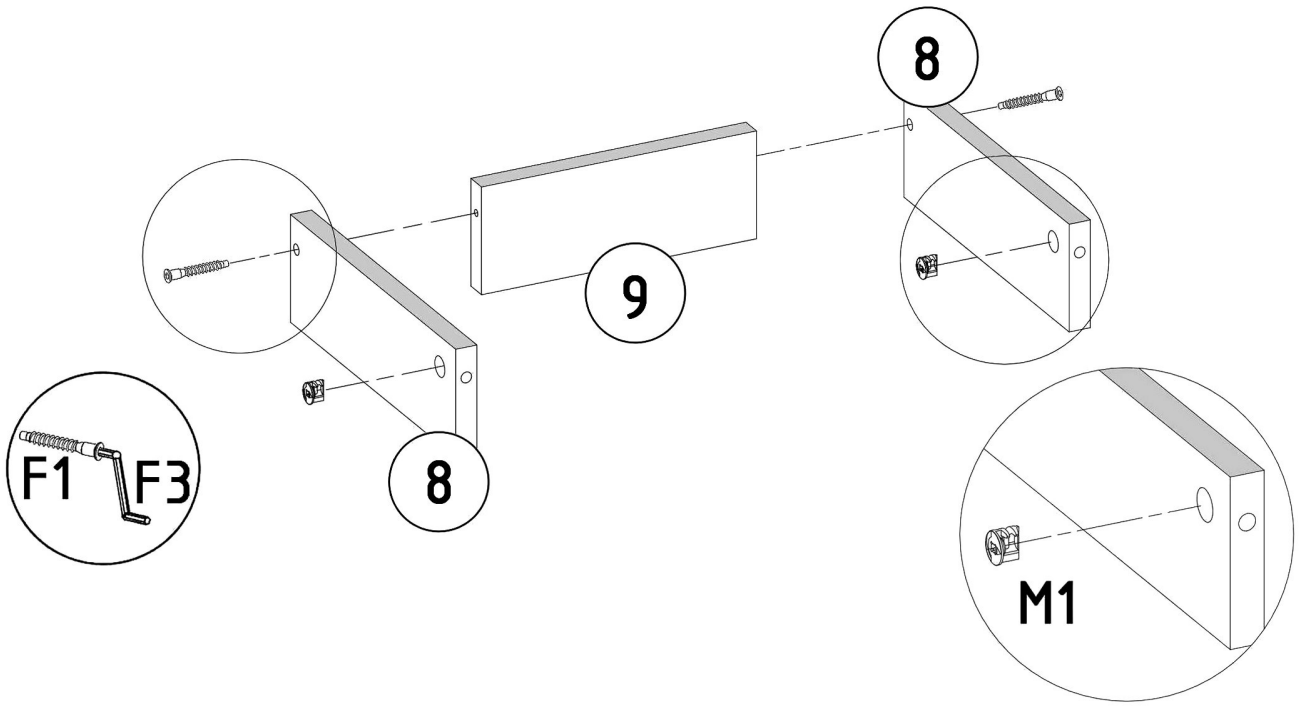
8
9
F1
F3
8
M1

x2

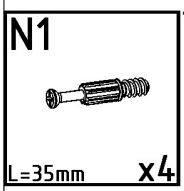
N1
L=35mm
x4

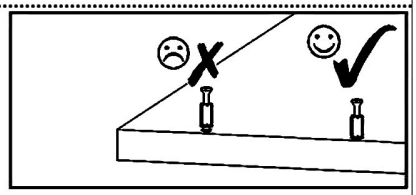

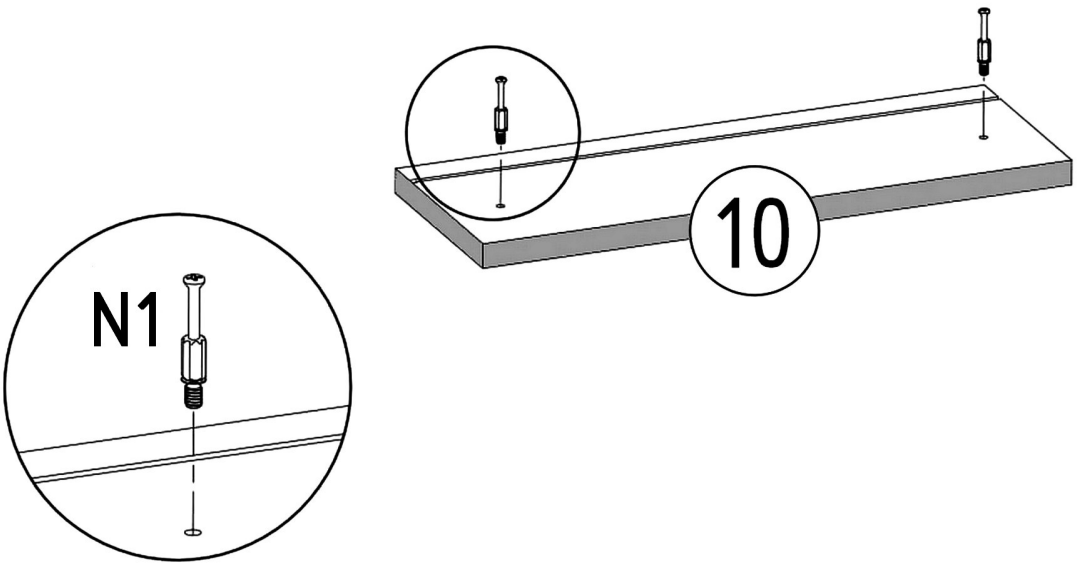
10
N1

x2

B1

ø17/4mm x4

1.

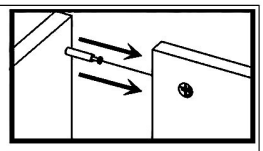

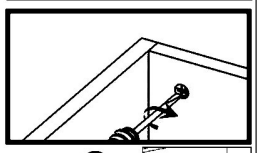

2.

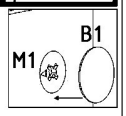

x2

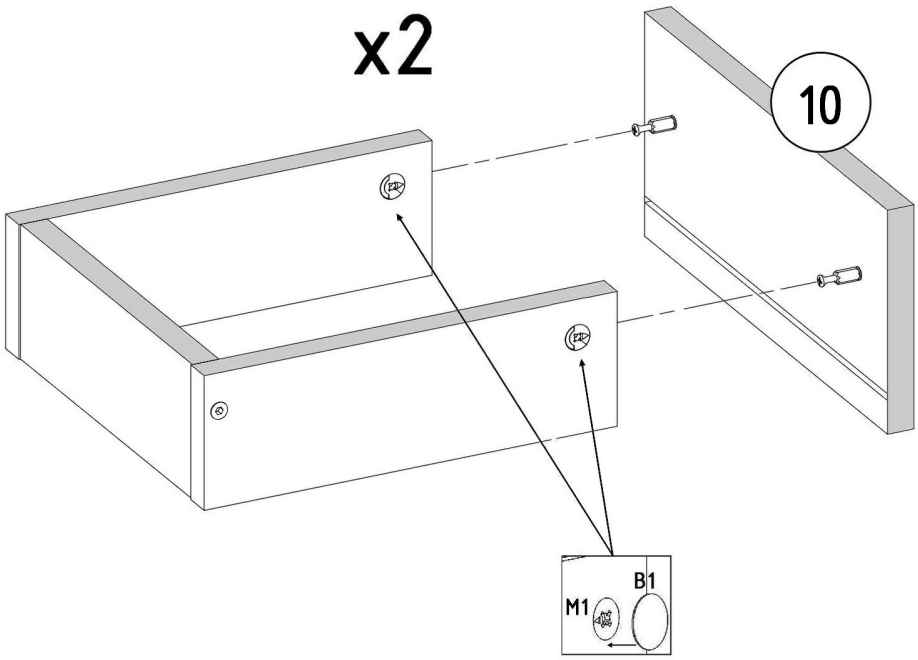

x2

Z1

x10

S1

3,5x16mm x8

P1

L=250mm x2

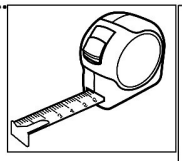

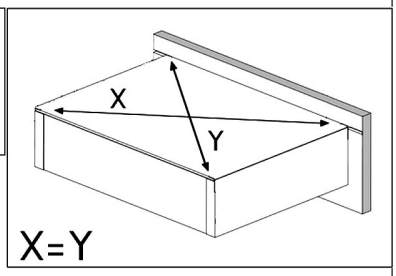

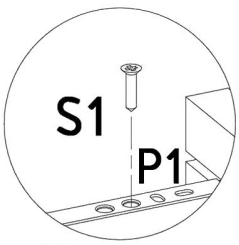

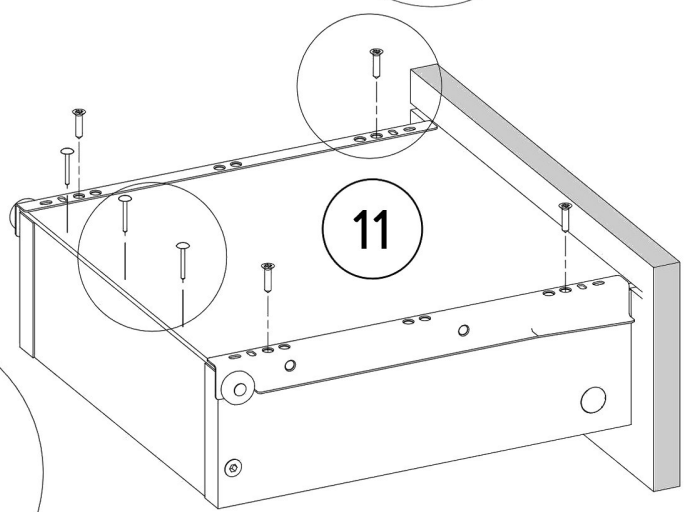

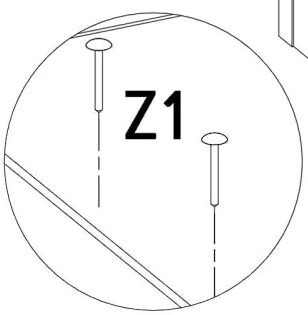

x2

