INSTRUKCJA MONTAŻU

Szafka nocna 55 cm z 2 szufladami TIP-ON

Kolor: Biały

Kod produktu: OR10446

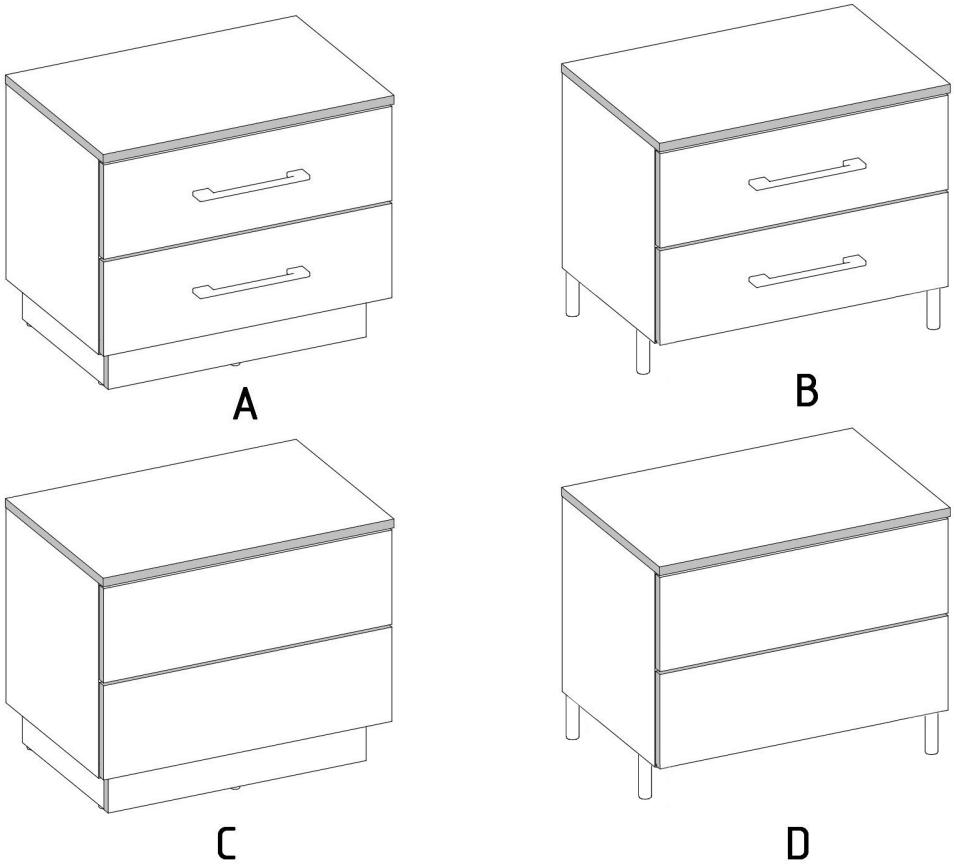

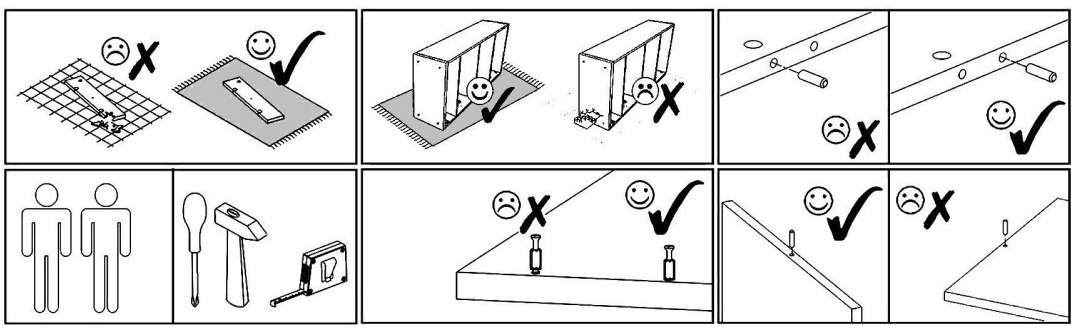

B1 B ø17/4mm x4	V12 GLUE x1						
N1 L=35mm x16	S1 3,5x16mm x22	R7 4x27mm x4	T1 x5	U6 L=208/160 x2	S9 4x16mm x12	V62 x4	V25 x3
F1 7x50mm x4	F3 Hex 4mm x1	E1 8x30mm x18	Z1 x40	R1 6x8mm x8	T6 H=100mm x4	P2 L=300mm x2	M1 12x15mm x16

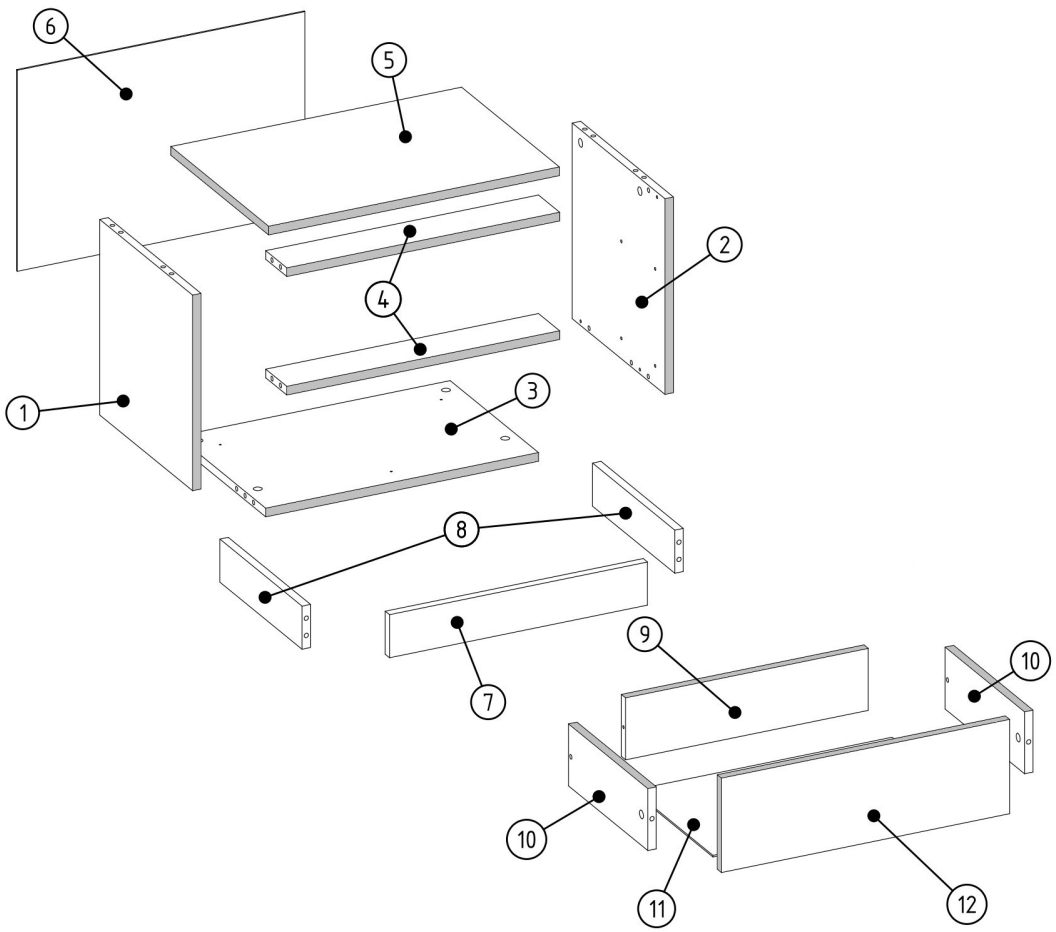

001816	12	2
001812	11	2
001361	10	4
001811	9	2
001817	8	2
001818	7	1
001819	6	1
001813	5	1
001815	4	2
001814	3	1
001820	2	1
001821	1	1
ID	NUMBER	QUANTITY

E1	M1	N1	R1	P2
8x30mm x2	12x15mm x2	L=35mm x4	6x8mm x4	L=300mm x2

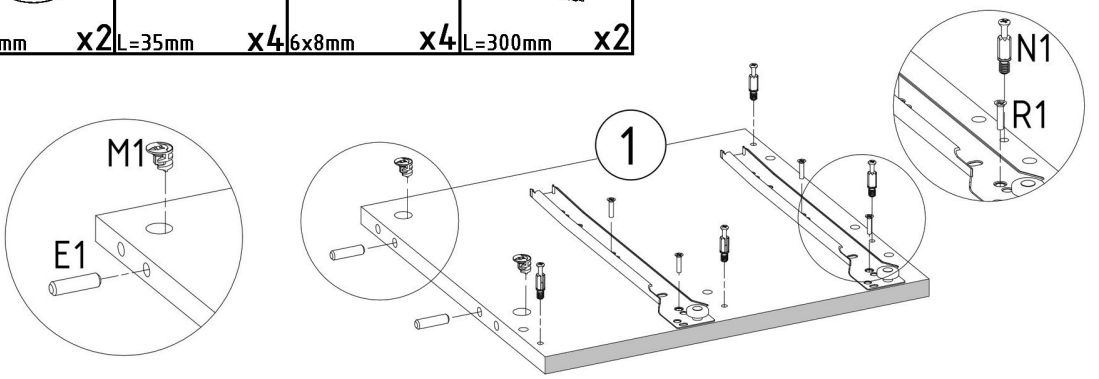

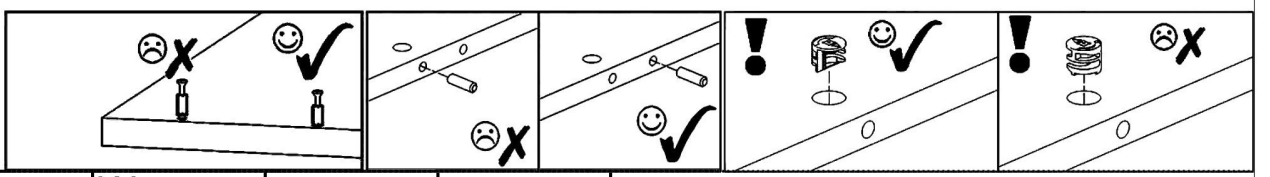

E1	M1	N1	R1	P2
8x30mm x2	12x15mm x2	L=35mm x4	6x8mm x4	L=300mm x2

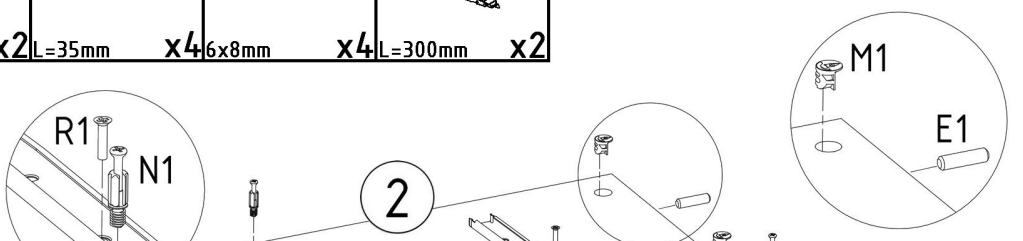

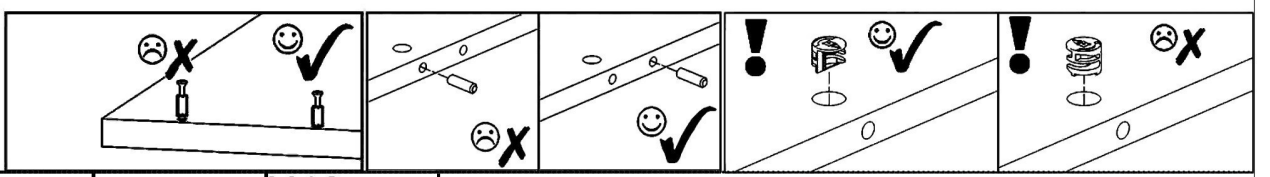

S1	E1	M1	V62
3,5x16mm x8	8x30mm x4	12x15mm x4	x4

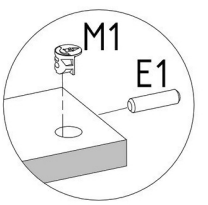

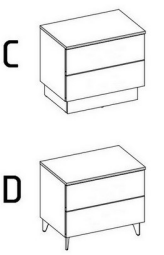

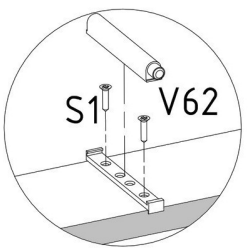

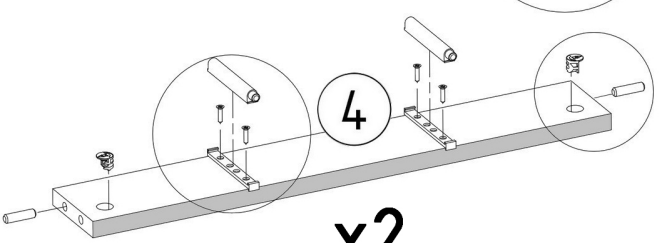

x2

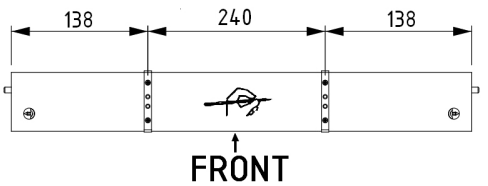

E1	M1
8x30mm x4	12x15mm x4

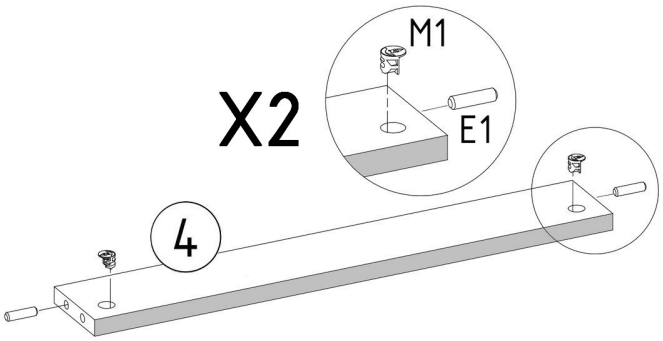

A



B



E1	M1
8x30mm x6	12x15mm x4

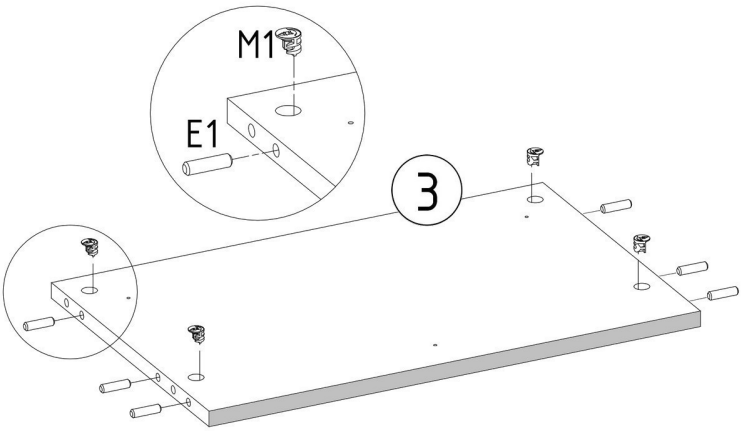

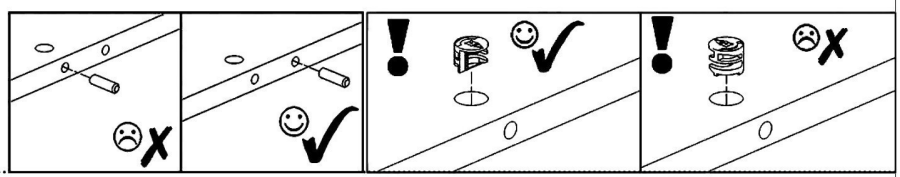

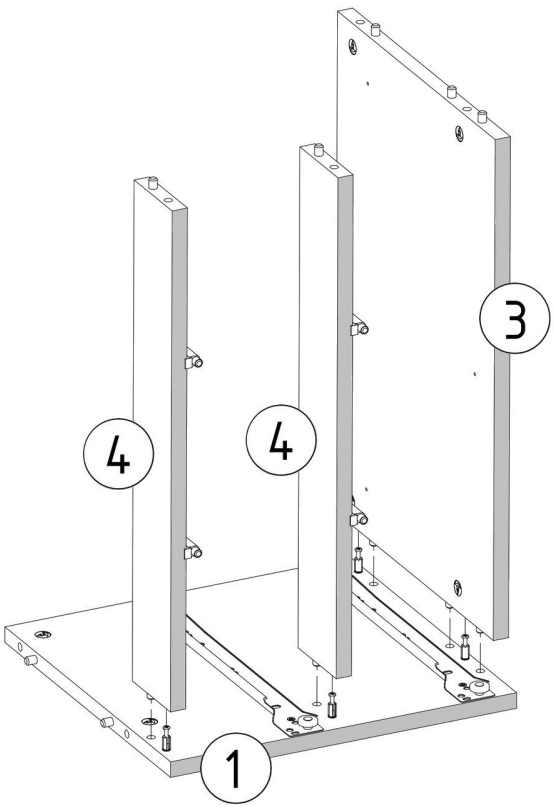

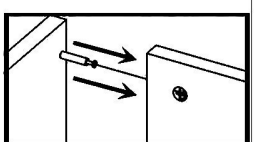

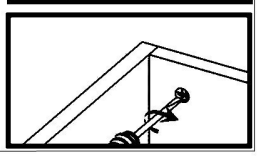

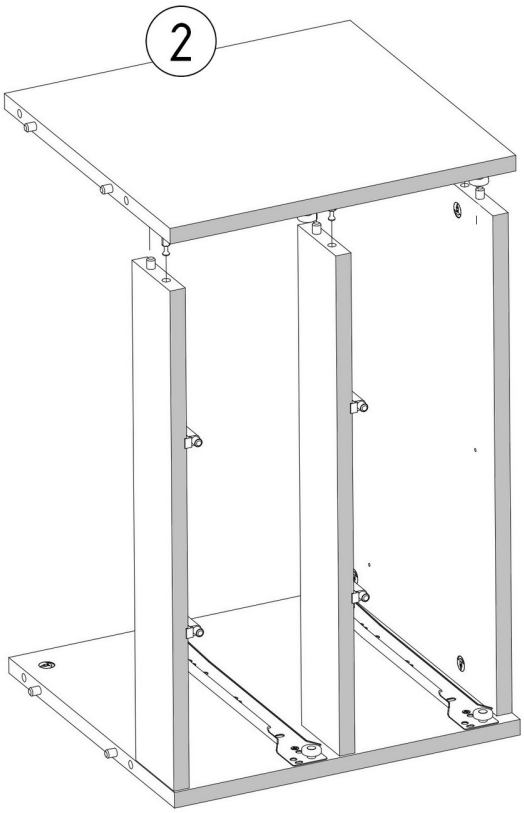

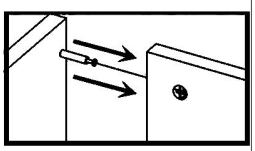

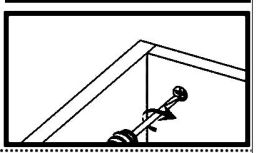

N1



L=35mm x4

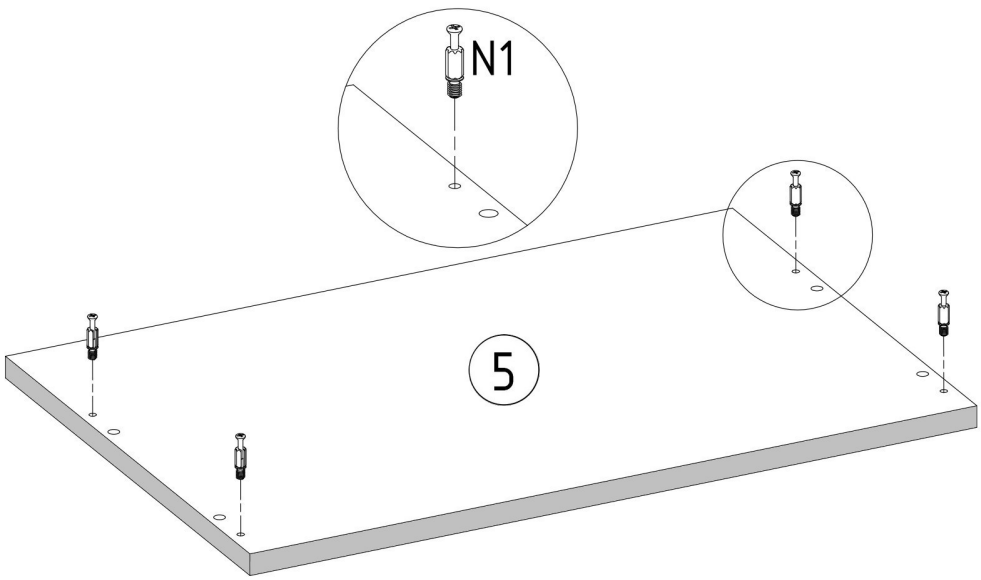

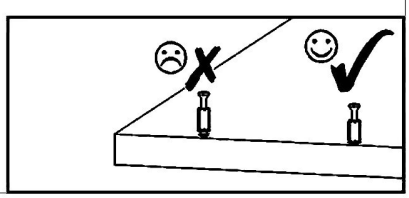

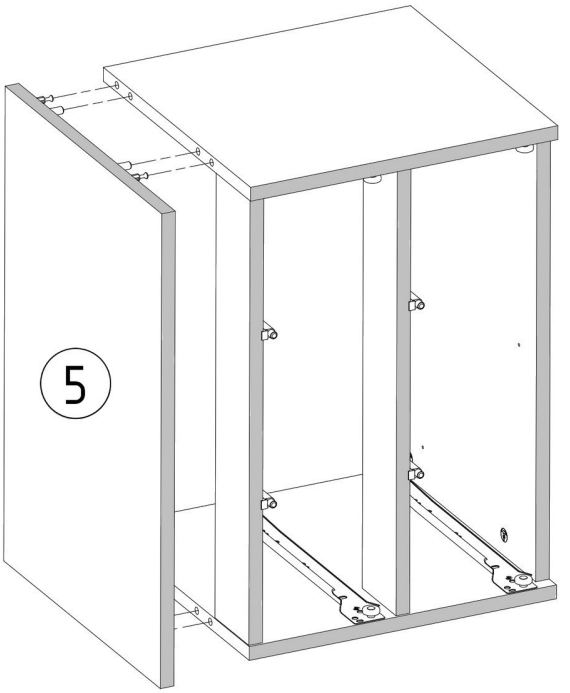

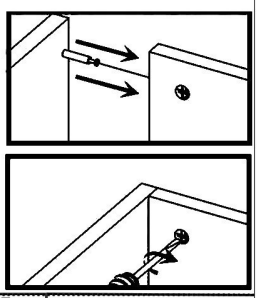

Z1

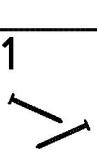

x30

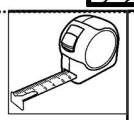

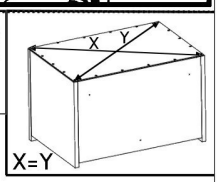

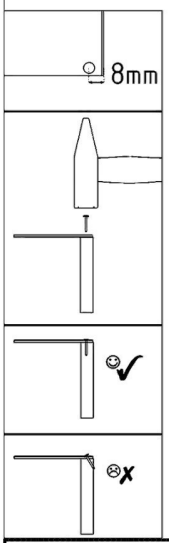

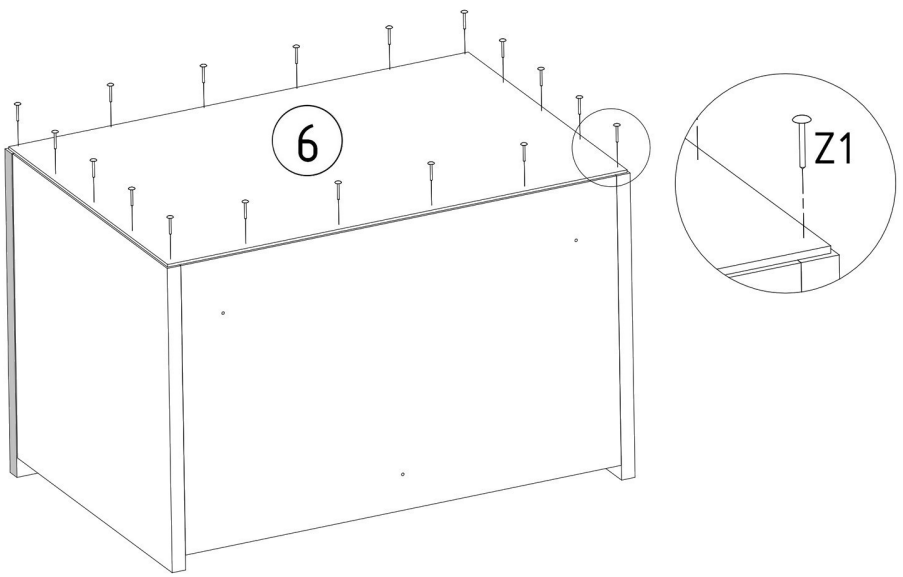

T1



x5

E1



8x30mm x4

V12







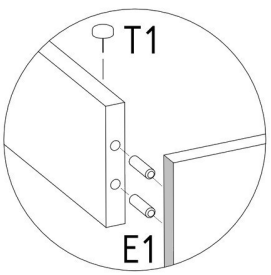

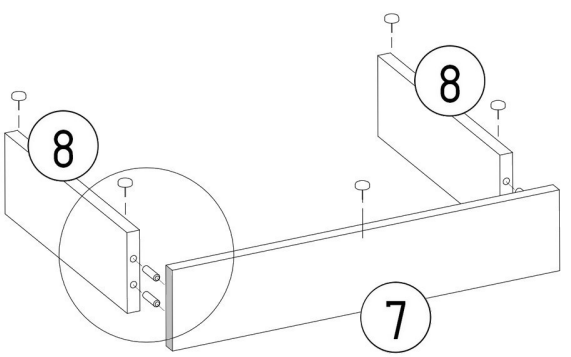

V25	S1
x3	3,5x16mm x6

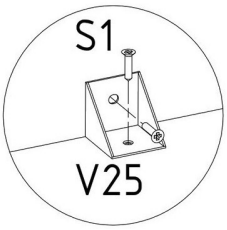

1


2
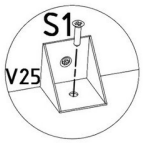

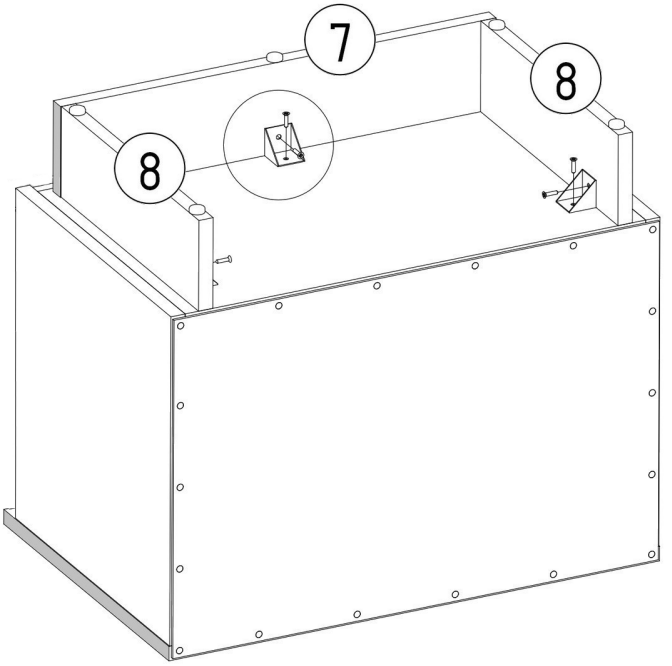

A


C


S9	T6
4x16mm x12	H=100mm x4

B


D


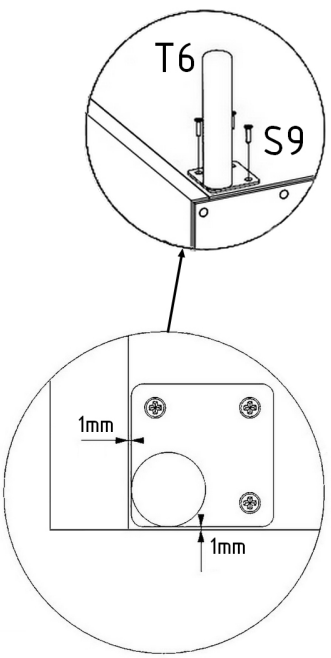

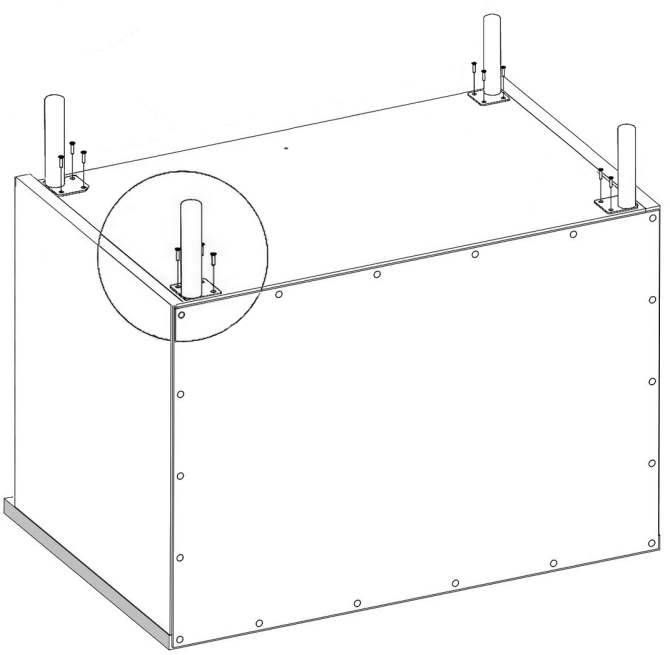

N1



L=35mm x4

X2

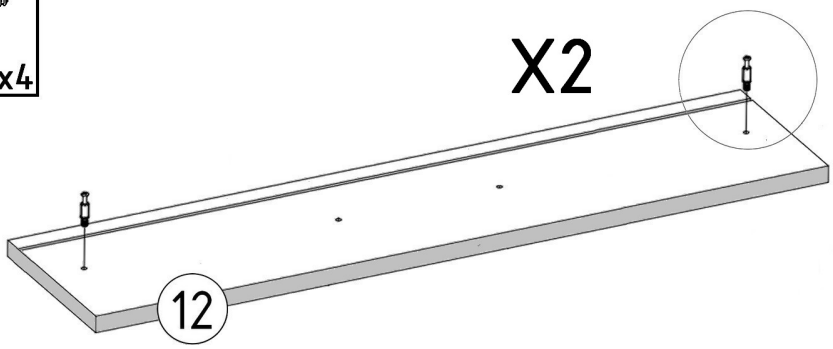

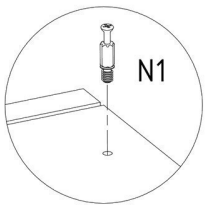

C



D



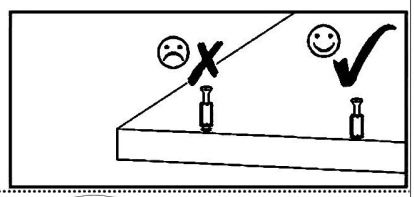

N1



L=35mm x4

R7

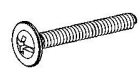

4x27mm x4

U6



L=208/160 x2

X2

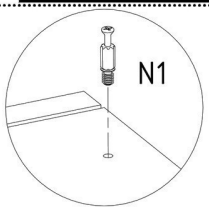

A



B



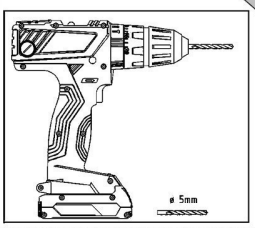

!

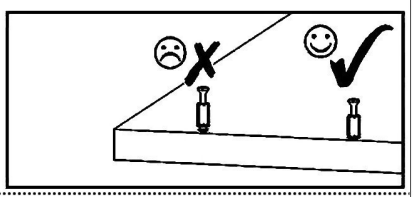

M1



12x15mm x4

X4

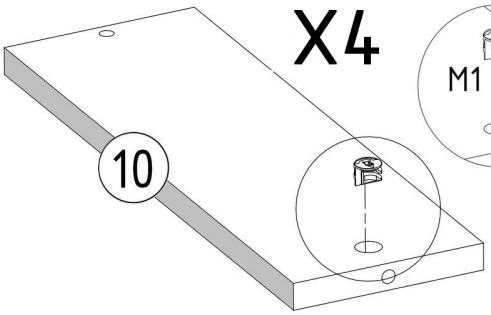

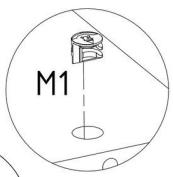

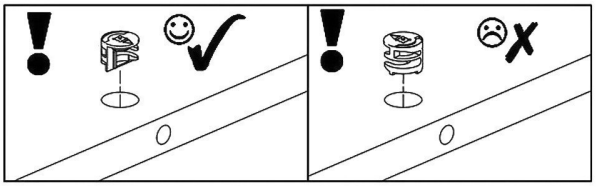

F1

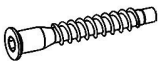

7x50mm x4

F3

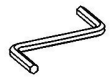

Hex 4mm

X2

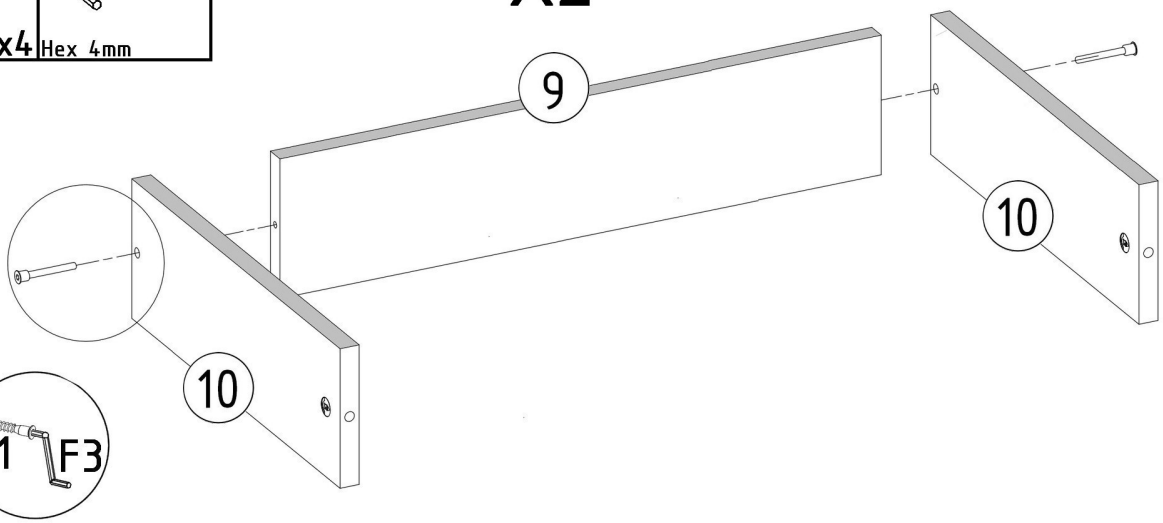

B1



ø17/4mm x4

X2

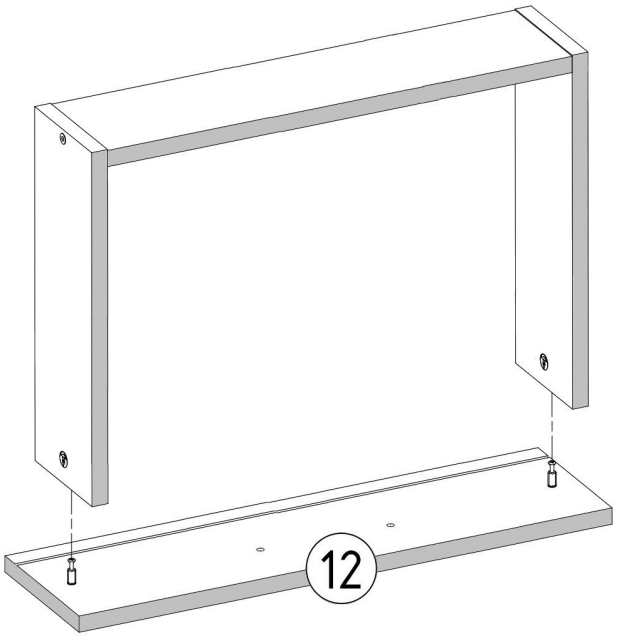

1.

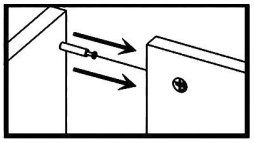

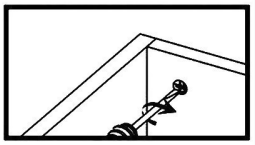

2.

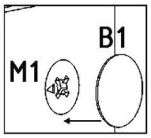

Z1



x10

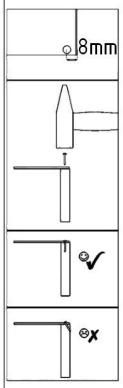

X2

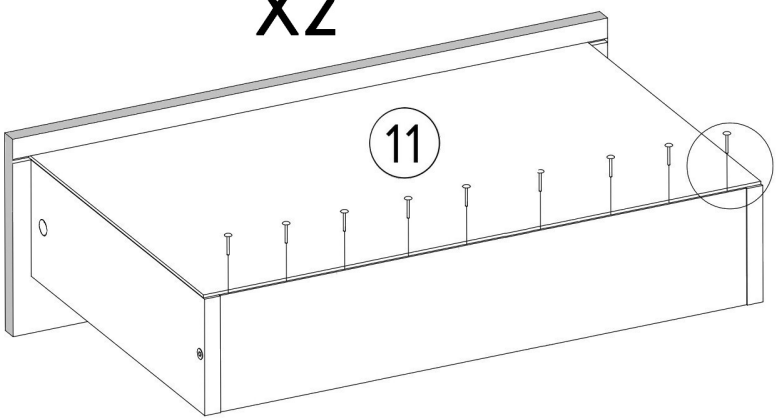

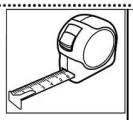

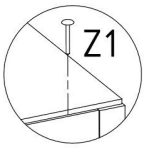

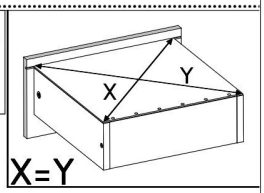

S1



3,5x16mm x8

P2

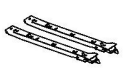

L=300mm x2

X2

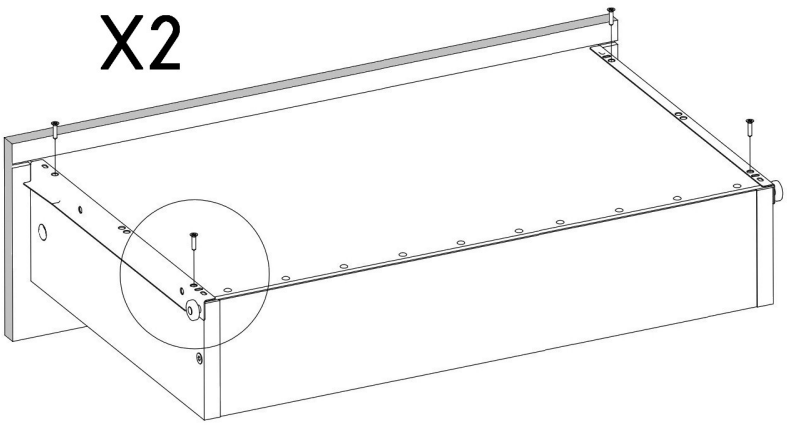

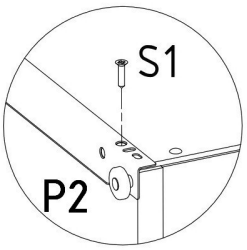

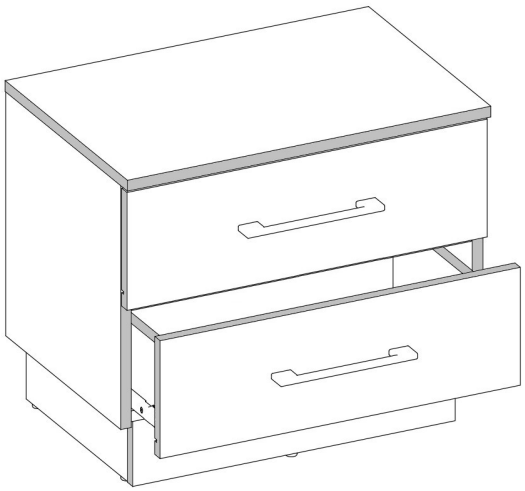

A

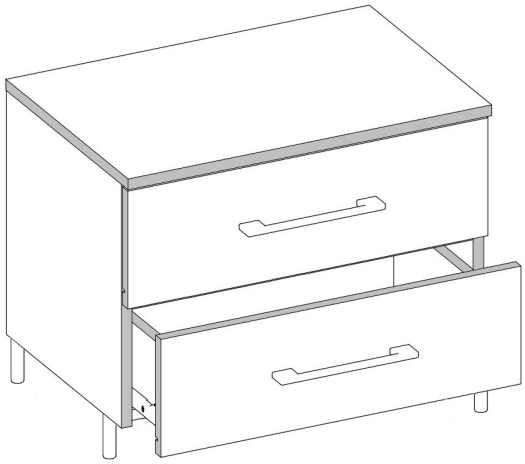

B

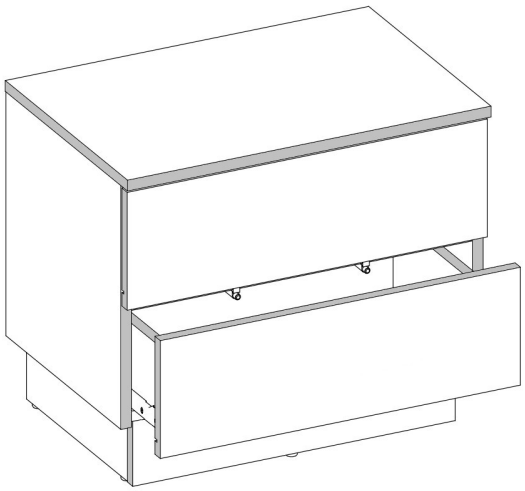

C

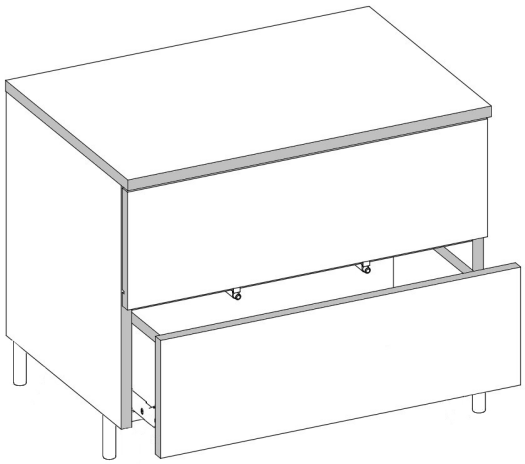

D