INSTRUKCJA MONTAŻU

Biurko 130 cm z 6 szufladami i półką na klawiaturę

Kolor: Glina

Kod produktu: OR10365



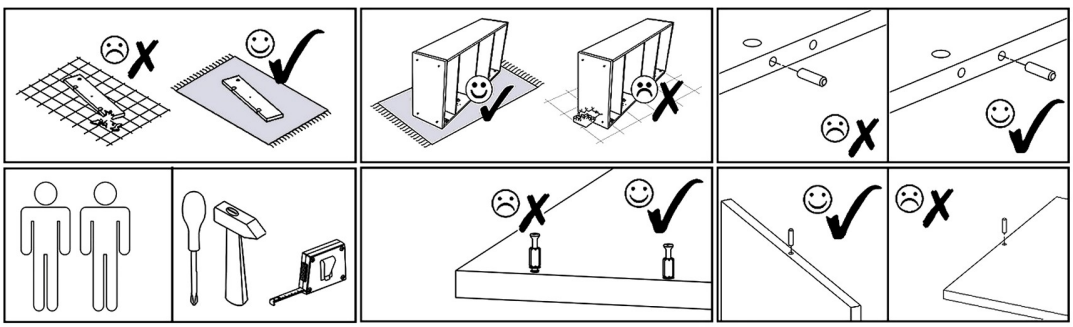

N1  L=35mm x44	M1  12x15mm x44	Z2 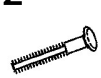 x24	S1  3,5x16mm x28	E1  8x30mm x56	F3 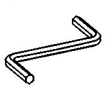 Hex 4mm x1	
T1  x8	Z1  x100	P2 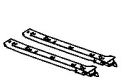 L=300mm x1	P4 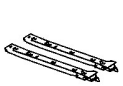 L=400mm x6	R1  6x8mm x28	F1 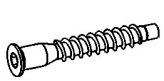 7x50mm x4	B  ø17/4mm x12

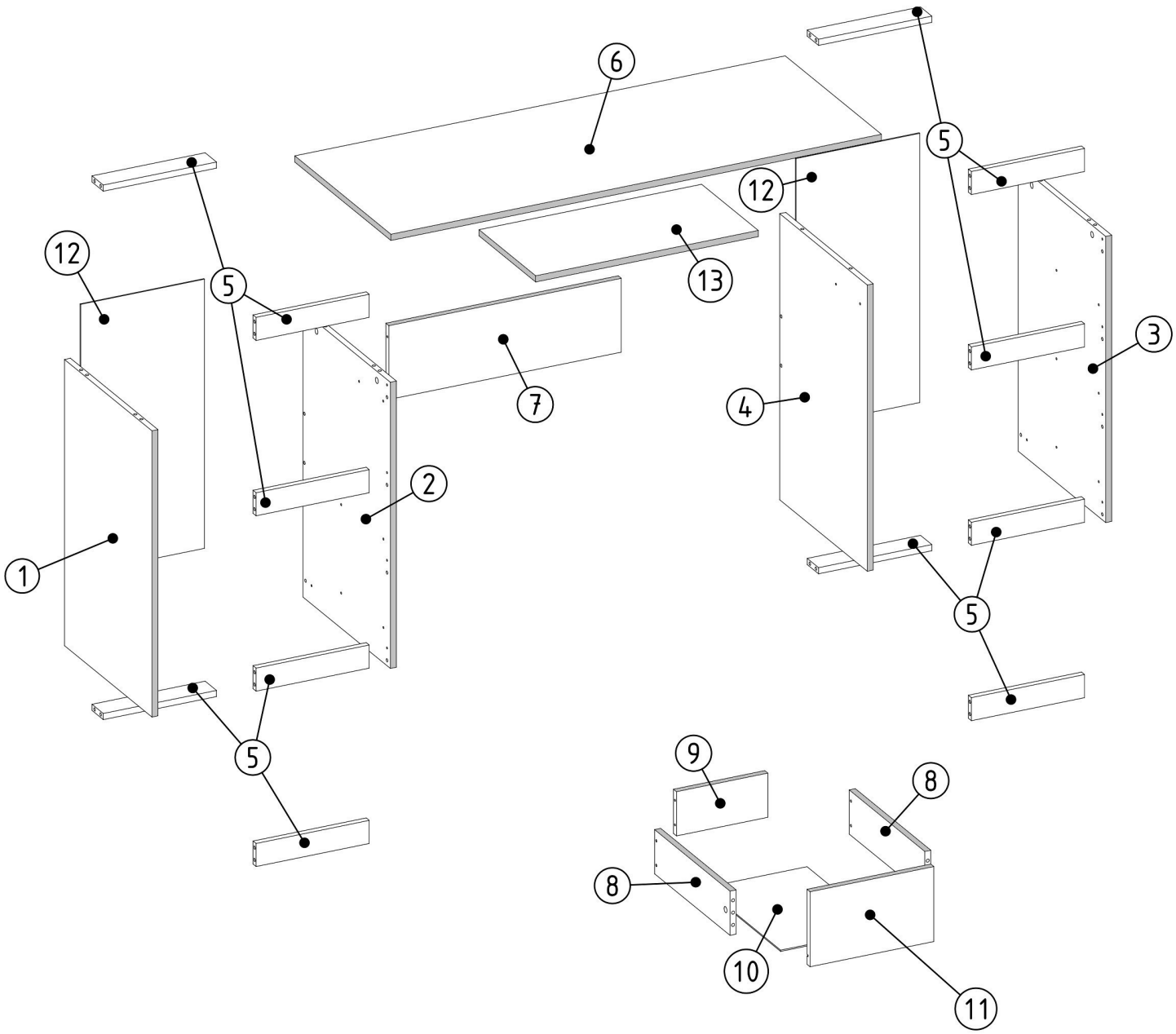

000119	13	1
000345	12	2
000043	11	6
000020	10	6
000006	9	6
000082	8	12
000133	7	1
000344	6	1
000030	5	12
000184	4	1
000183	3	1
000185	2	1
000182	1	1
ID	NUMBER	QUANTITY

N1	M1	R1	P4
L=35mm x6	12x15mm x2	6x8mm x6	L=400mm x3

E1	T1
8x30mm x2	x2

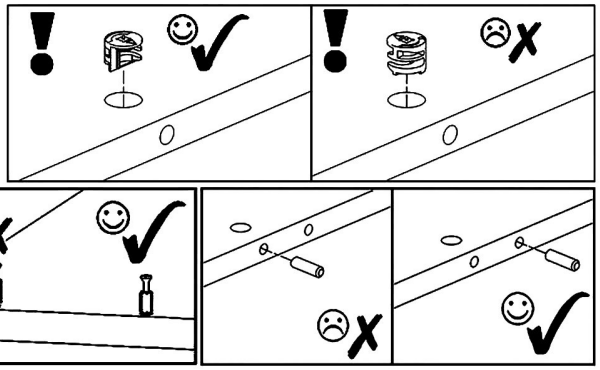

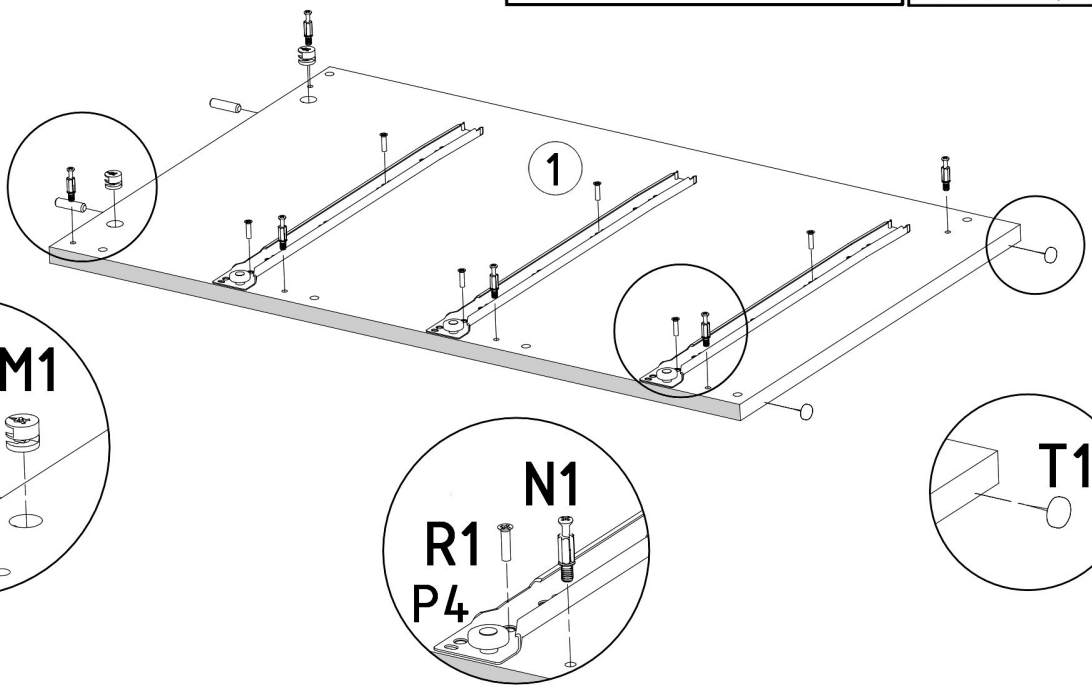

N1	M1	P4	R1
L=35mm x6	12x15mm x2	L=400mm x3	6x8mm x6

E1	T1
8x30mm x2	x2

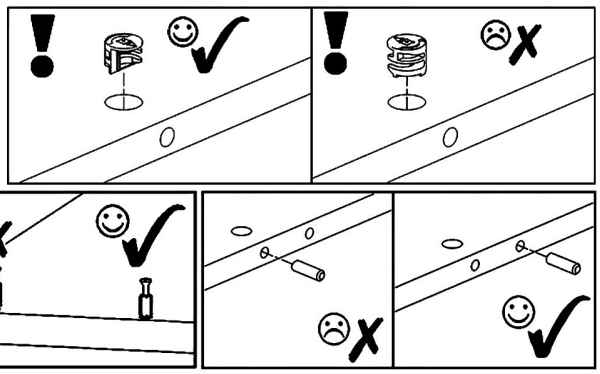

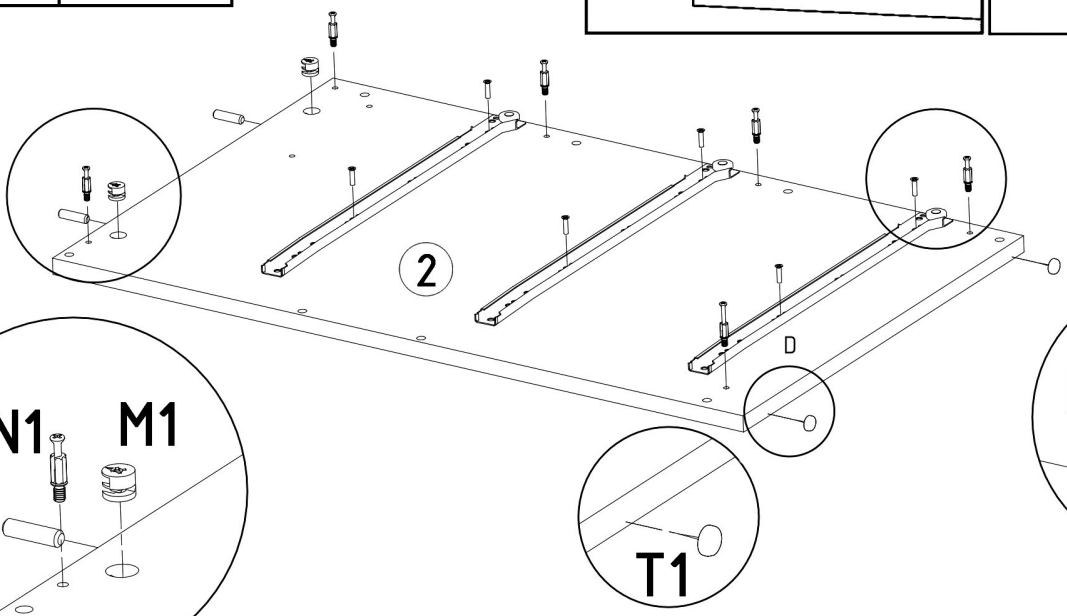

N1	M1	P4	R1
L=35mm x6	12x15mm x2	L=400mm x3	6x8mm x6

E1	T1
8x30mm x2	x2

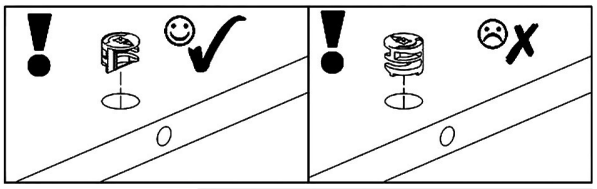

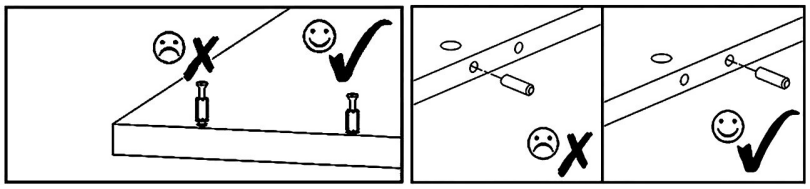

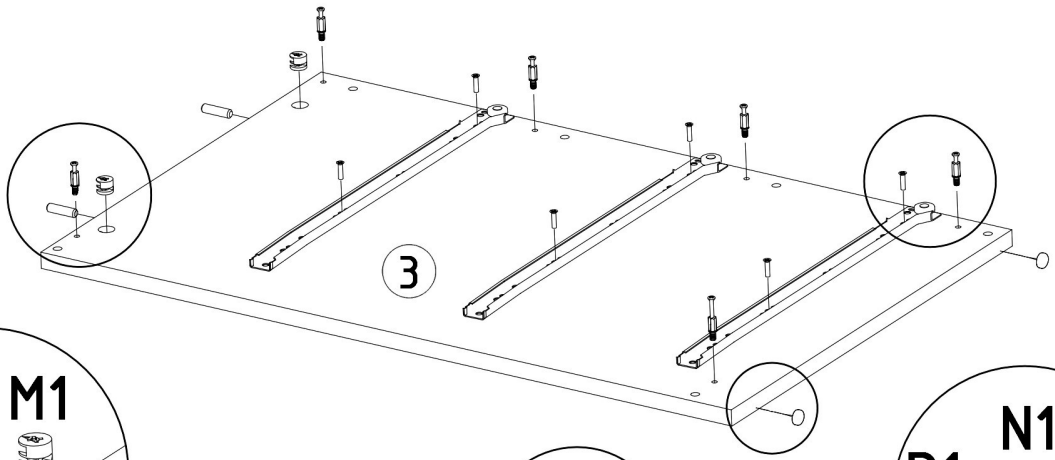

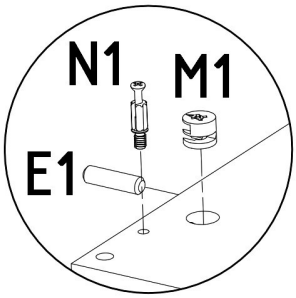

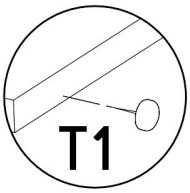

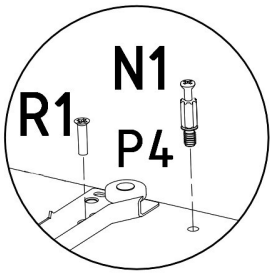

N1	M1	P4	R1
L=35mm x6	12x15mm x2	L=400mm x3	6x8mm x6

E1	T1
8x30mm x2	x2

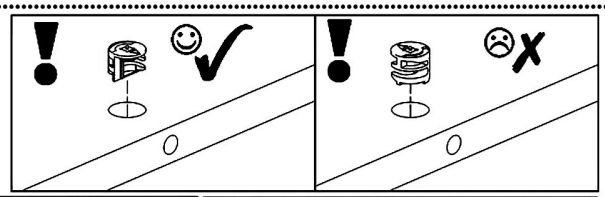

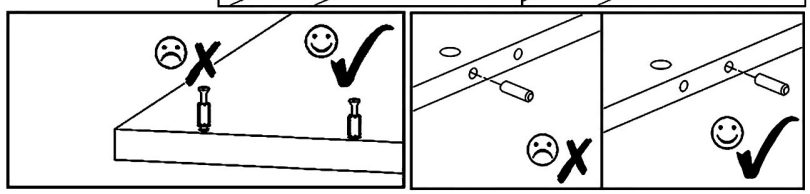

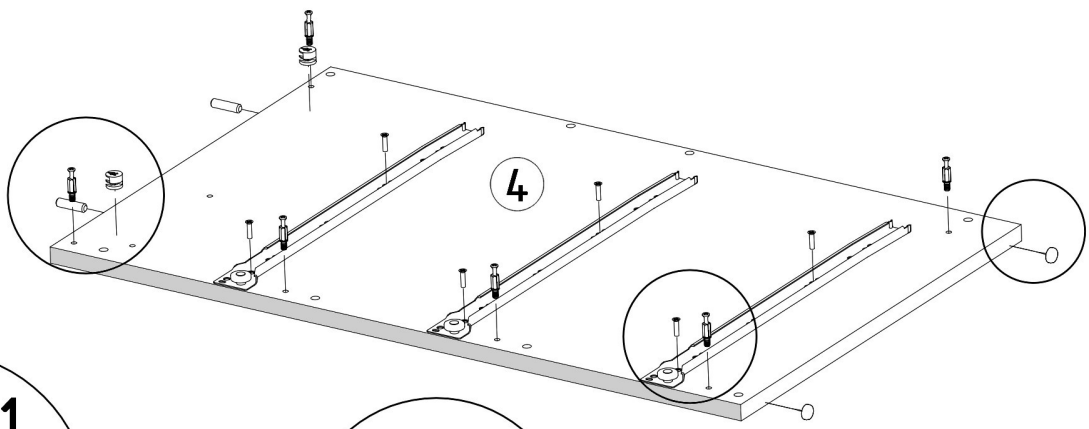

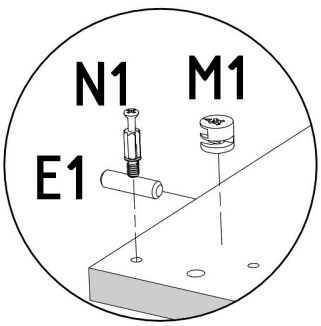

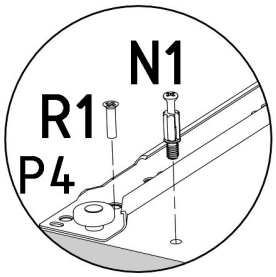

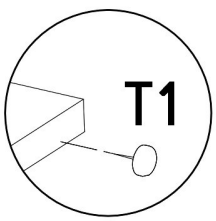

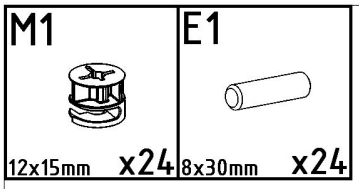

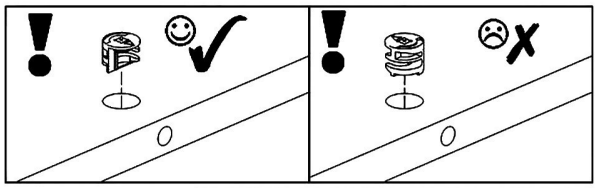

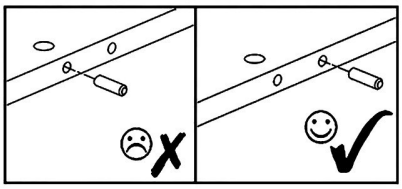

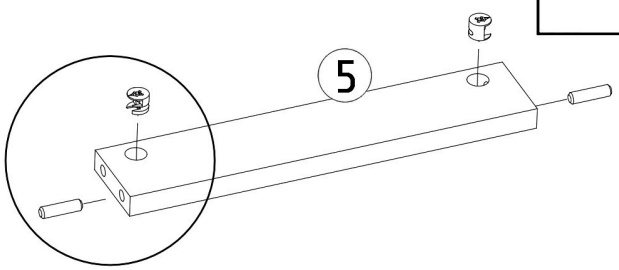

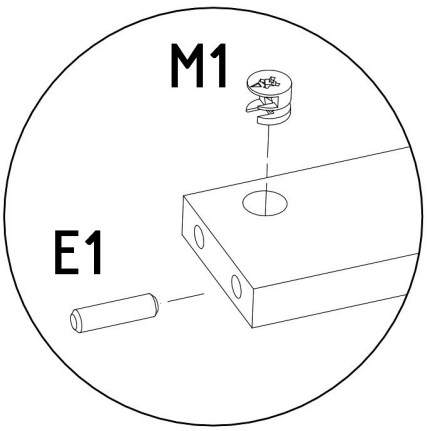

x12

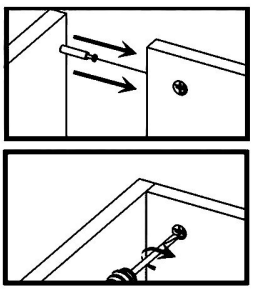

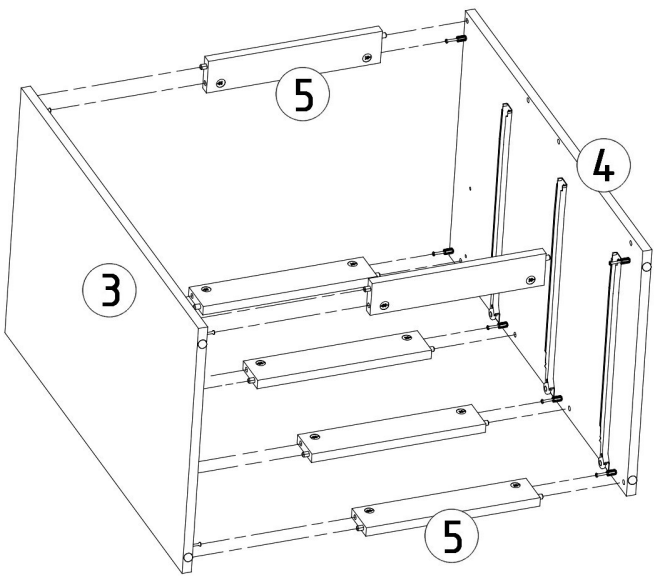

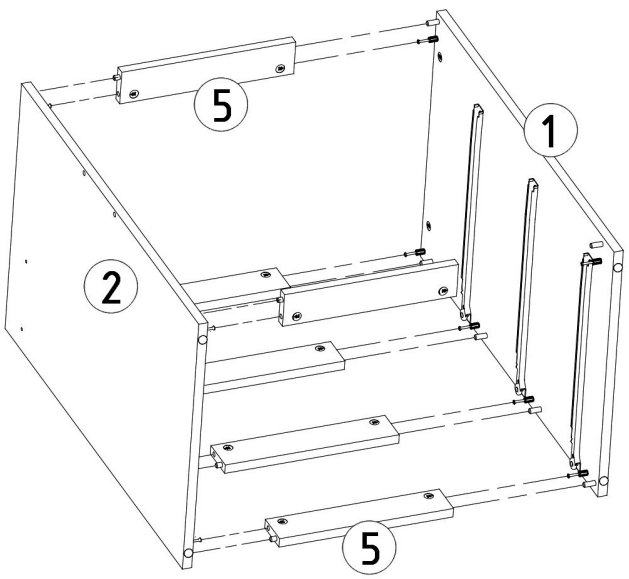

F1



7x50mm x4

F3

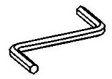

Hex 4mm x1

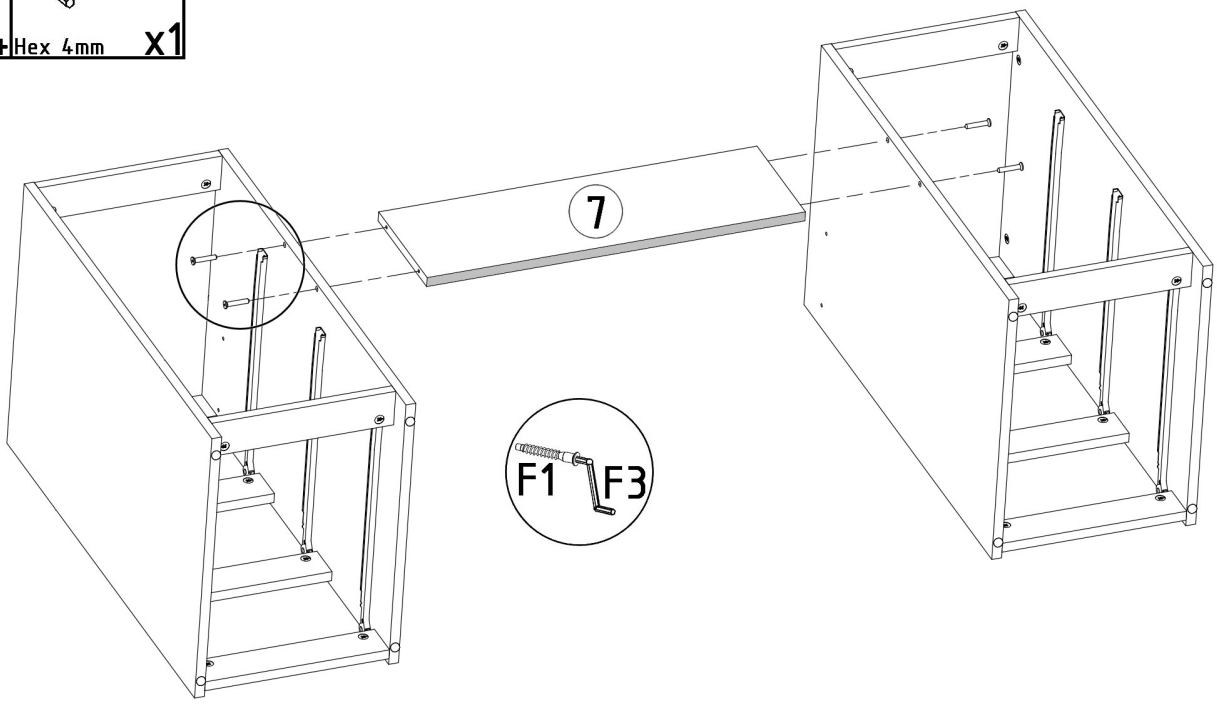

N1



L=35mm x8

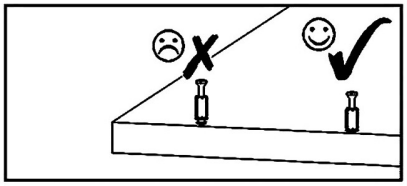

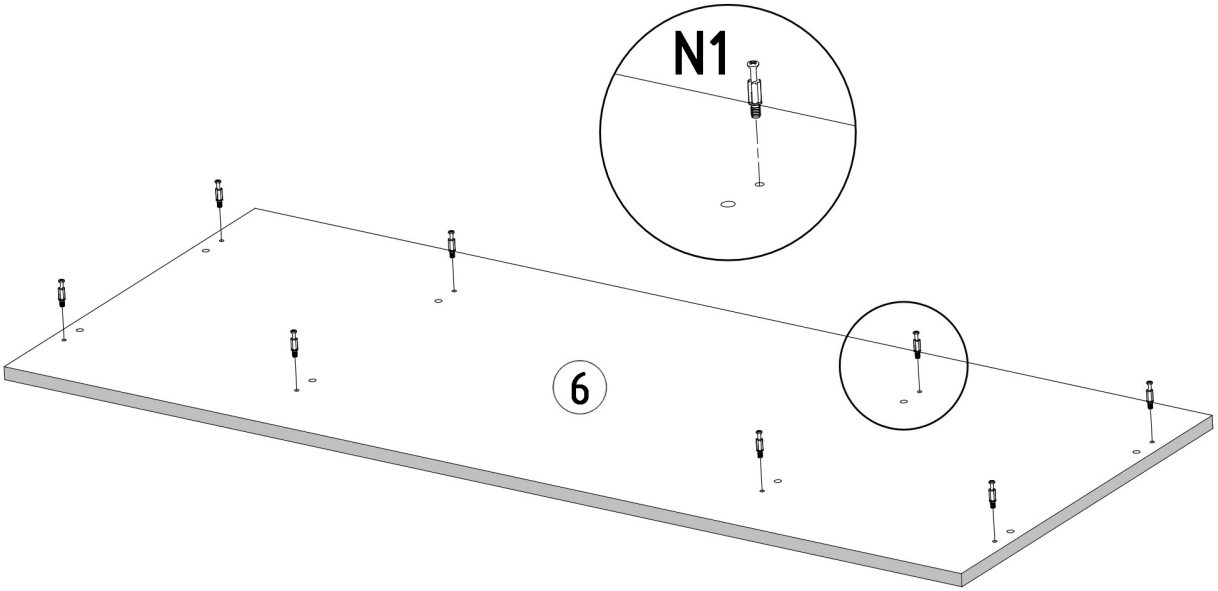

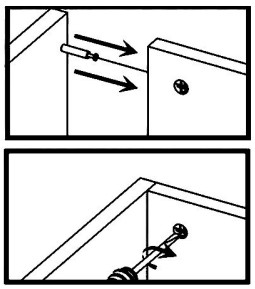

6

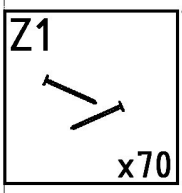
Z1
x70

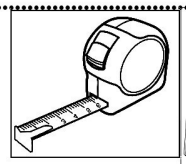

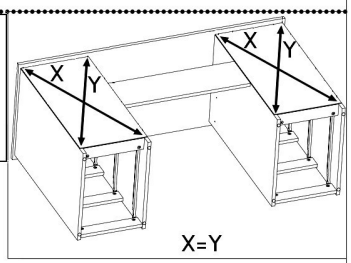
X
Y
X
Y
X=Y


Z1

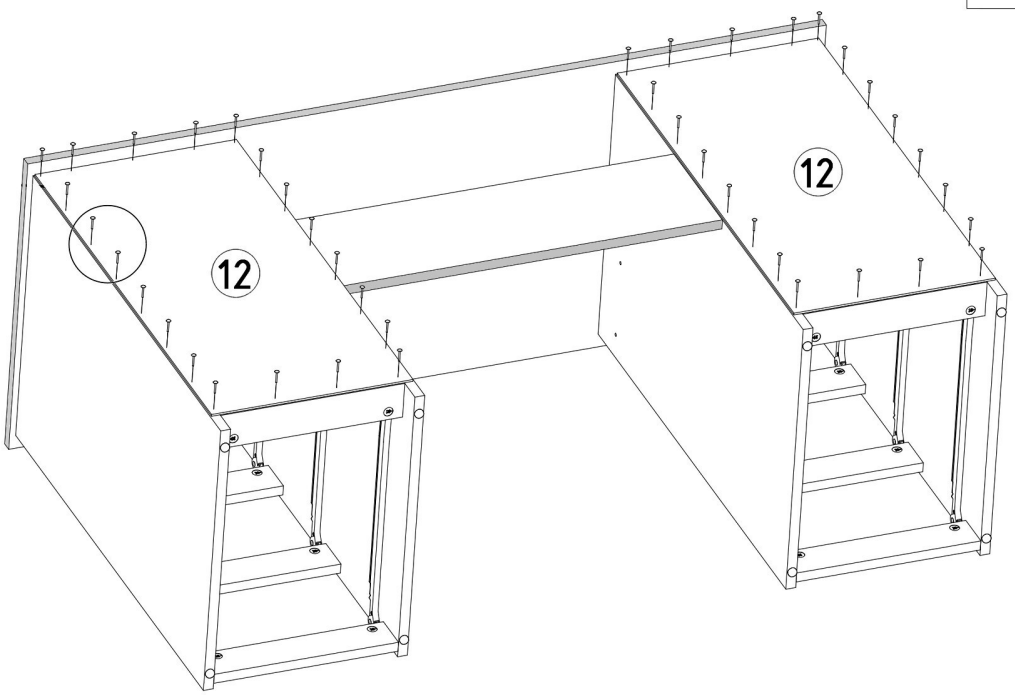
12
12

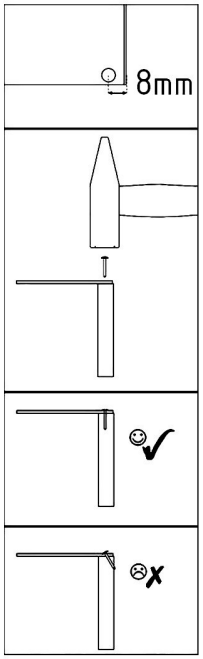
8mm

M1	Z2	E1
		
12x15mm x12	x24	8x30mm x24

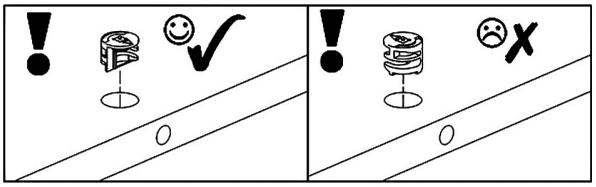

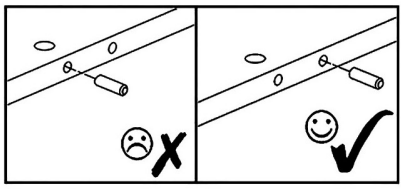

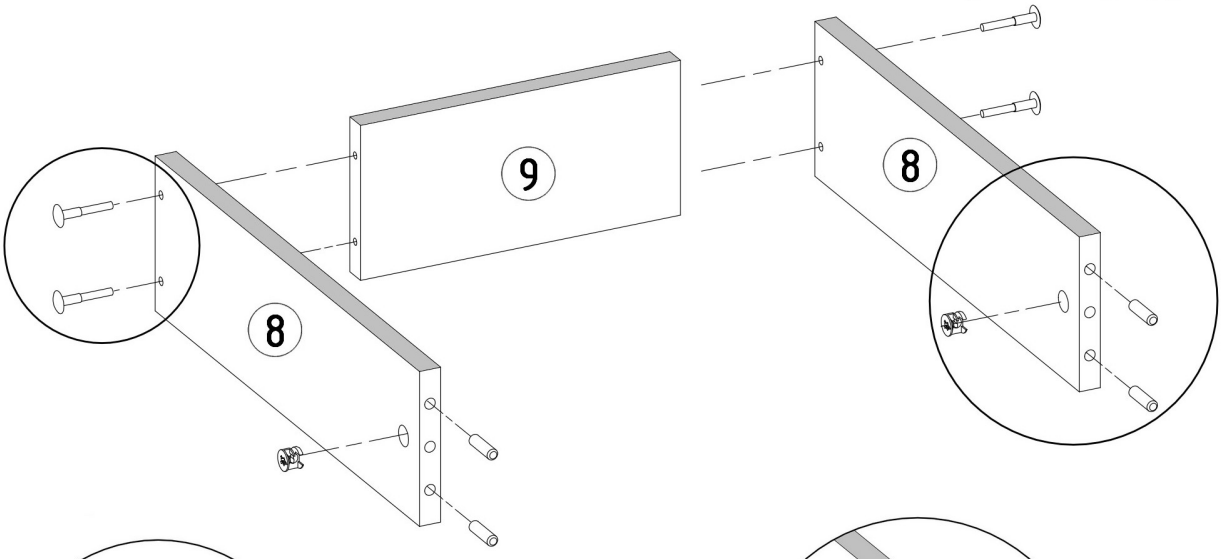

x6

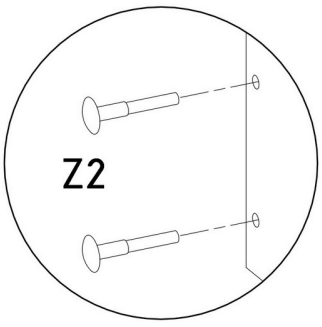

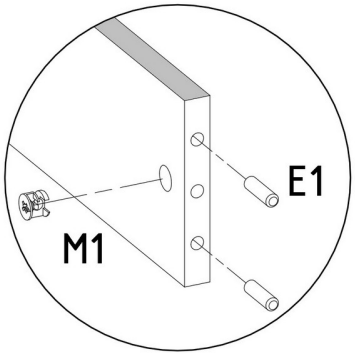

N1

L=35mm x12

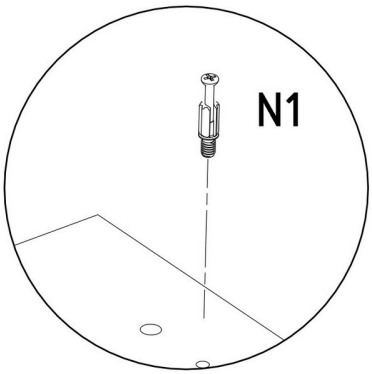

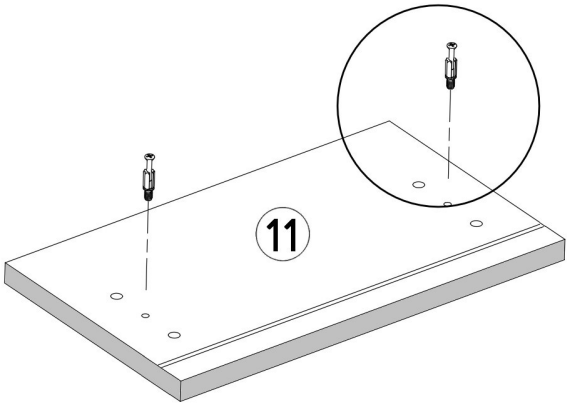

x6

B1

ø17/4mm x12

1.

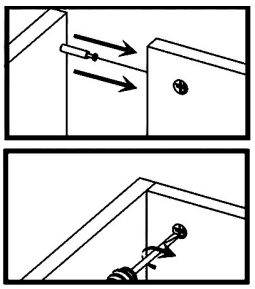

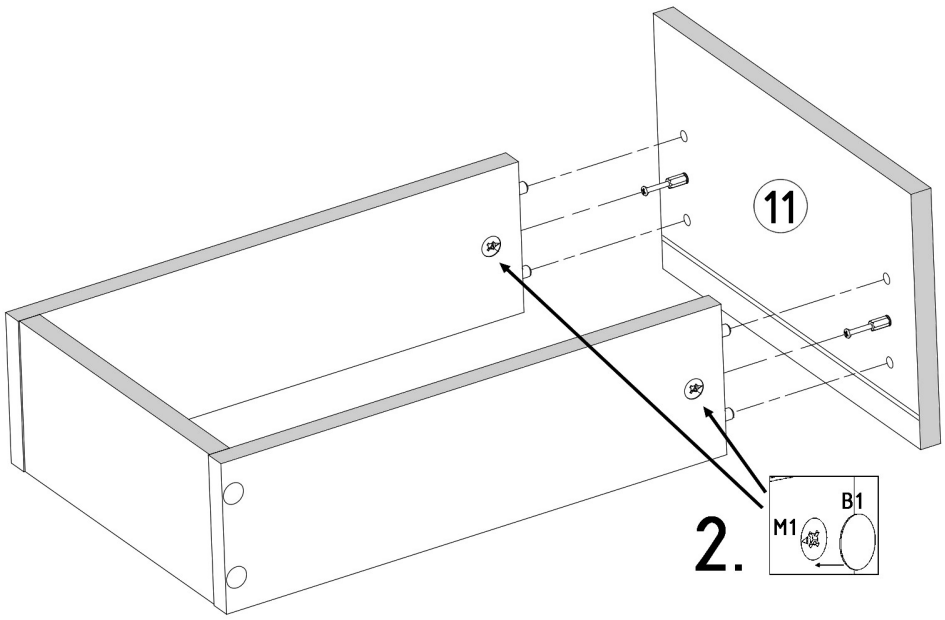

Z1

x30

S1

3,5x16mm x24

P4

L=400mm x6

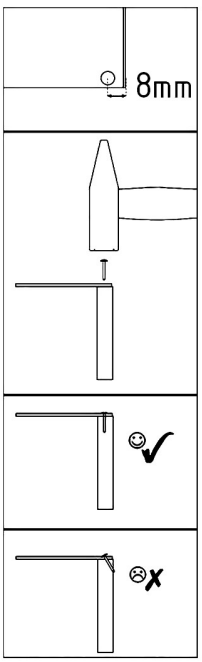

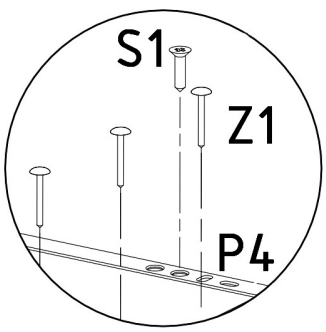

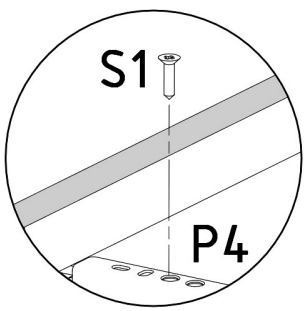

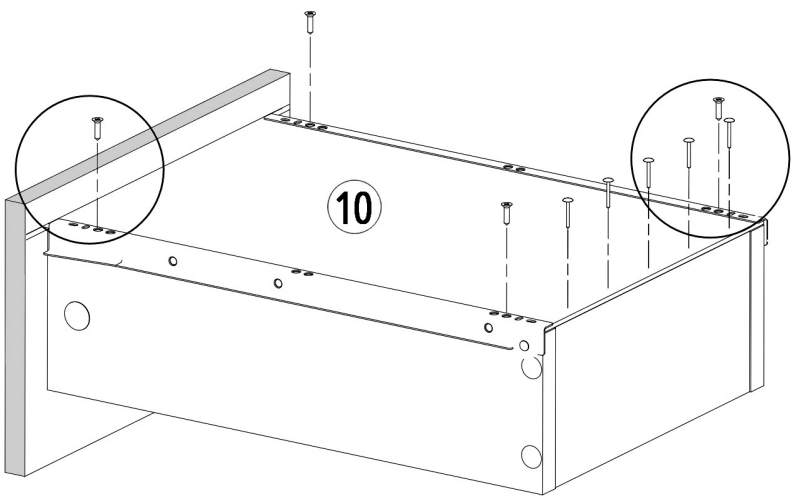

x6

R1	P2
	
6x8mm x4	L=300mm x1

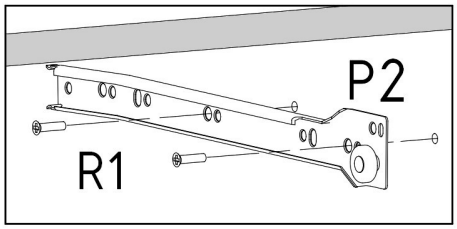

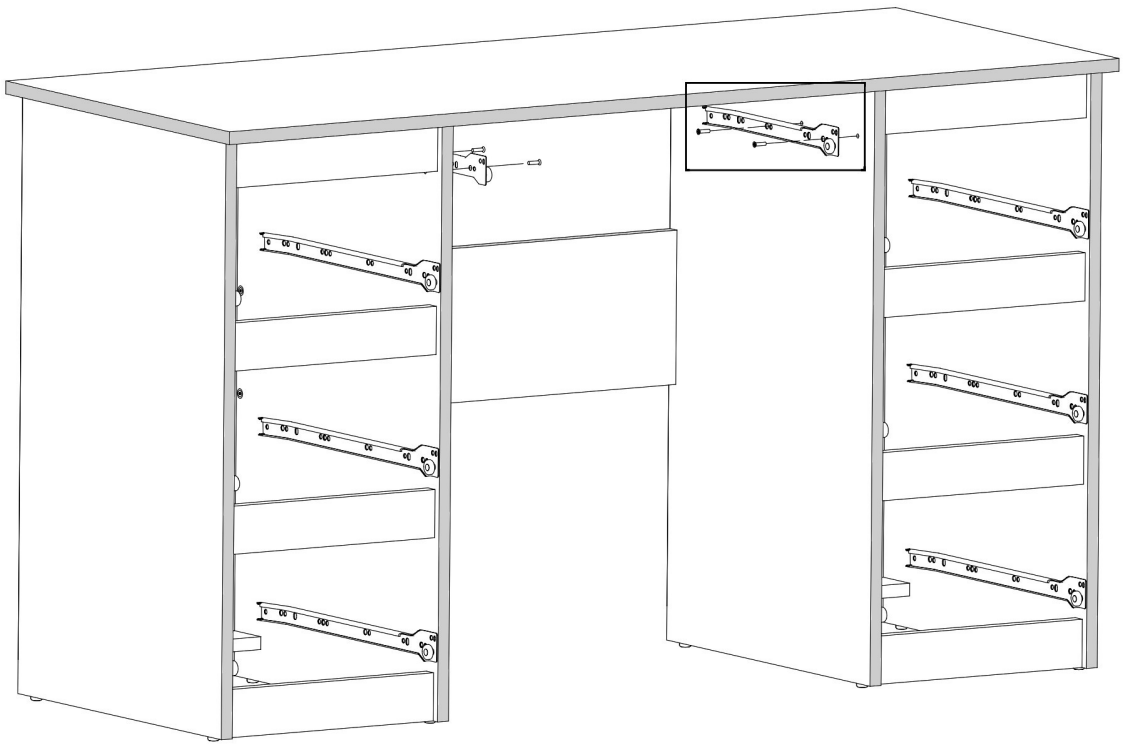

S1	P2
	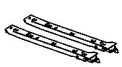
3,5x16mm x4	L=300mm x1

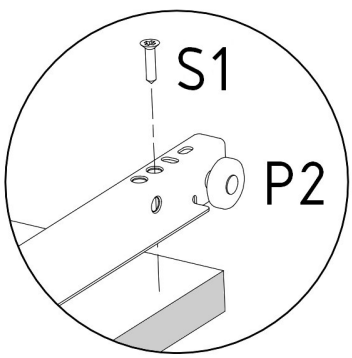

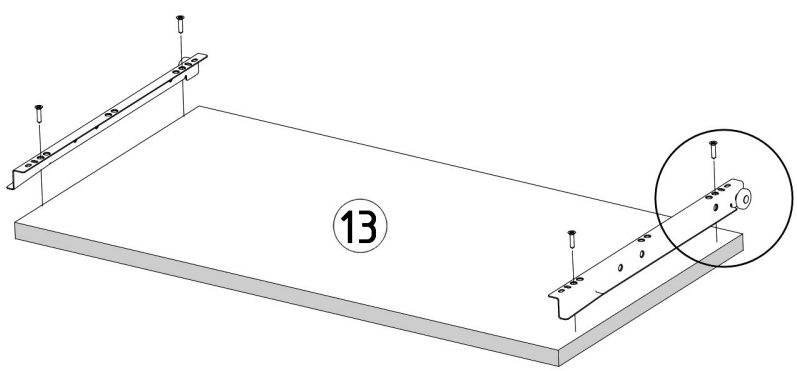

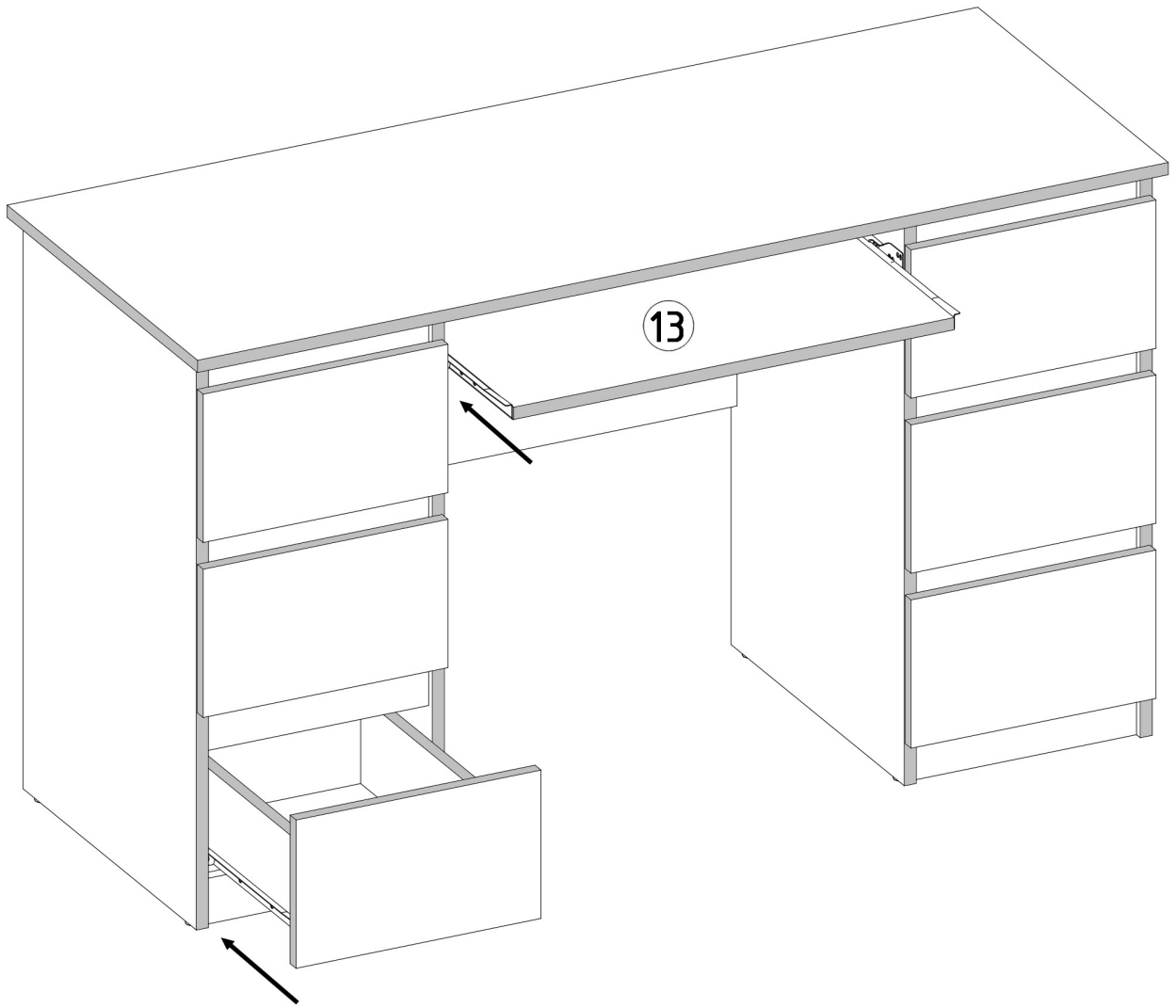
13