INSTRUKCJA MONTAŻU

Szafa przesuwna 160 cm z gładkimi drzwiami

Kolor: Biały

Kod produktu: OR10160

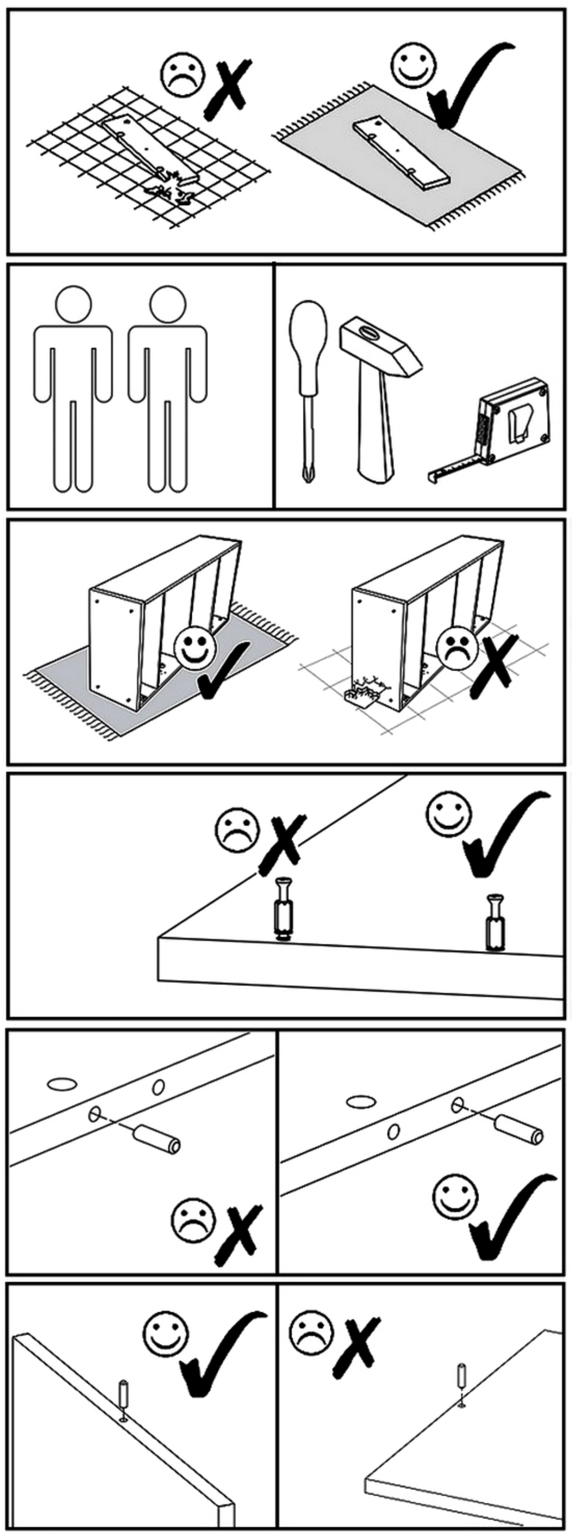

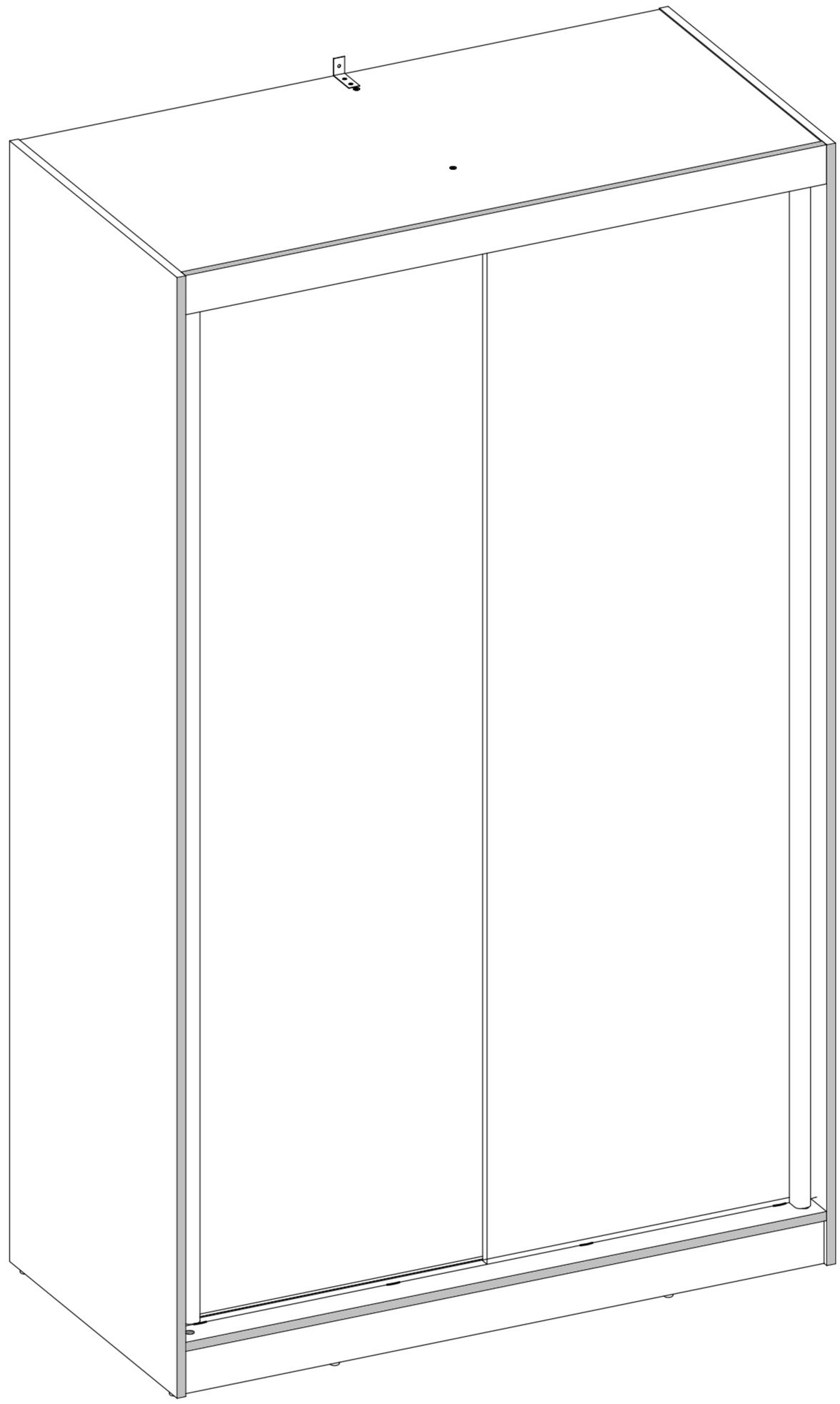

A7	A8	U7	K12	K11	U5
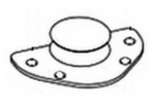	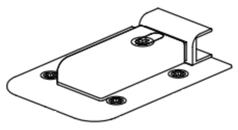	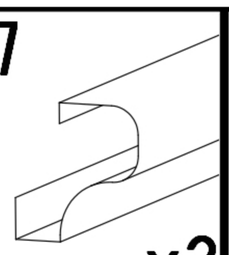	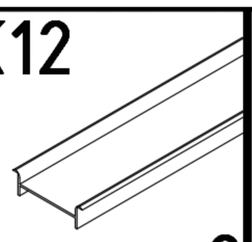	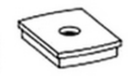	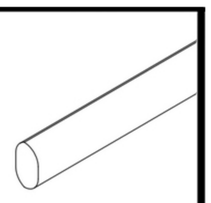
x4	x4	L=1862mm x2	L=1564mm x2	x8	L=765mm x1

K9	K4	L2	S6	K1	V7	T4
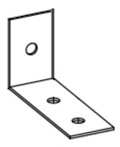					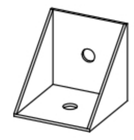	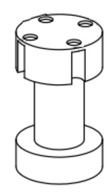
x1	x16	L=768mm x4	2,5x20 x16	x1	x2	x1

N1	M1	M2	S1	E1	E3	K10
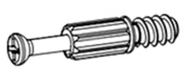	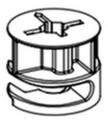	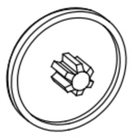			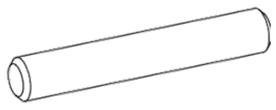	
L=35mm x24	12x15mm x28	x20 ø16mm B,S-A x10	3,5x16mm x20	8x30mm x24	8x50mm x2	x2

Z1	F1	K7	F3	S10	N4	T1
	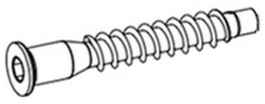	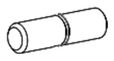	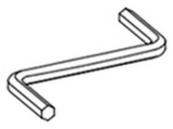	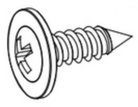	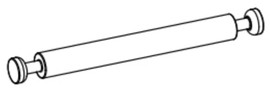	
x150	7x50mm x4	5x16mm x8	x1	4x15 mm x24	L=62mm x2	x6

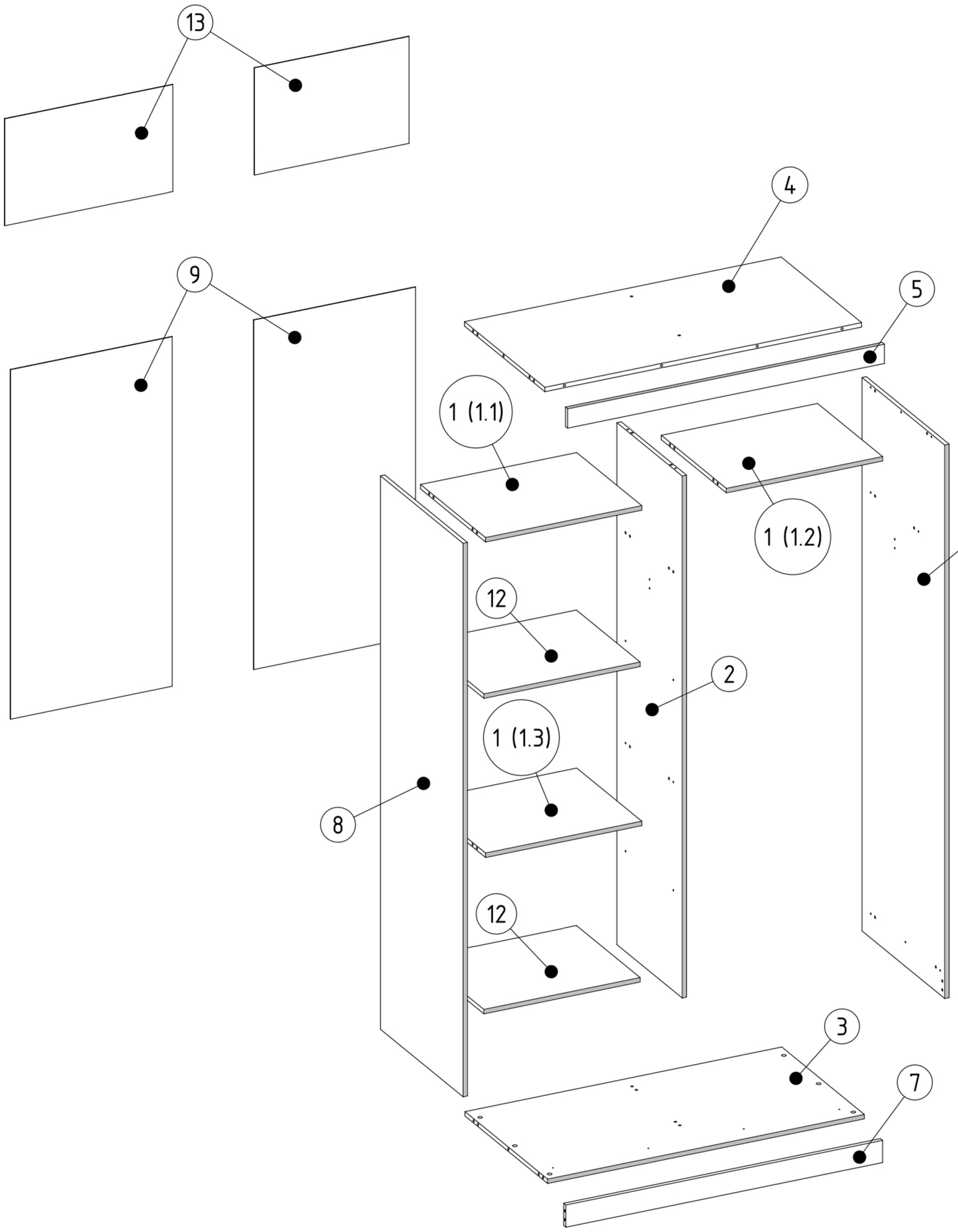

1	x	3
2	x	1
3	x	1
4	x	1
5	x	1
6	x	1

7	x	1
8	x	1
9	x	2
10	x	1
11	x	1
12	x	2
13	x	2

M1	E1	E3
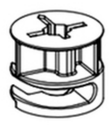	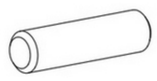	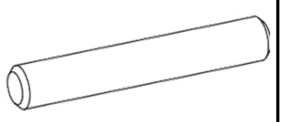
12x15mm x4	8x30mm x2	8x50mm x2

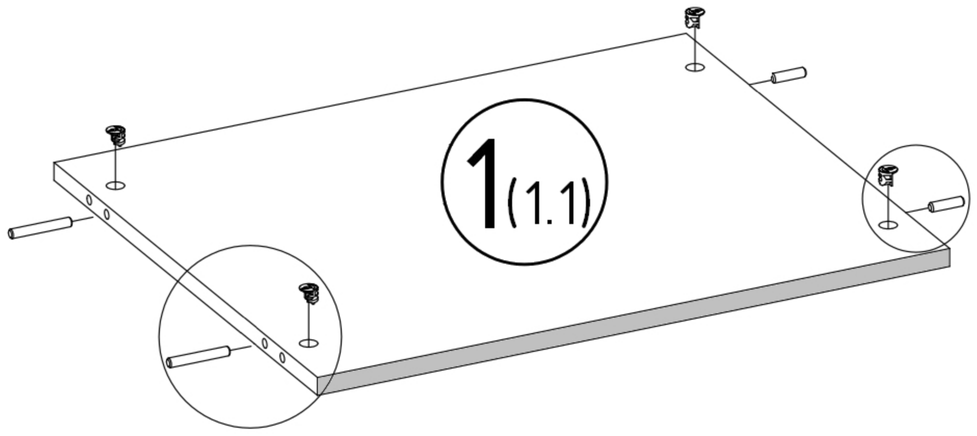



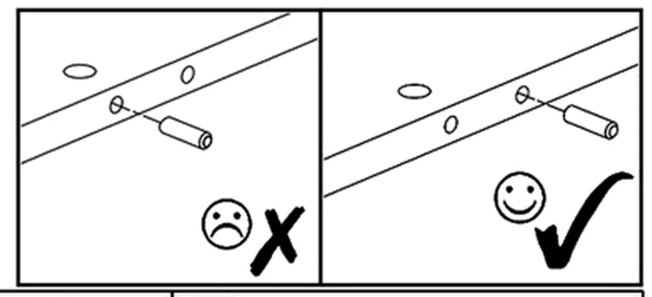

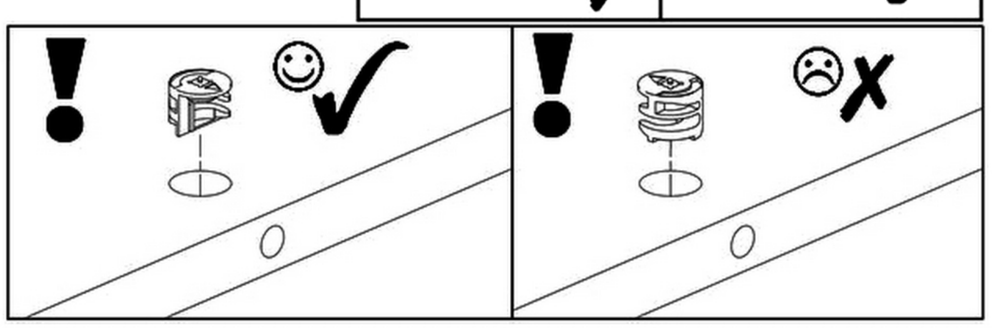

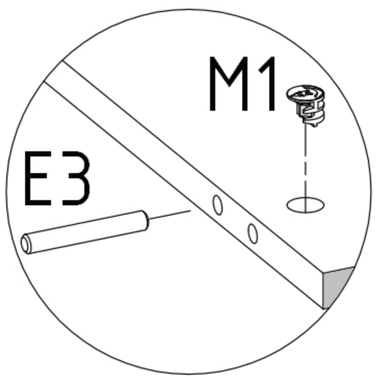

M1	E1
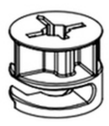	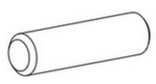
12x15mm x4	8x30mm x2

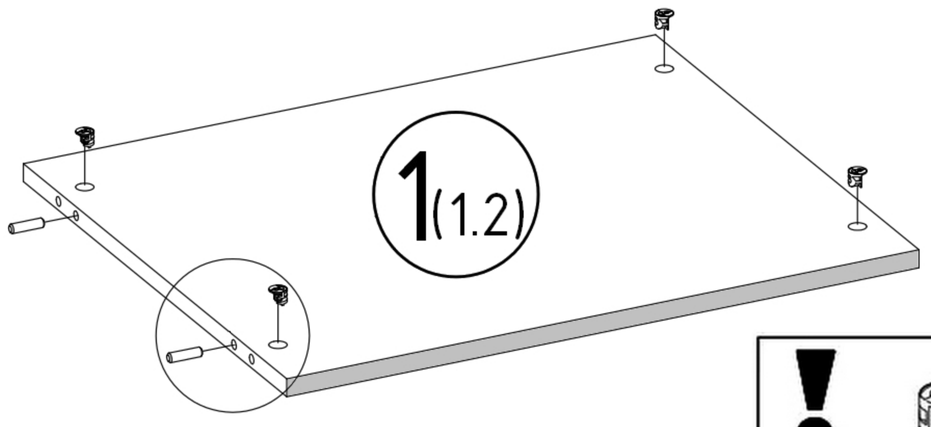

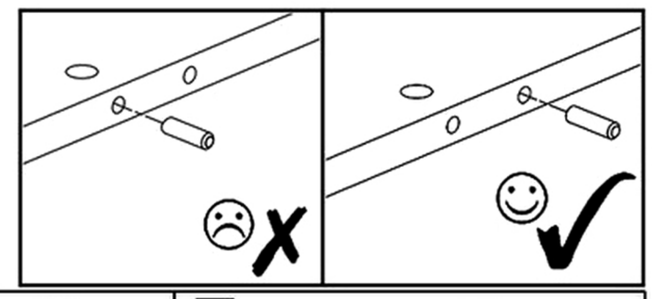

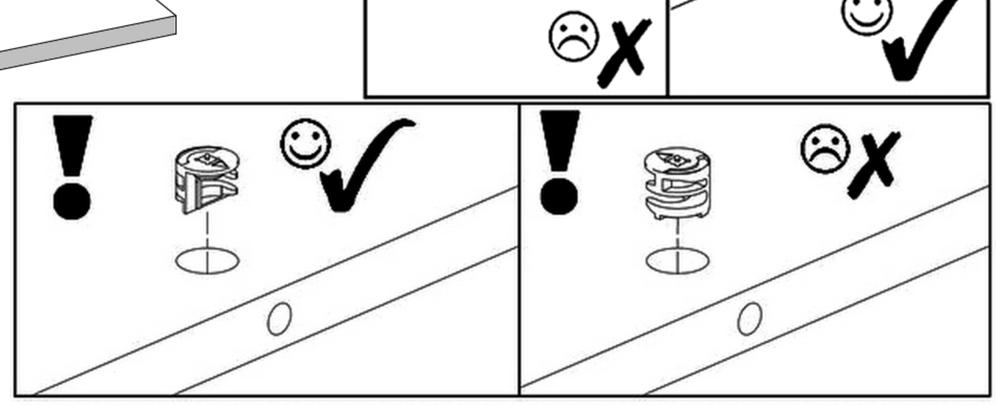

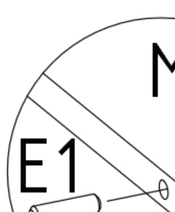

M1	E1
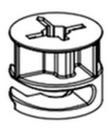	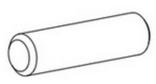
12x15mm x4	8x30mm x4

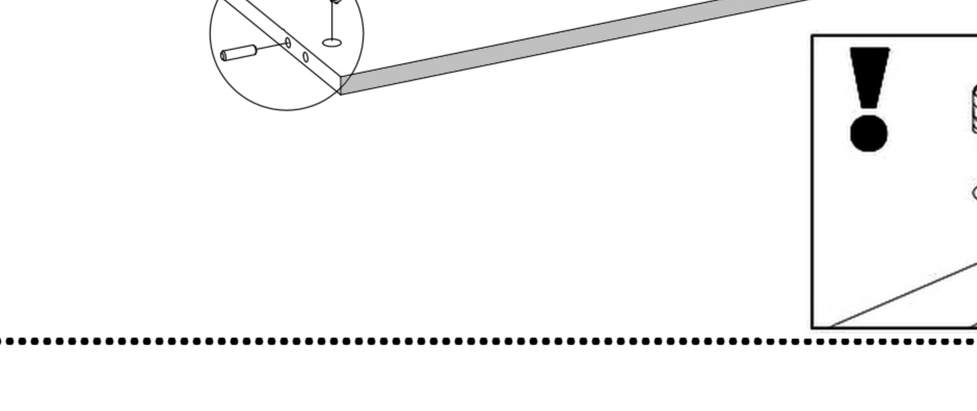

N1	K7	E1
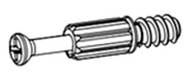	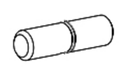	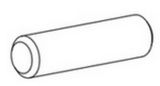
L=35mm x2	5x16mm x4	8x30mm x4

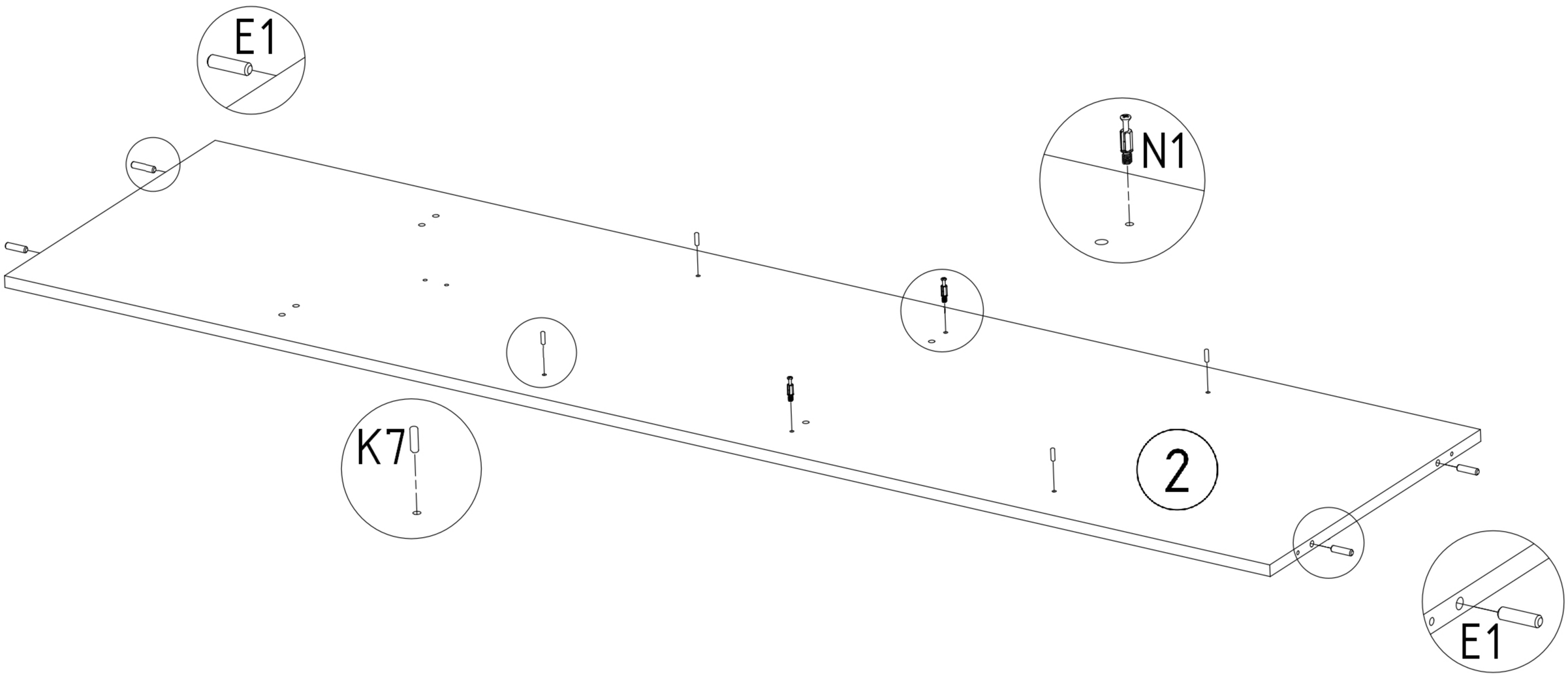

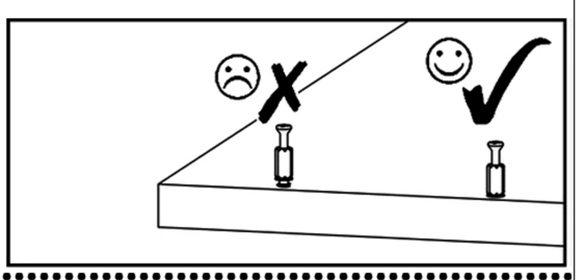

S1	K10
	
3,5x16mm x1	x1

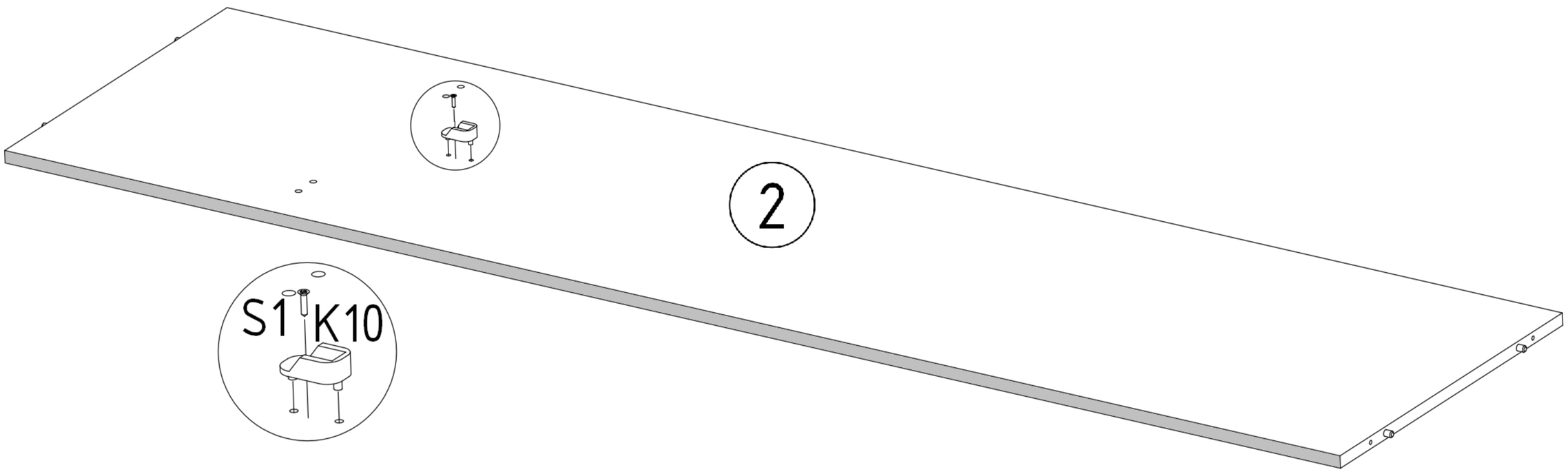

N4 x2

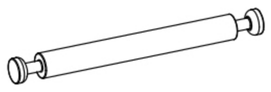

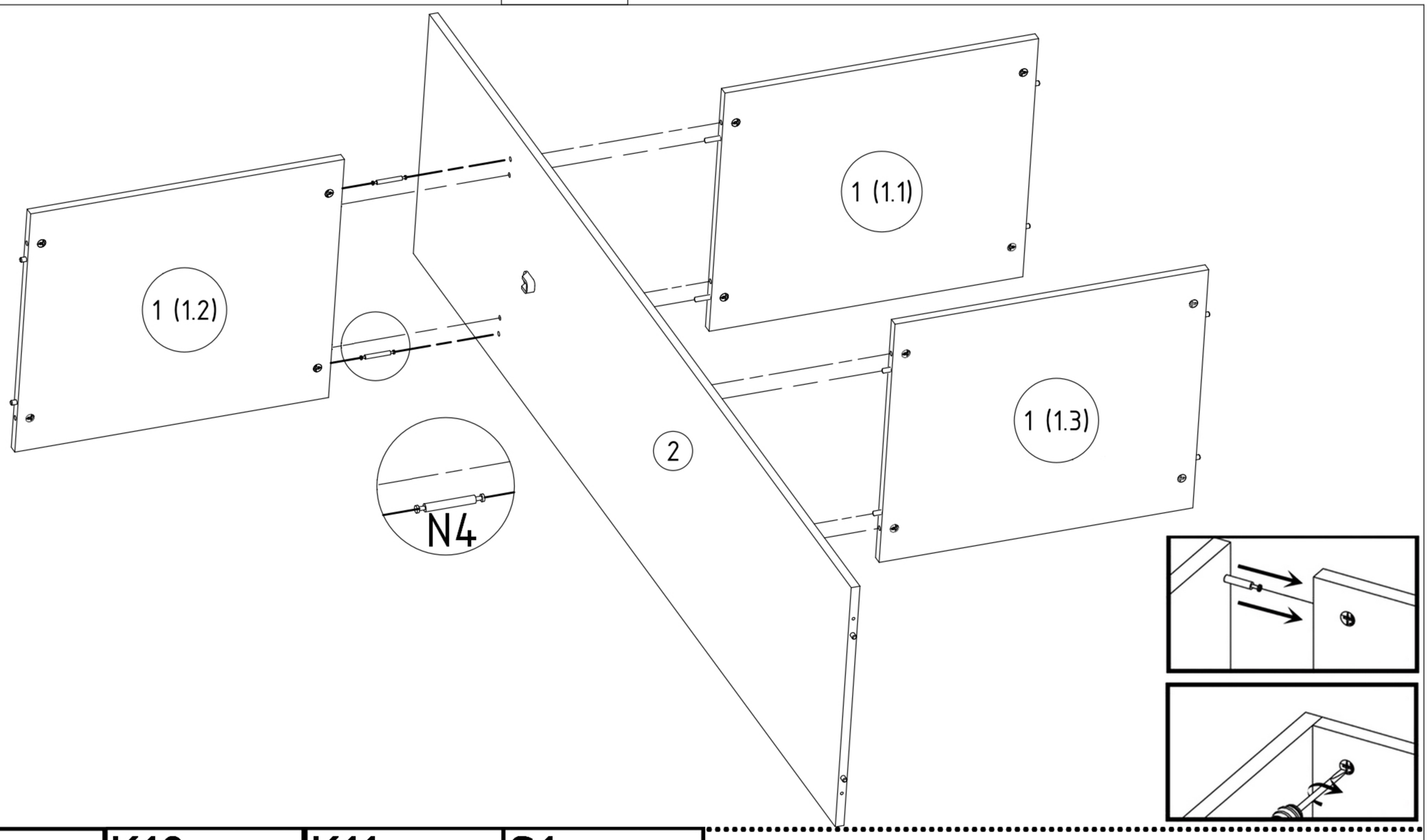

M1 12x15mm x6

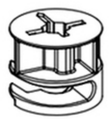

E1 8x30mm x4

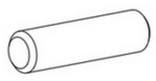

K12 x1

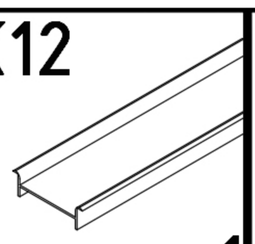

K11 x4

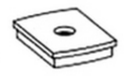

S1 3,5x16mm x4



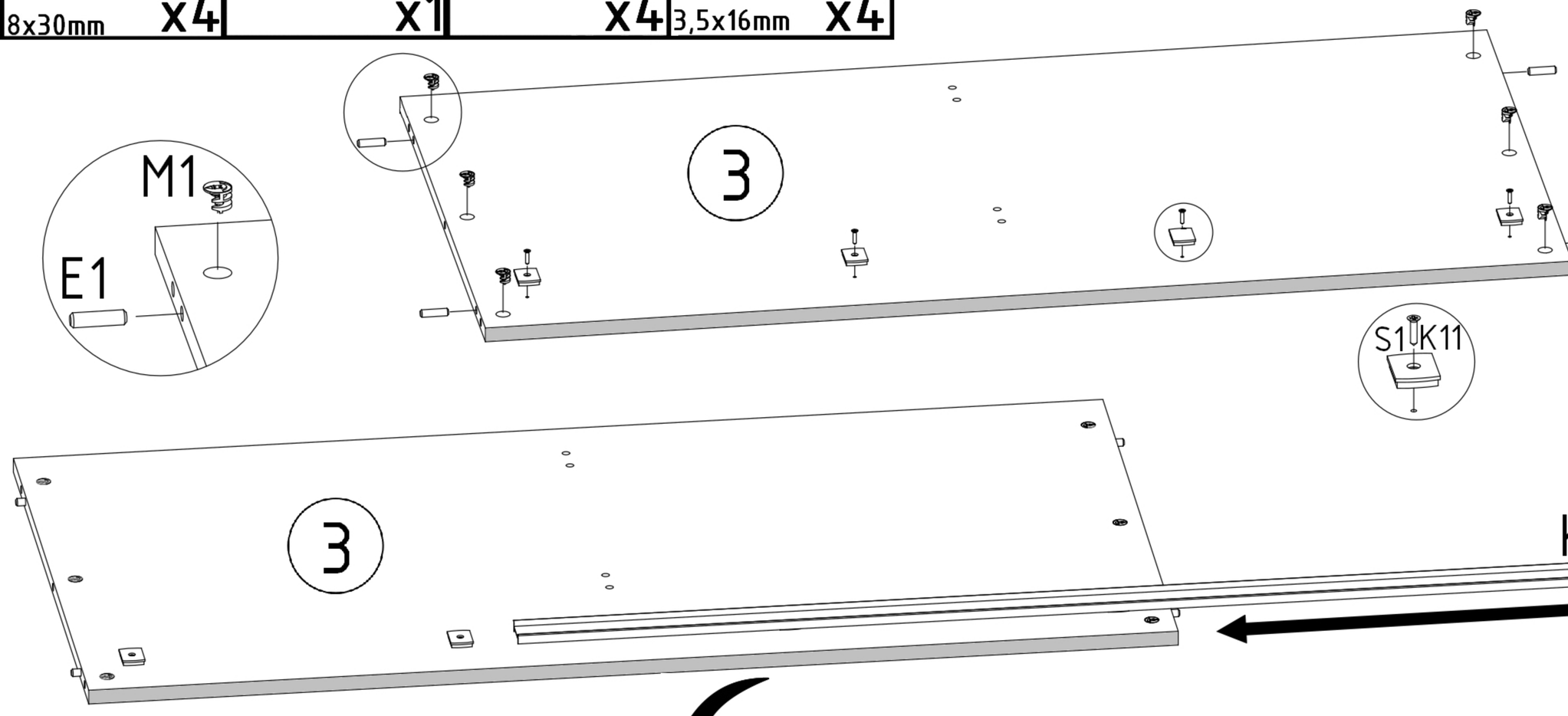

S1 3,5x16mm x4



T4 x1

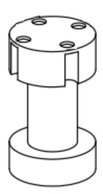

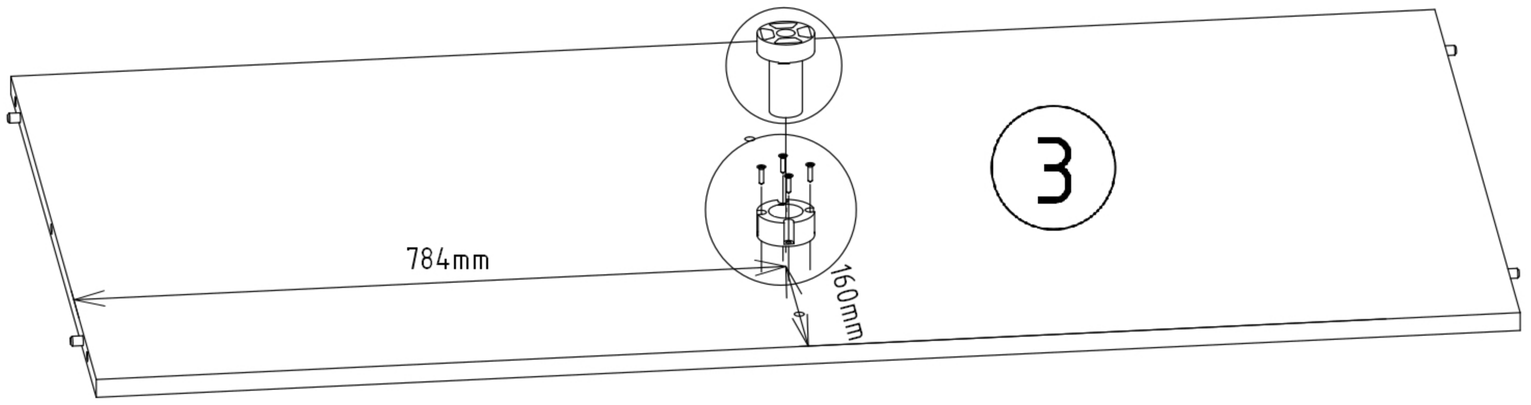

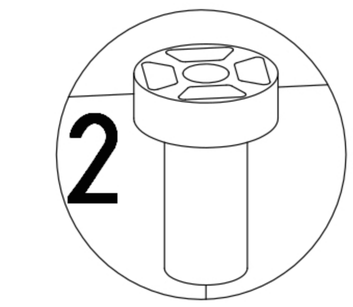

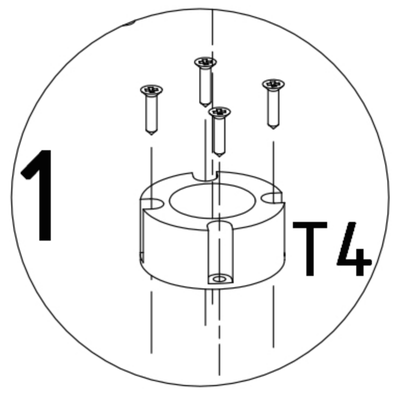

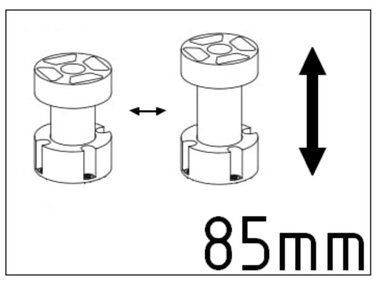

F1	F3
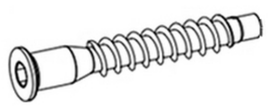 7x50mm x2	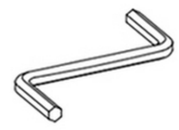 x1

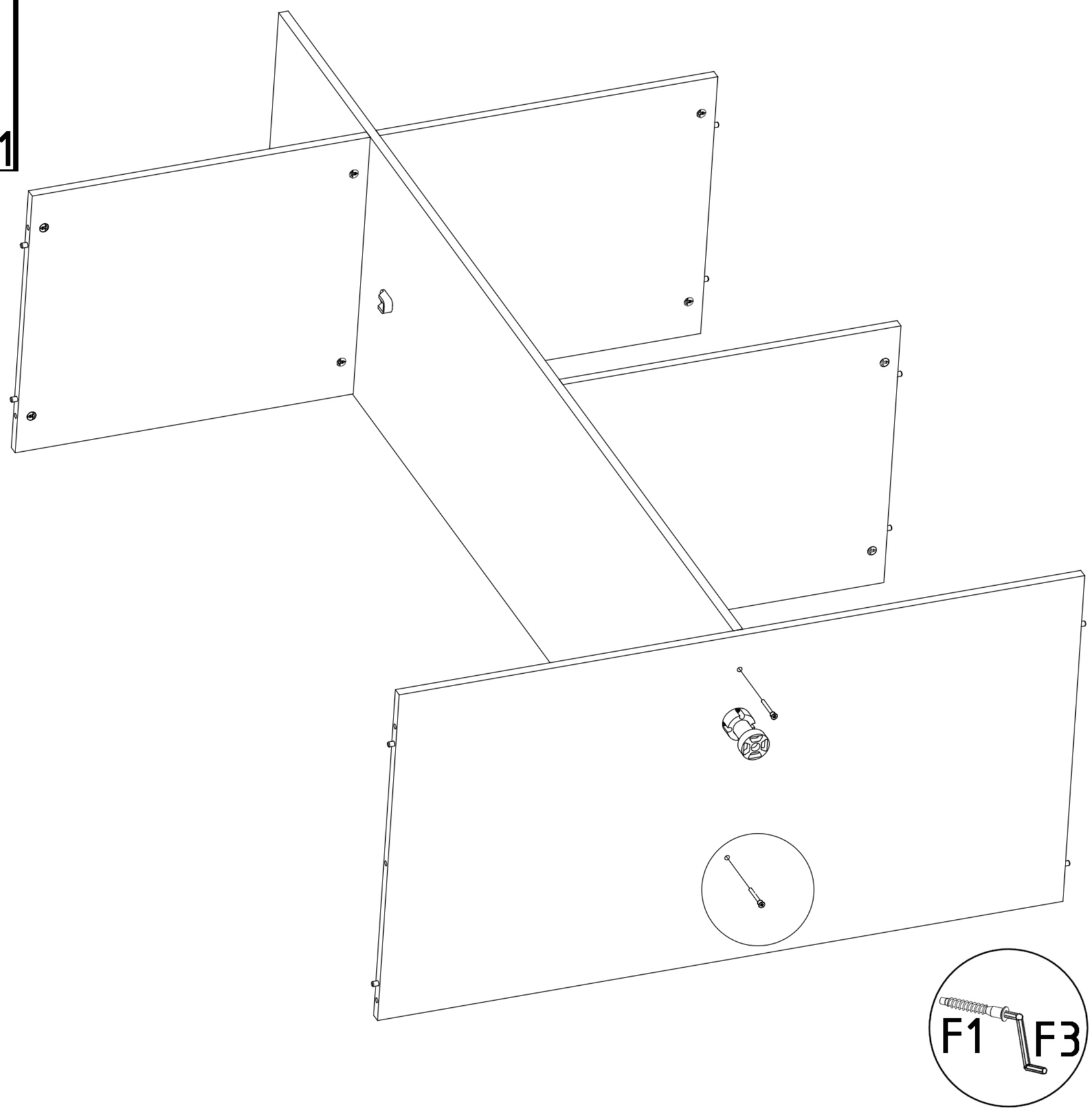

M1	E1	K12	K11	S1
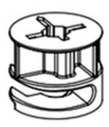 12x15mm x10	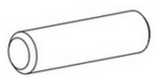 8x30mm x4	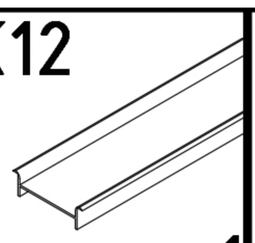 x1	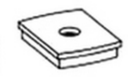 x4	 3,5x16mm x4

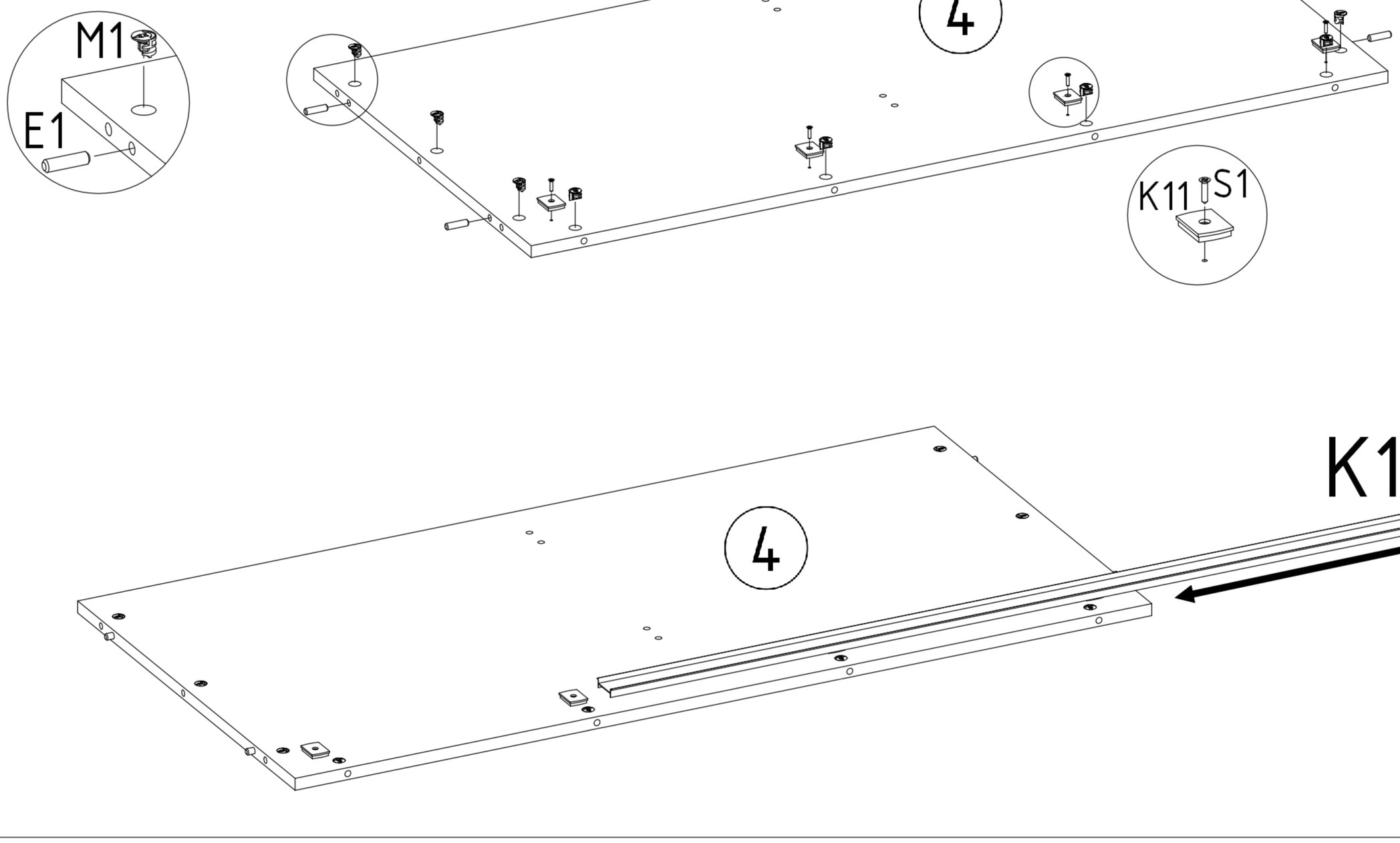

N1

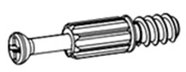

L=35mm x4

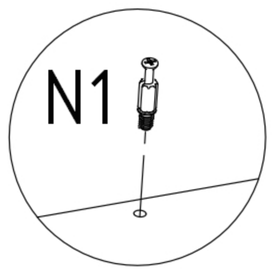

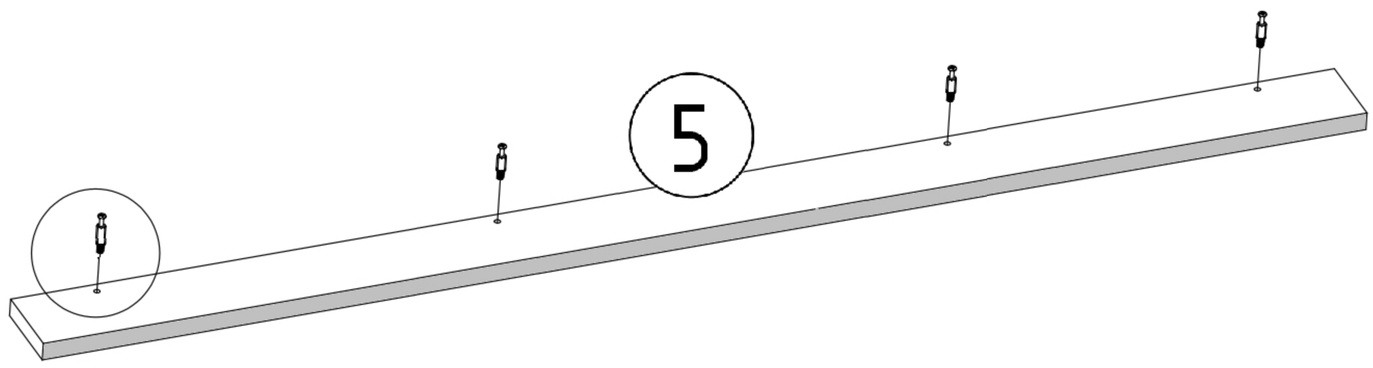

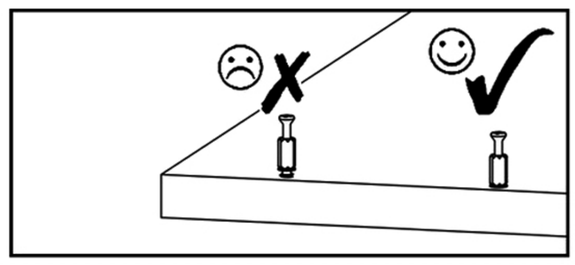

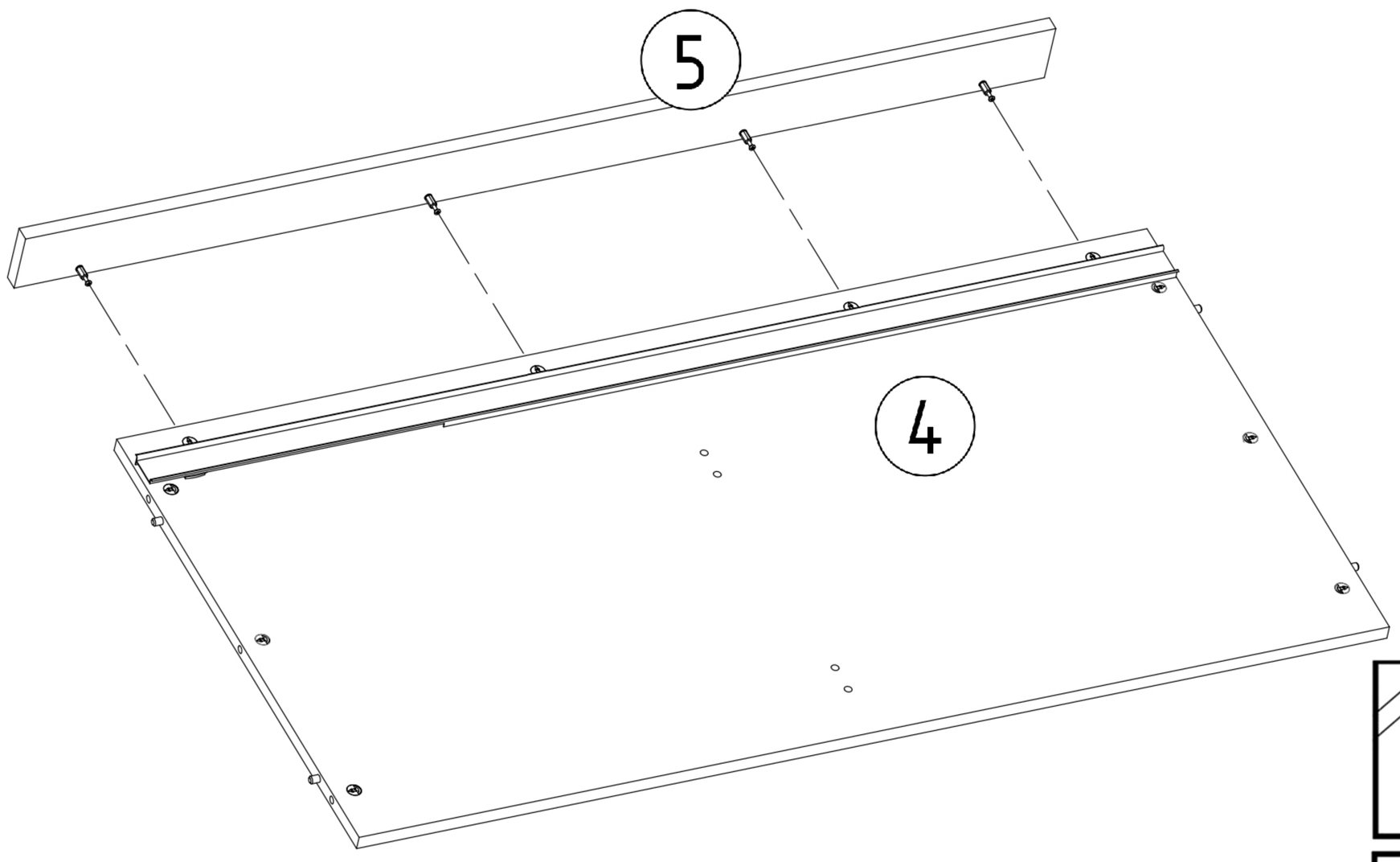

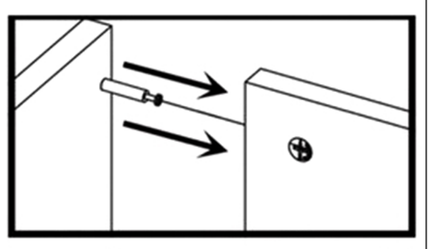

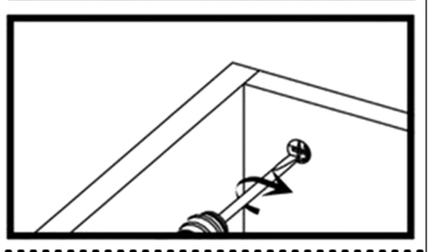

E1

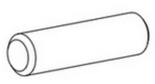

8x30mm x4

T1



x2

K1



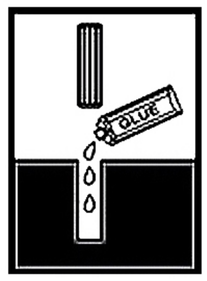

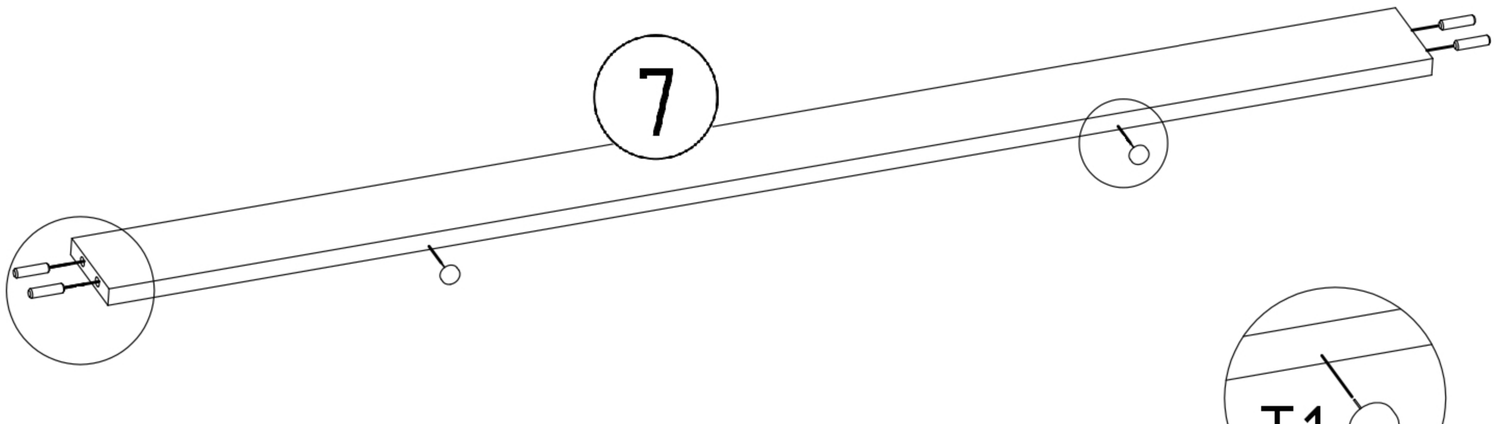

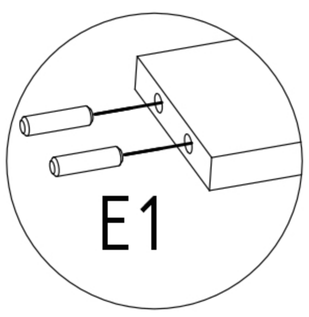

F1

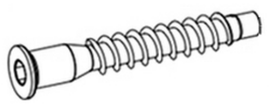

7x50mm x2

F3

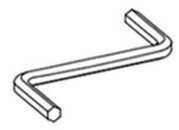

x1

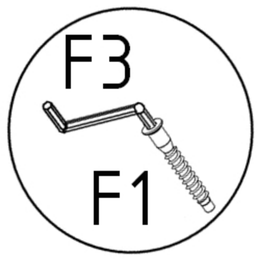

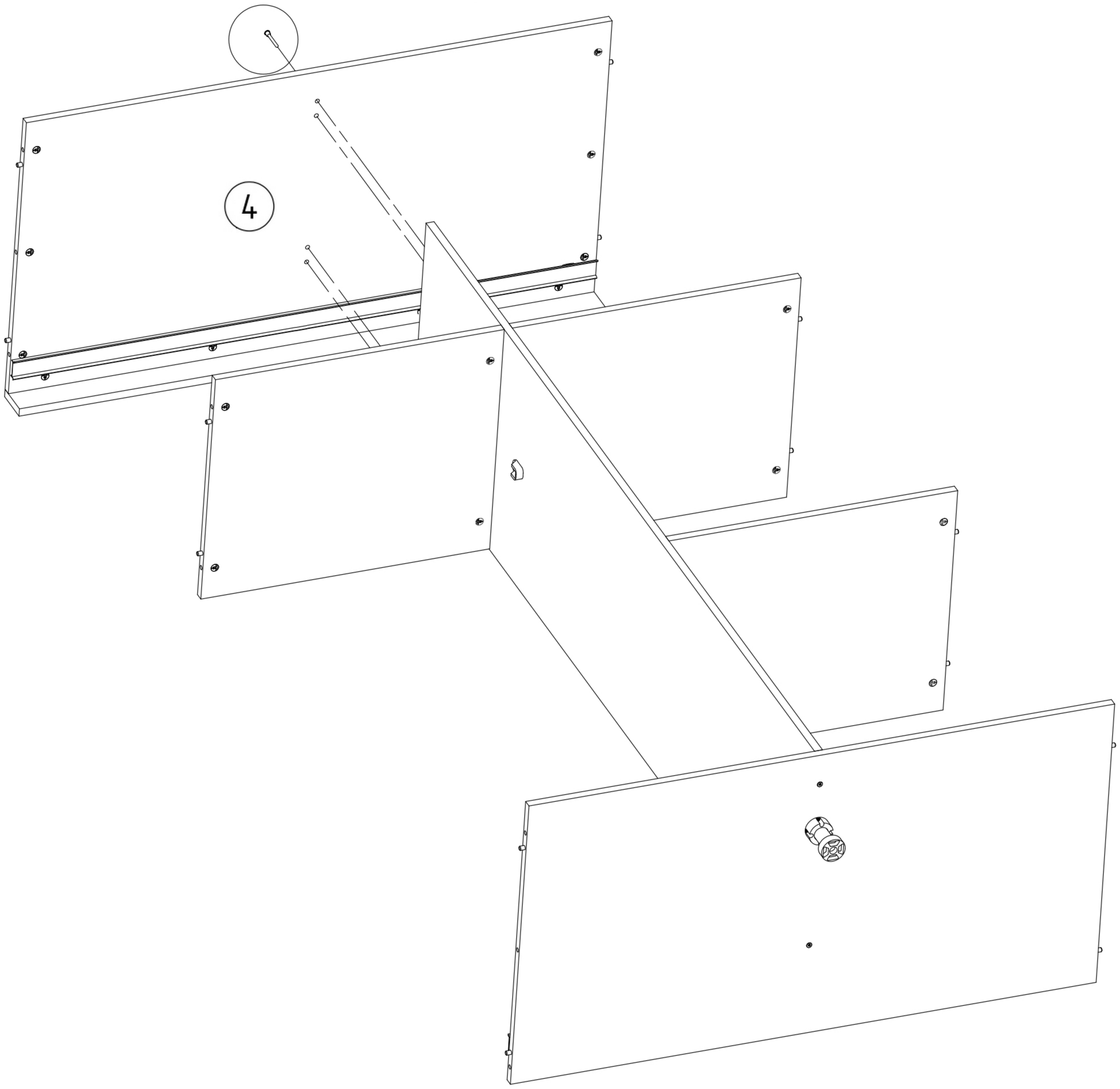

N1	T1	S1	K10
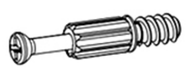			
L=35mm x8	x2	3,5x16mm x1	x1

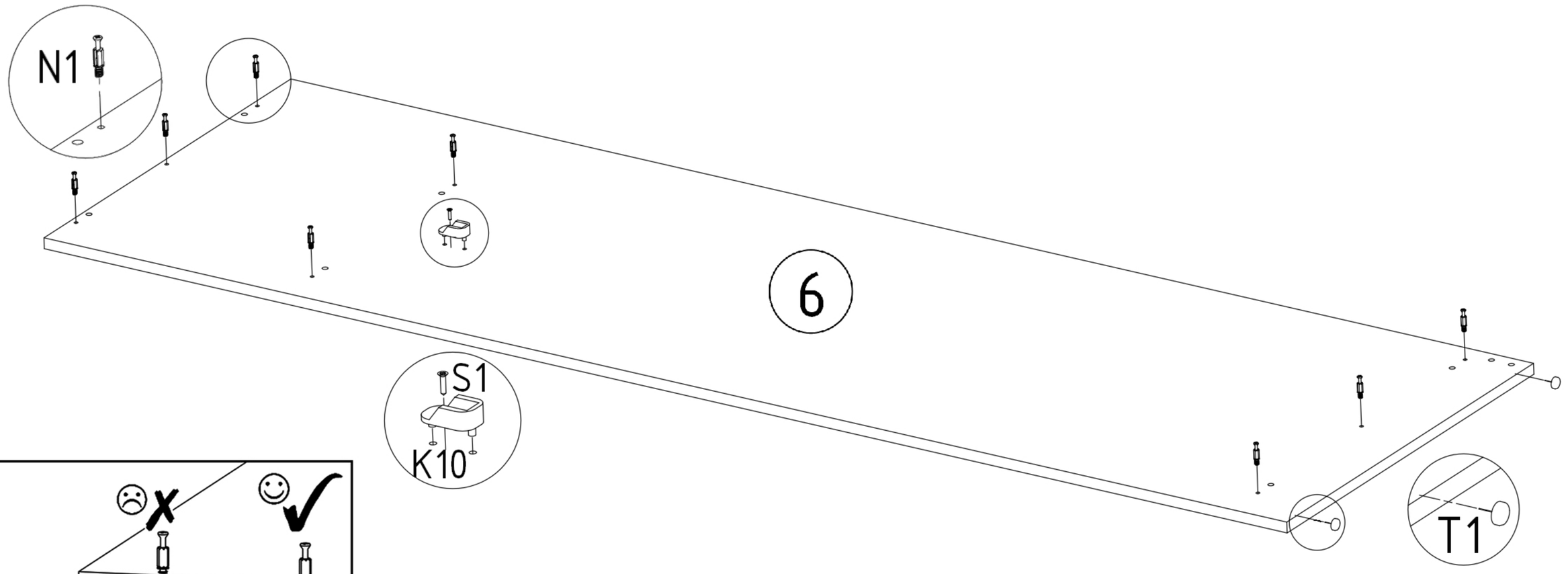

K1


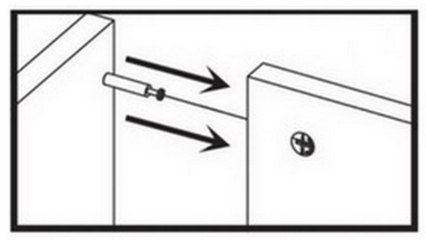

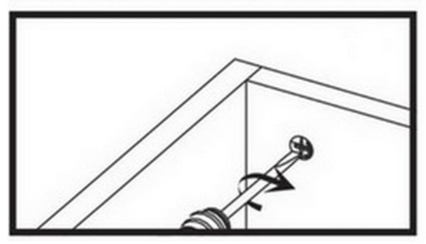

N1

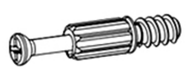

L=35mm x10

K7

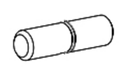

5x16mm x4

T1



x2

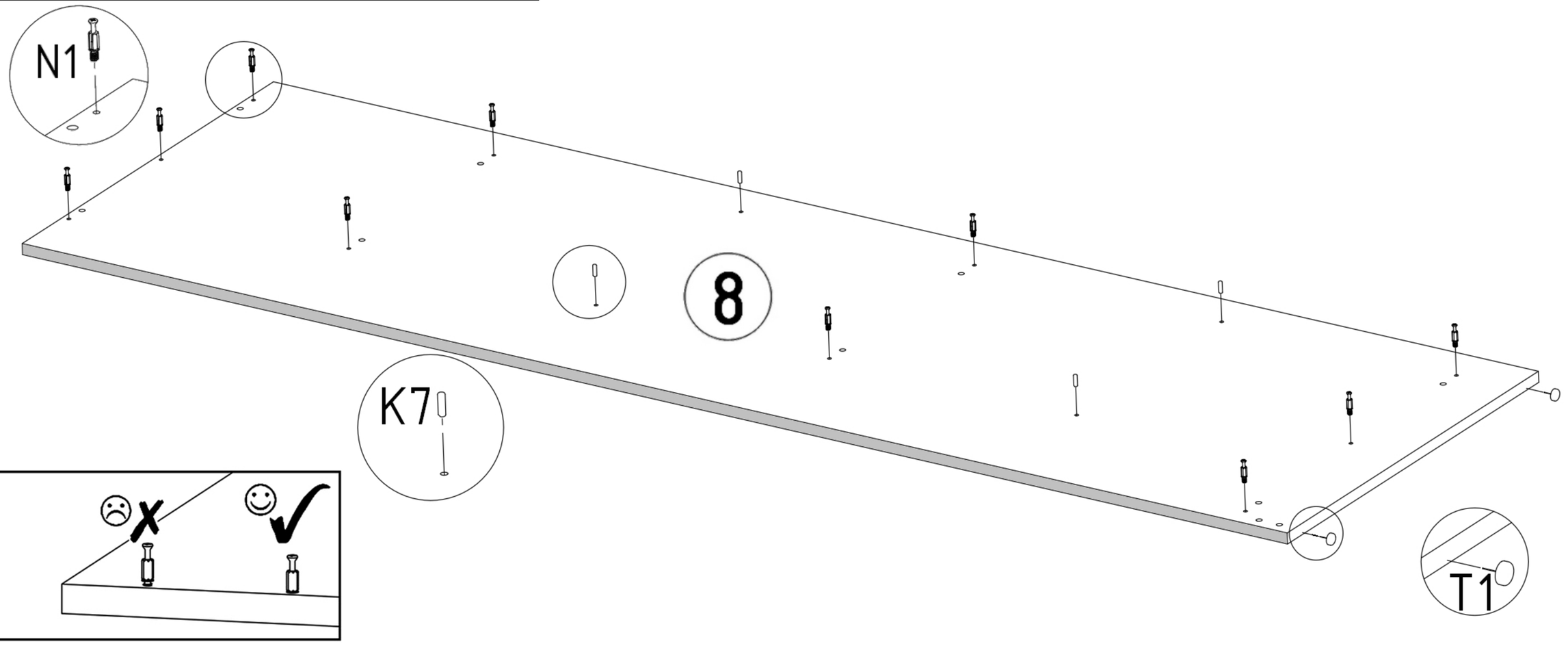

K1



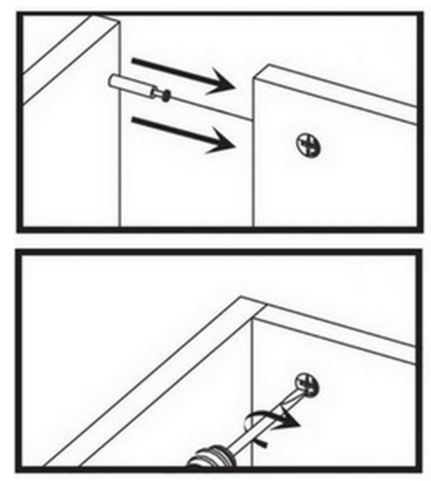

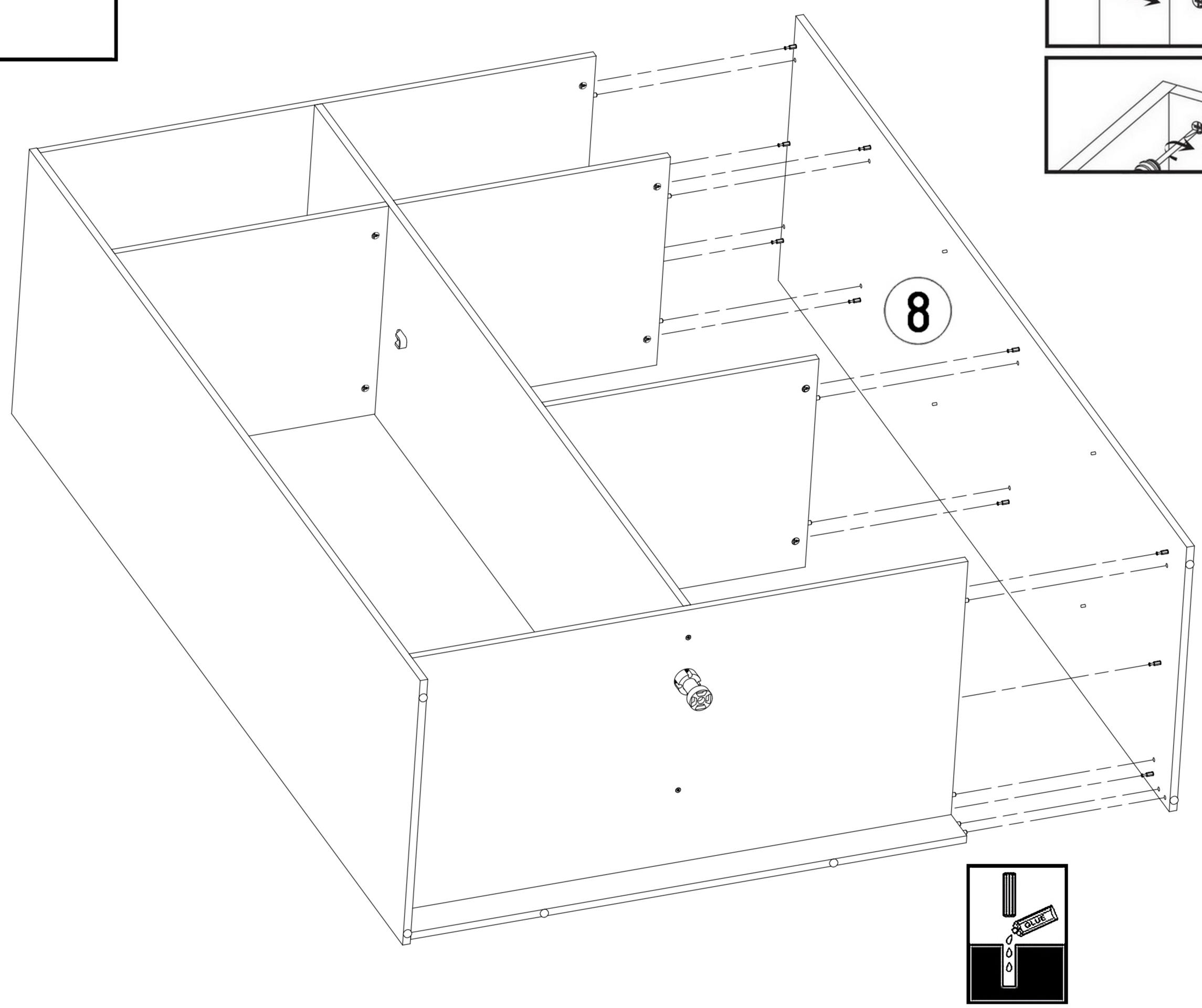

K4	S1	S6	Z1	V7
x16	3,5x16mm x4	2,5x20 x16	x150	x2

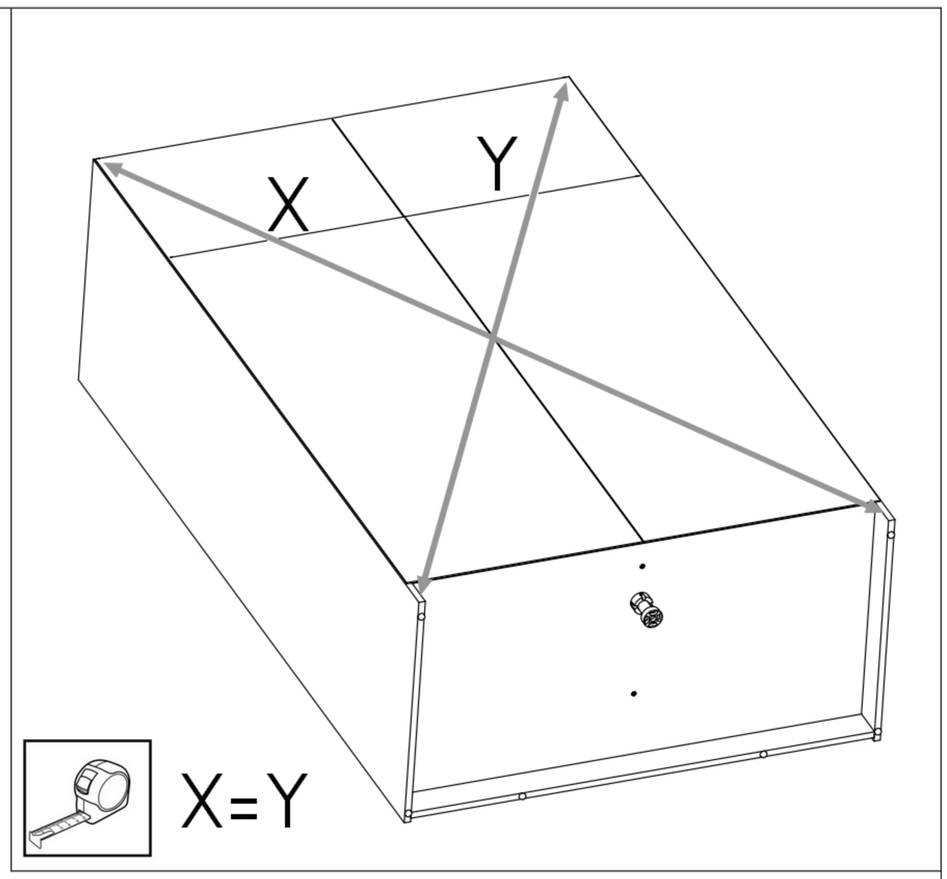

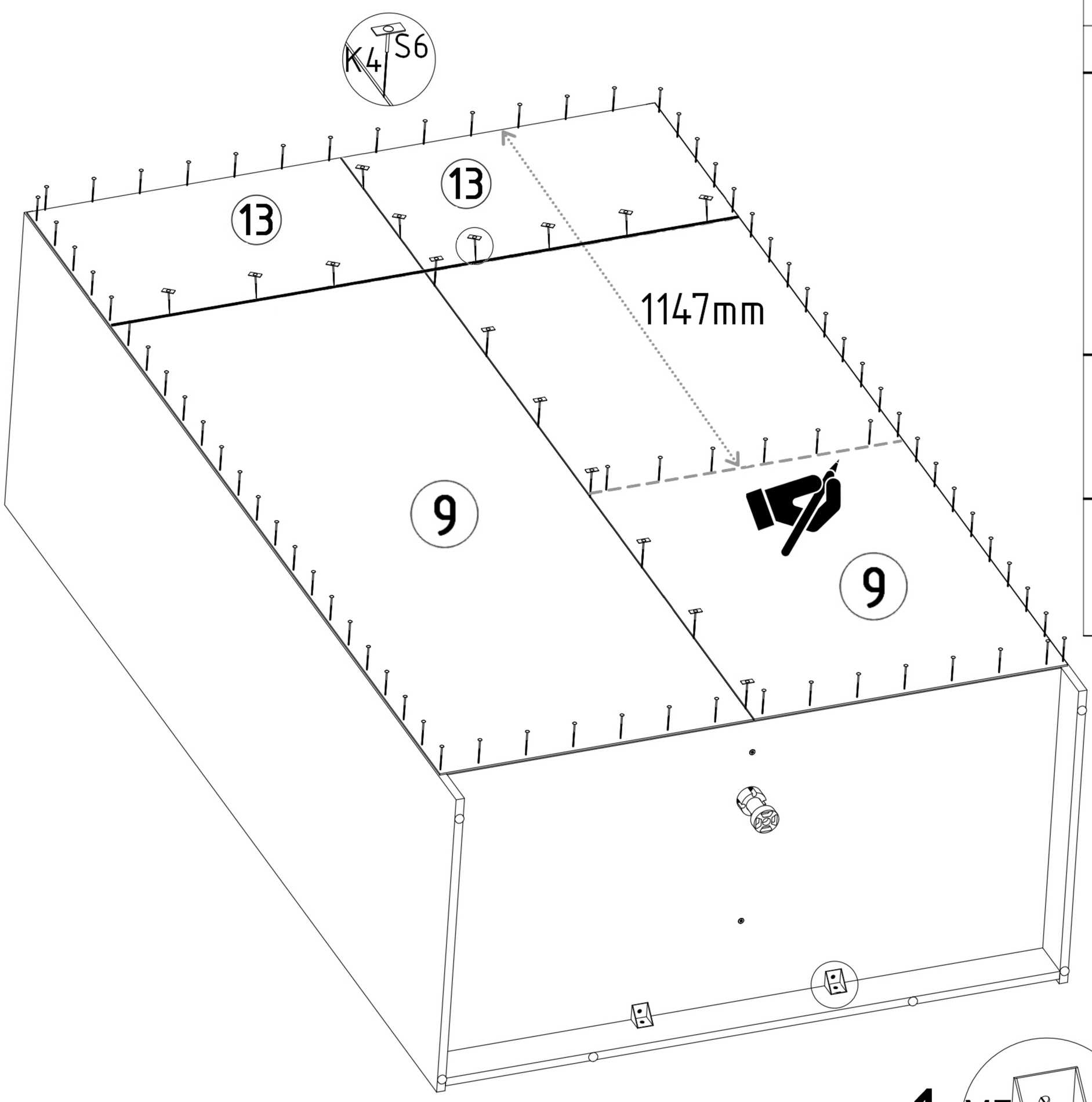

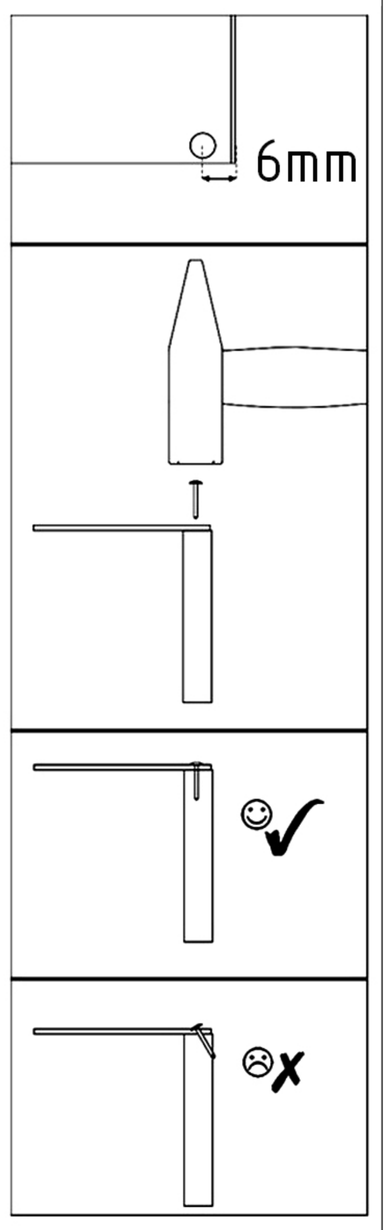

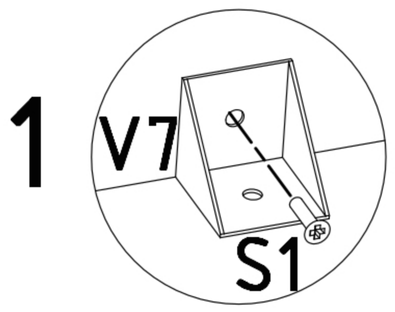

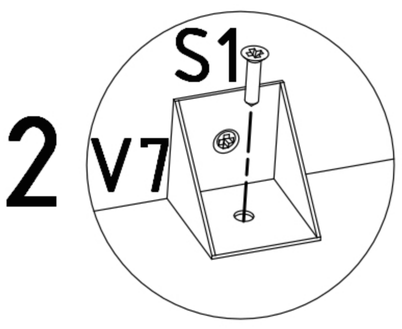

DÓŁ DRZWI / BOTTOM DOOR

11

GÓRA DRZWI / TOP DOOR

GÓRA DRZWI / TOP DOOR

10

DÓŁ DRZWI / BOTTOM DOOR

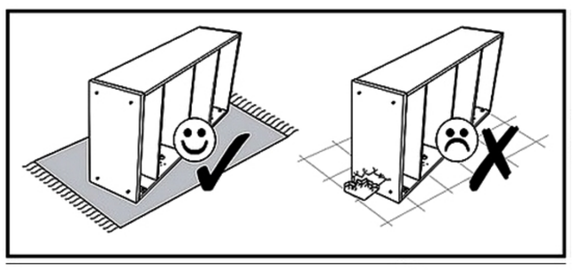

A7	A8	S10
x4	x4	4x15 mm x24

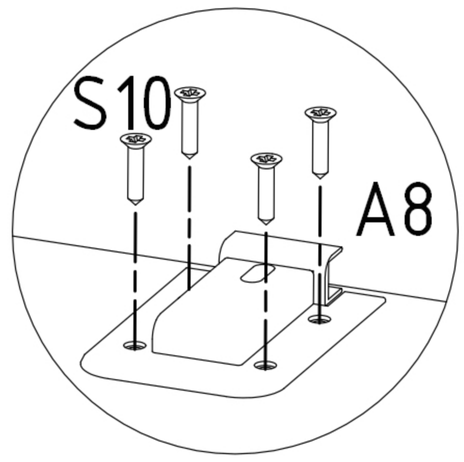

11

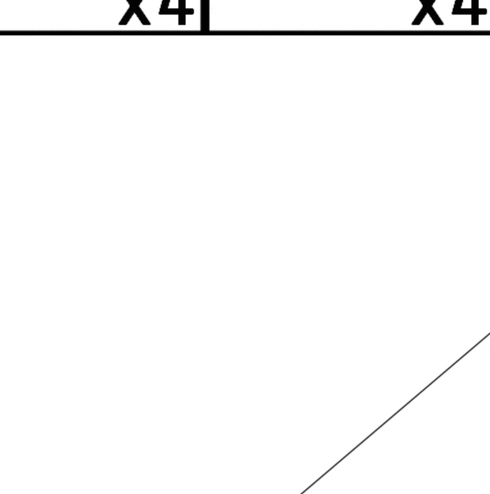

10

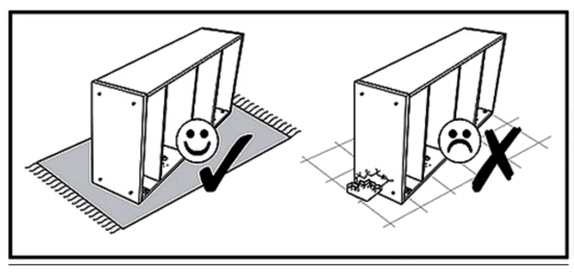

GÓRA DRZWI
BOK DRZWI
TOP DOOR
SIDE DOOR

22mm

GÓRA DRZWI
BOK DRZWI
TOP DOOR
SIDE DOOR

DÓŁ DRZWI
BOK DRZWI
BOTTOM DOOR
SIDE DOOR

DÓŁ DRZWI
BOK DRZWI
BOTTOM DOOR
SIDE DOOR

16mm

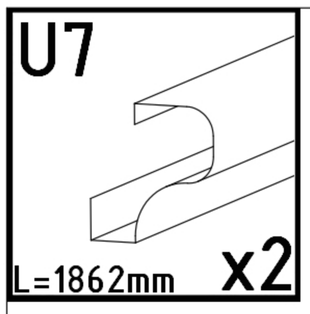
U7
L=1862mm
x2

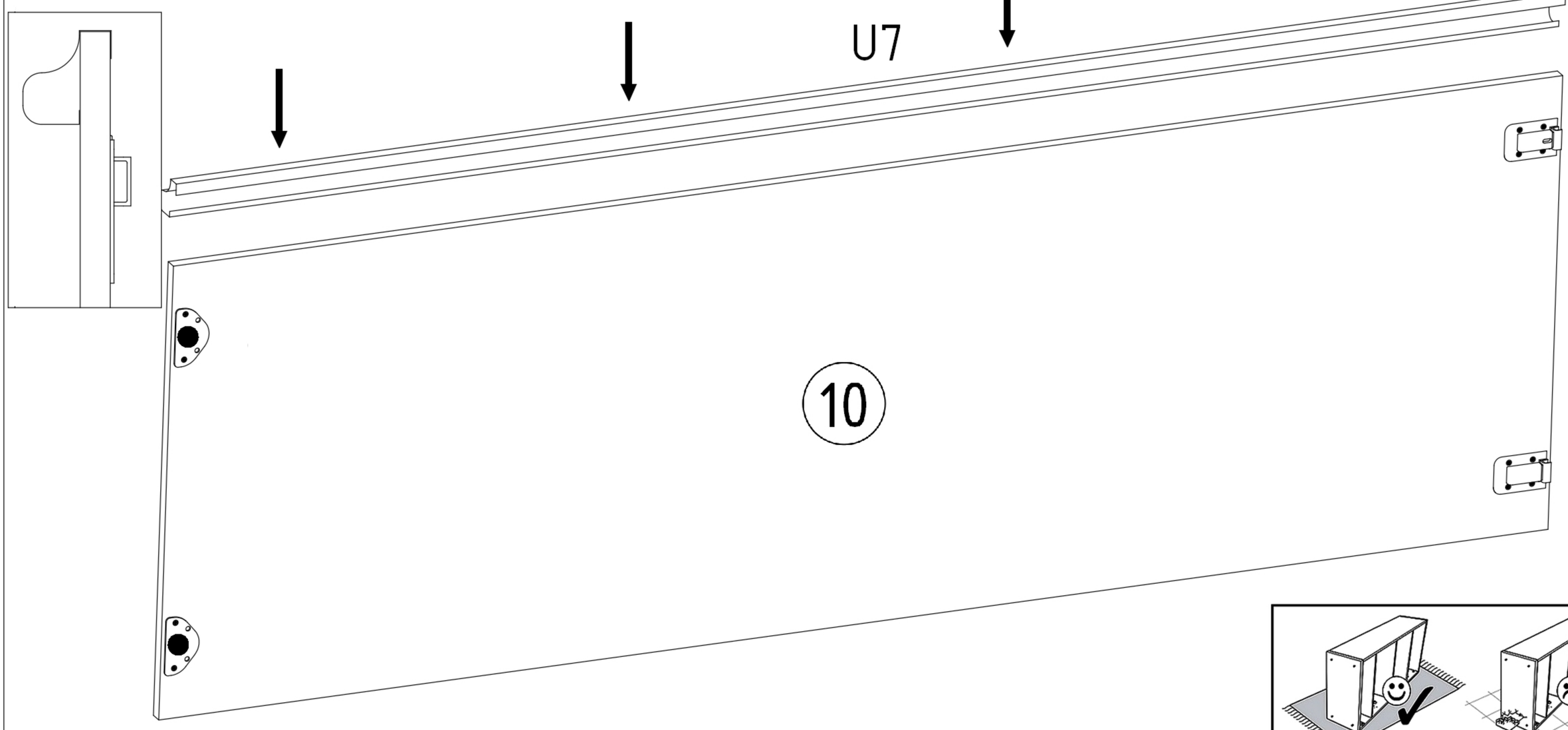
U7
10

U7
11

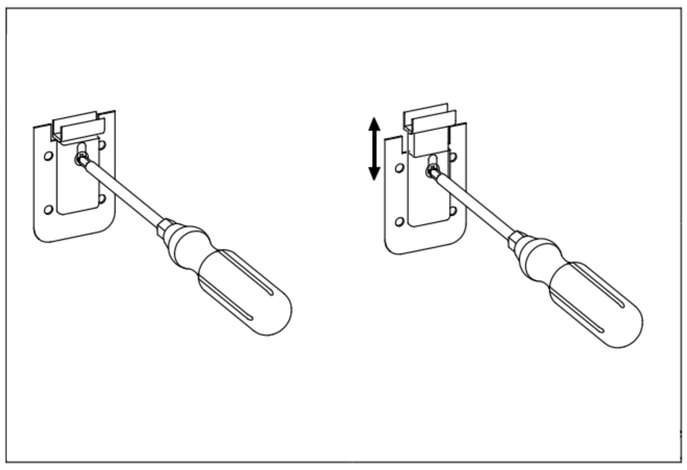

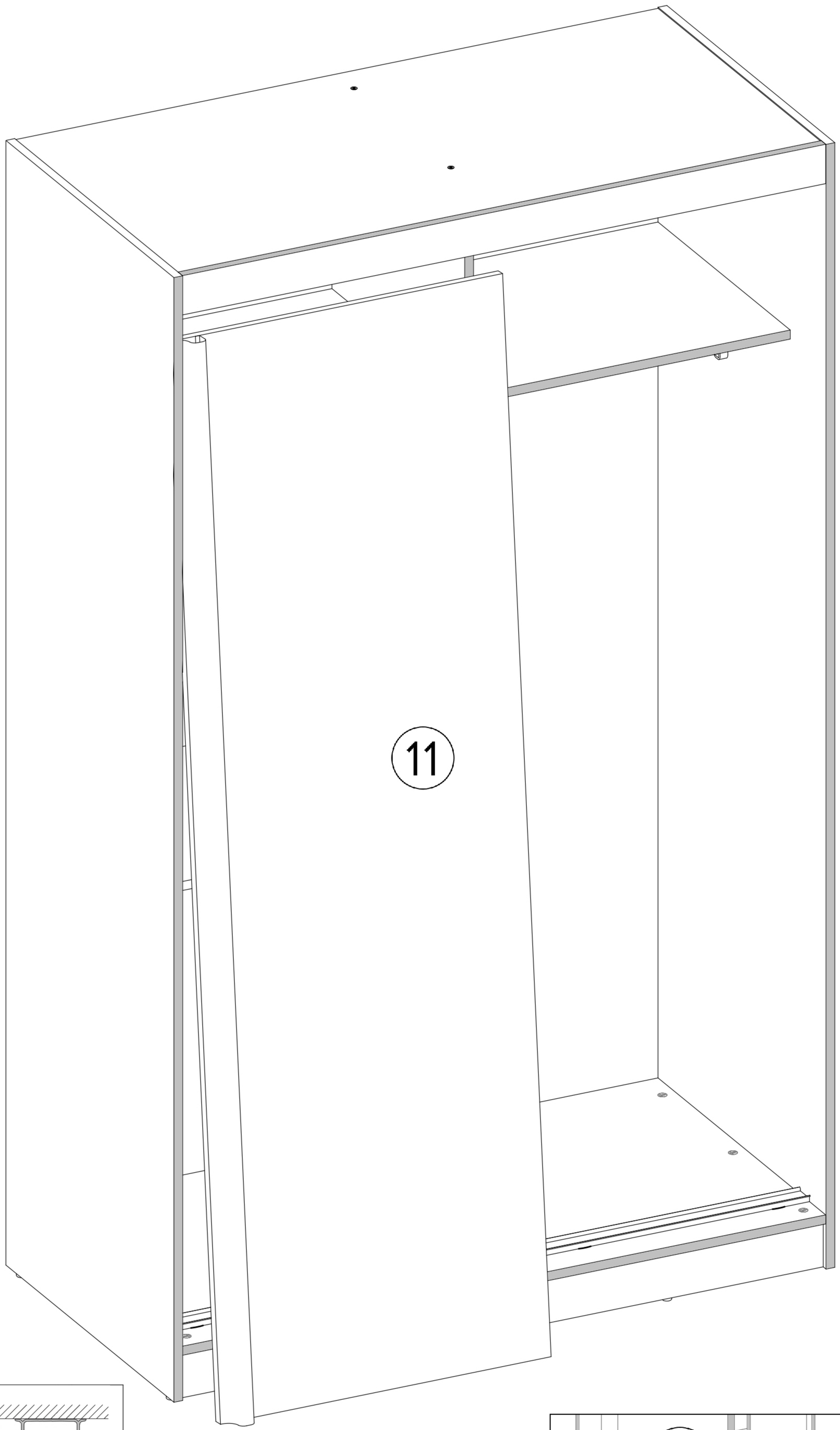
11

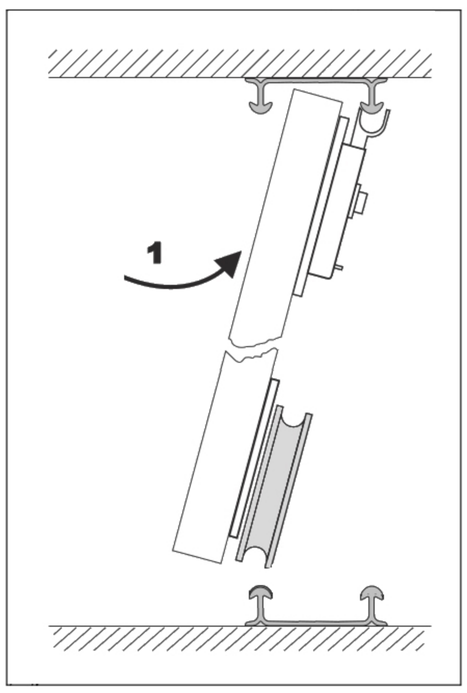
1
2

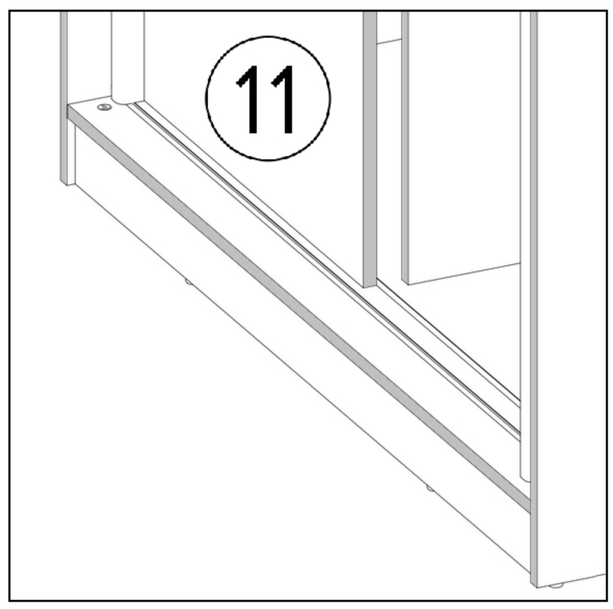
11

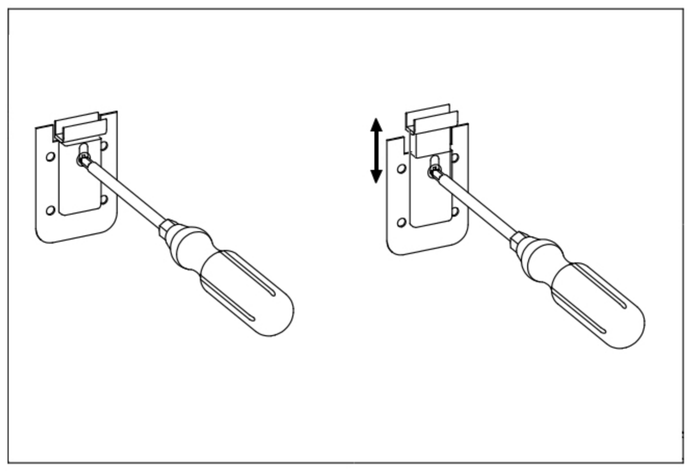

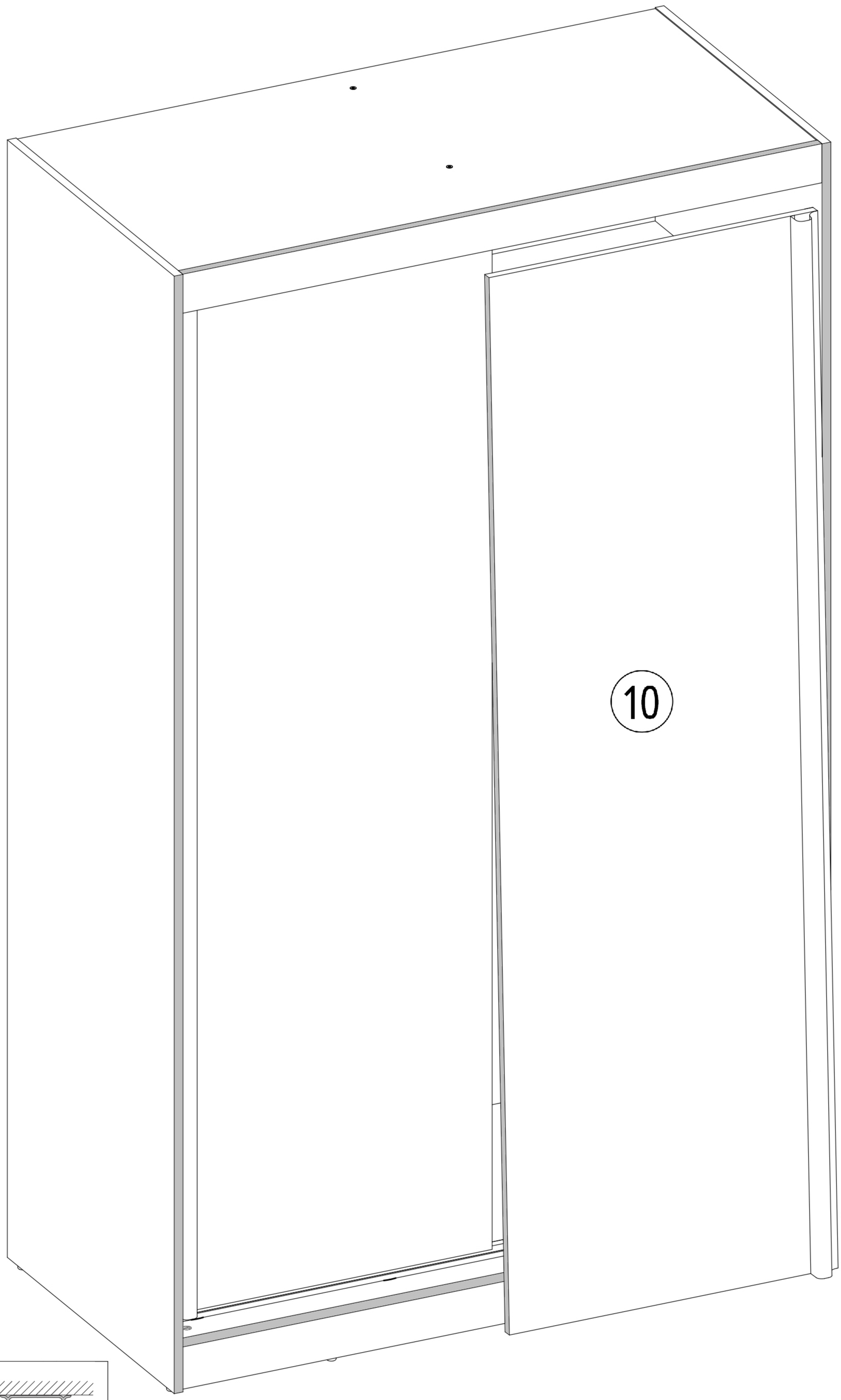
10

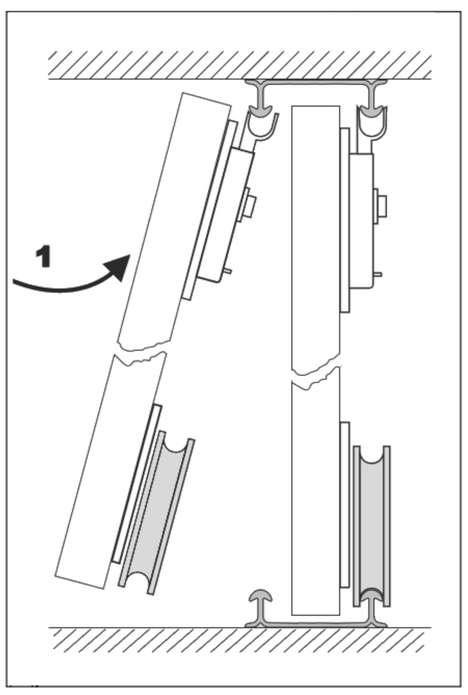
1

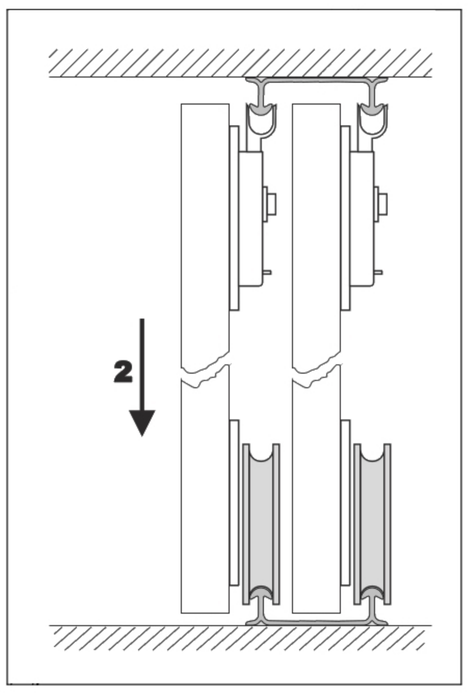
2

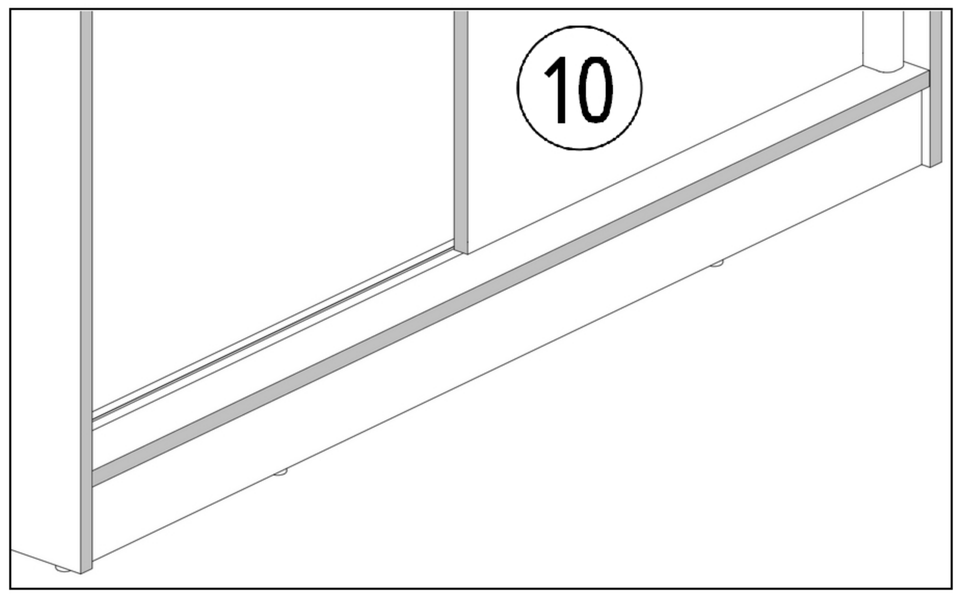
10

K9	S1	U5	M2
x1	3,5x16mm x2	x1	x5

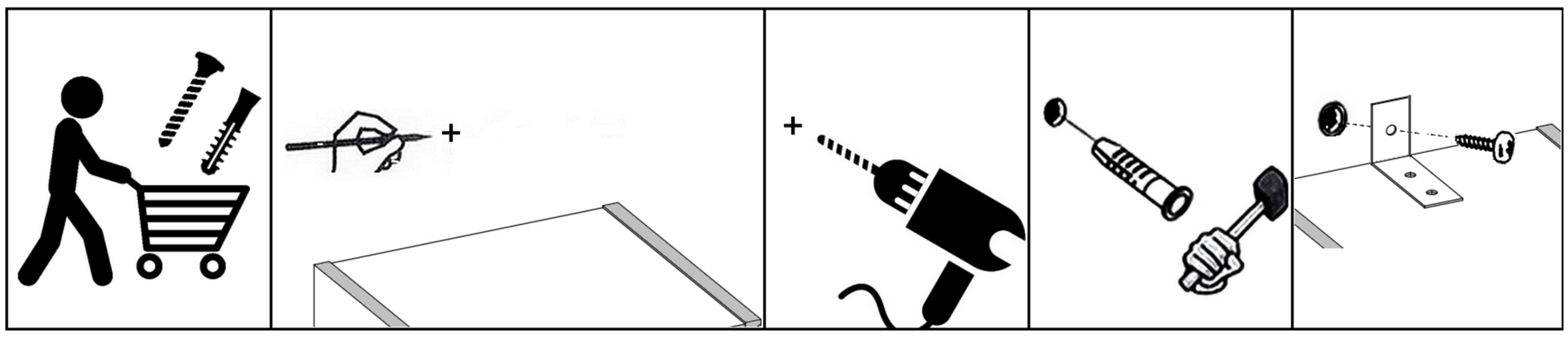

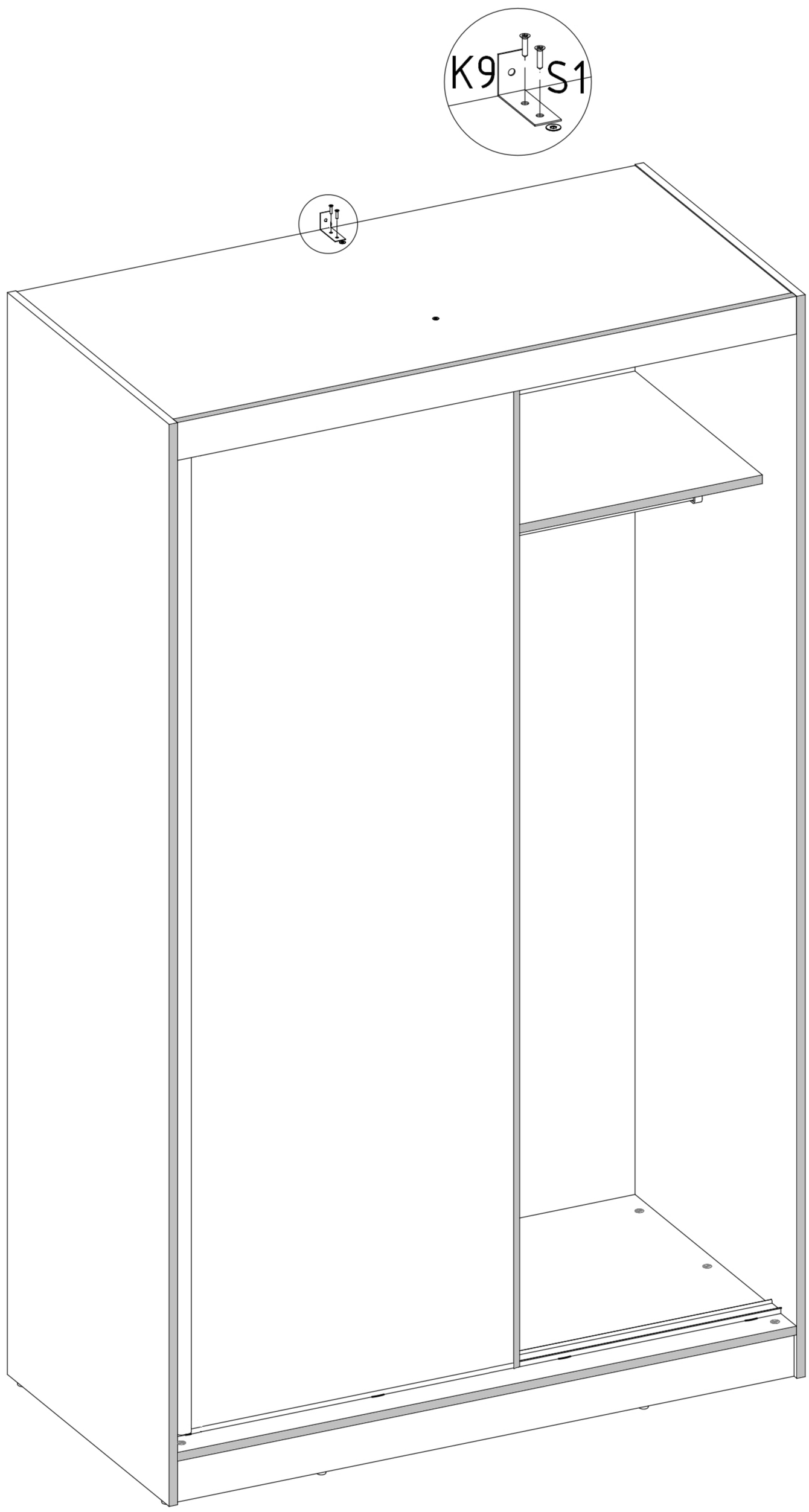

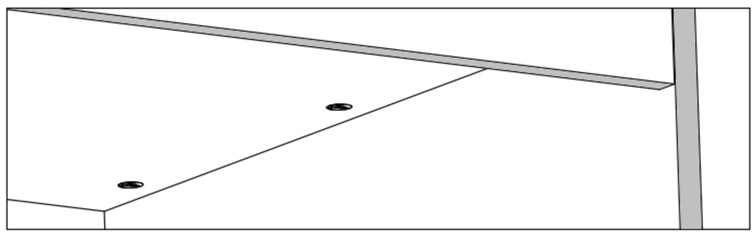

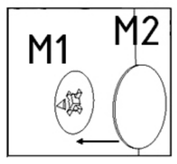

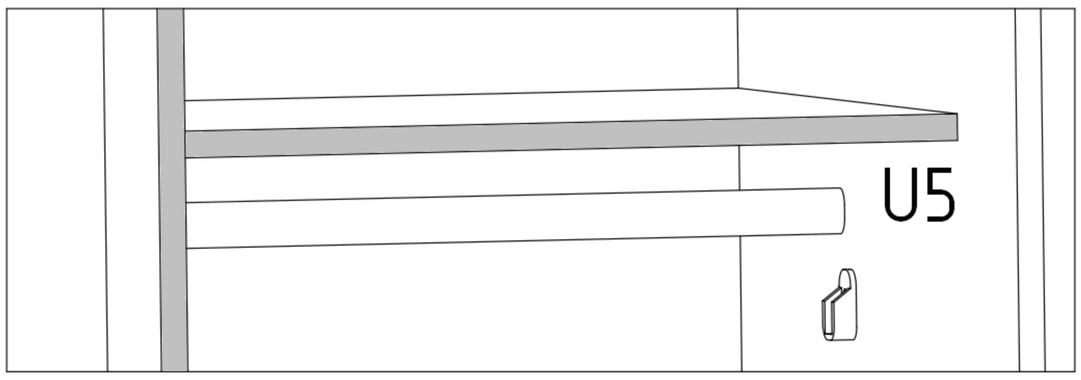

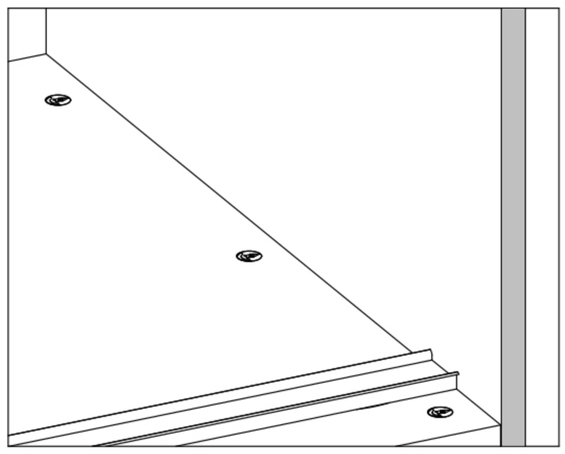

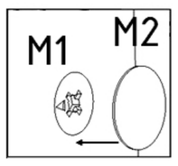

M2

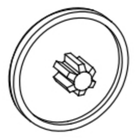

x5

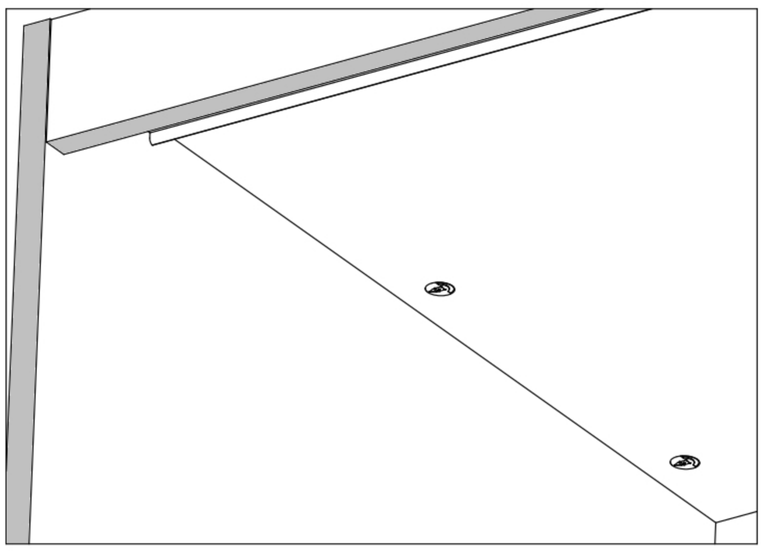

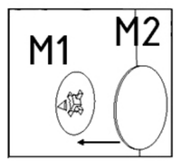



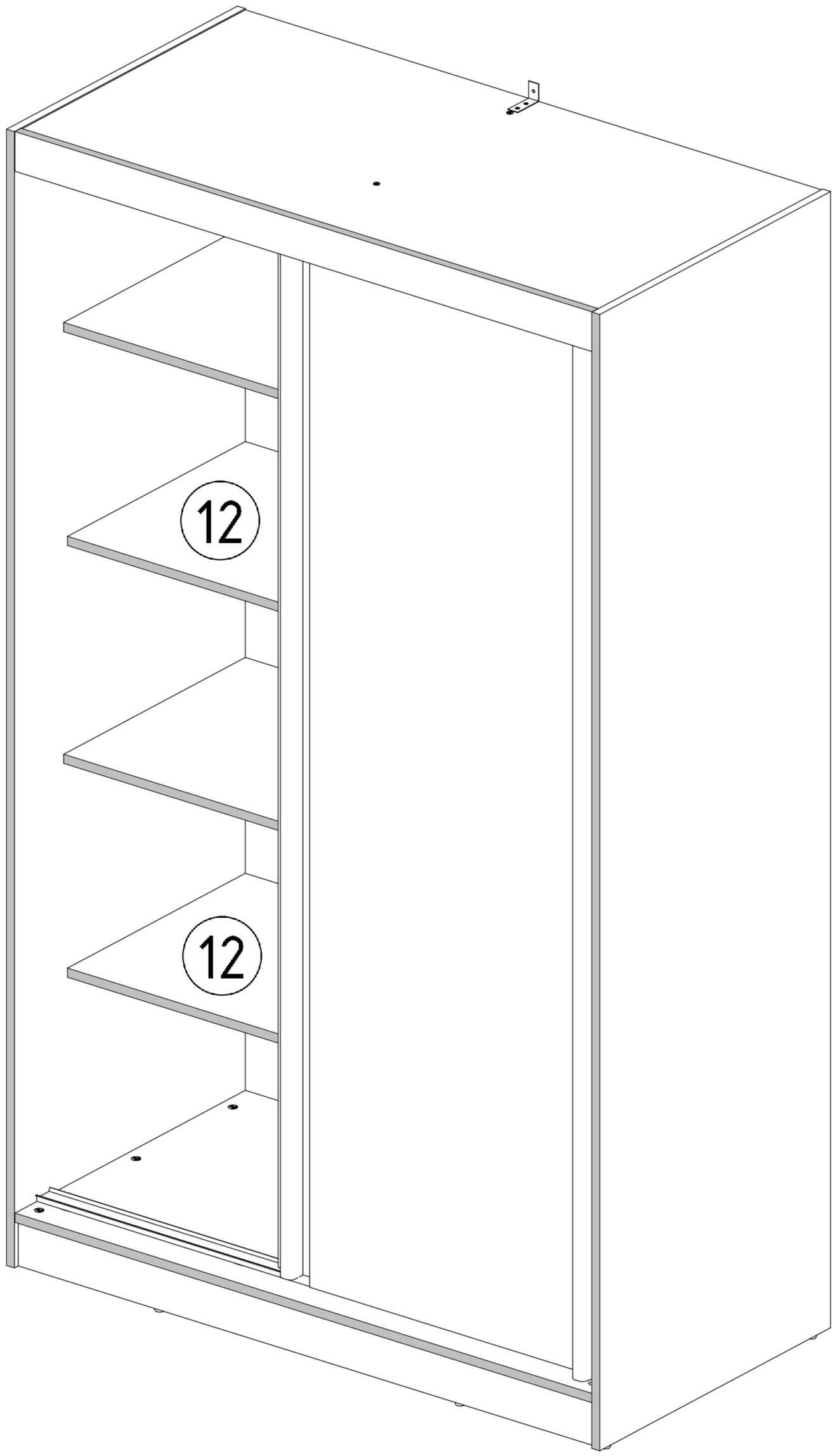

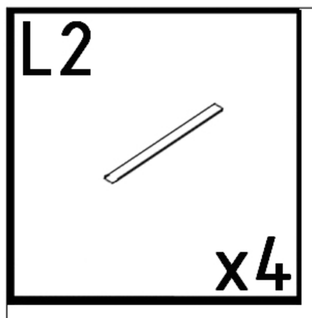
L2
x4

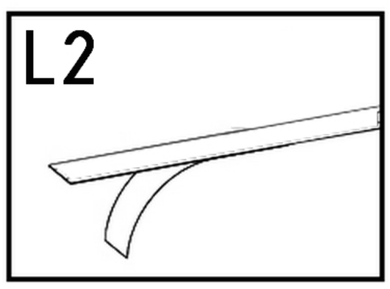
L2

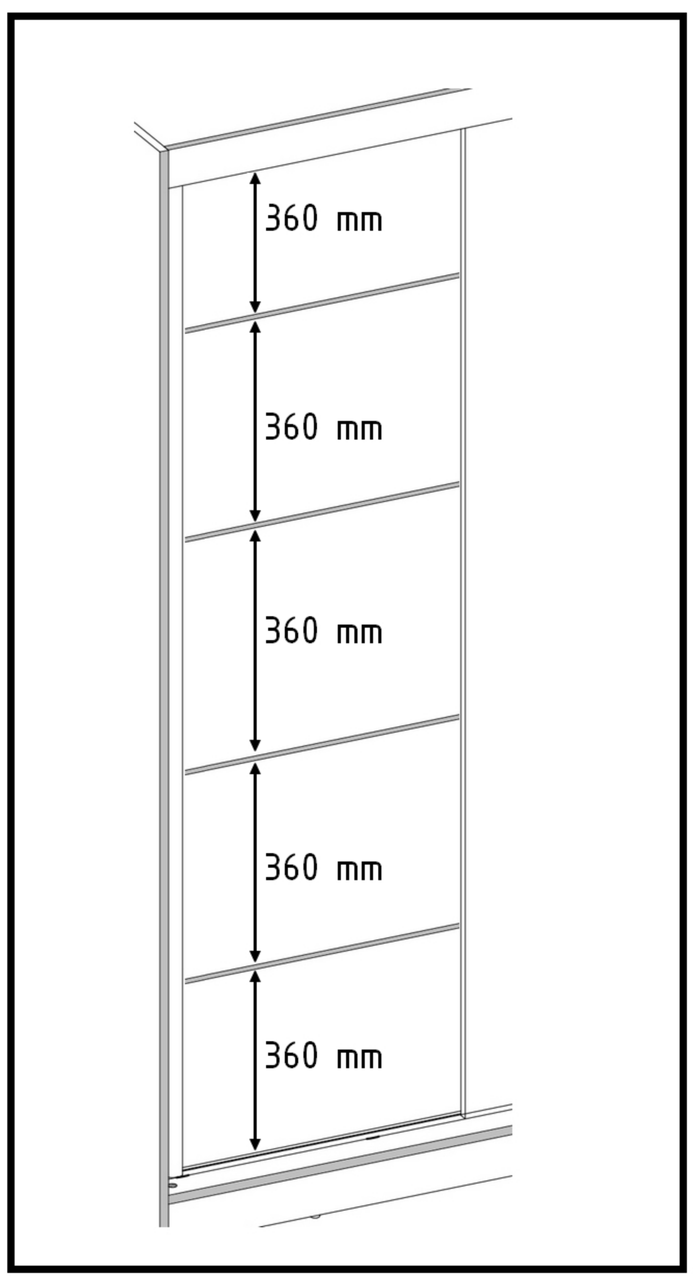
360 mm
360 mm
360 mm
360 mm
360 mm

