INSTRUKCJA MONTAŻU

Szafa przesuwna 120 cm z listwami ozdobnymi

Kolor: Dąb Sonoma

Kod produktu: OR10156

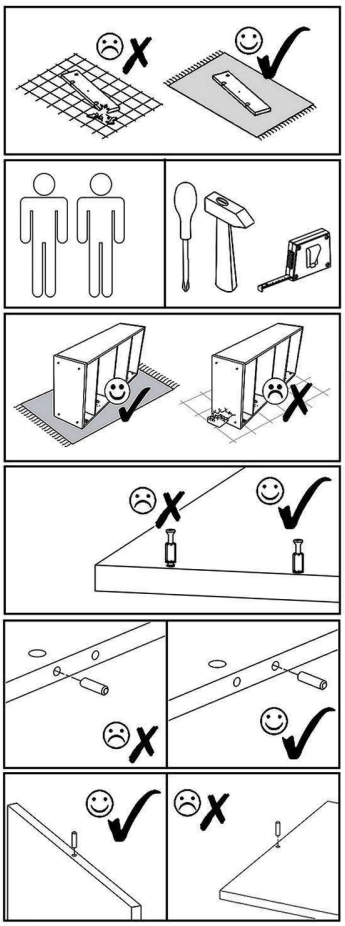

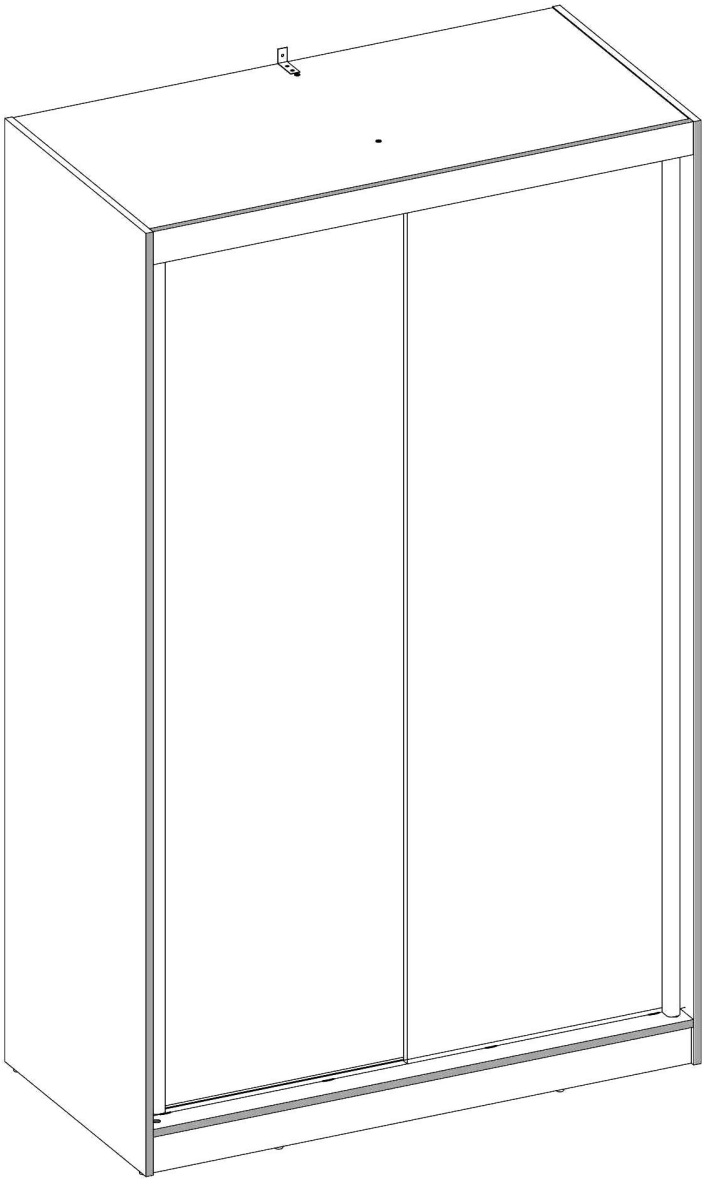

V55 x4	V56 x4	V20 x8	B1 S-A ø17/4mm x10	B1 Ant. ø17/4mm x10	B1 B ø17/4mm x10	
V41 x1	V15 x16	V50 L=568mm x4	S6 2,5x20 x16	V12 GLUE x1	V25 x2	T4 x1
N1 L=35mm x23	M1 12x15mm x27	V8 L=565mm x1	S1 3,5x16mm x20	E1 8x30mm x24	E3 8x50mm x2	V19 x2	V21 L=1164mm x2
Z1 x150	F1 7x50mm x4	V16 5x16mm x8	F3 x1	S9 4x15 mm x24	N4 L=62mm x2	T1 x6	U7 L=1862mm x2

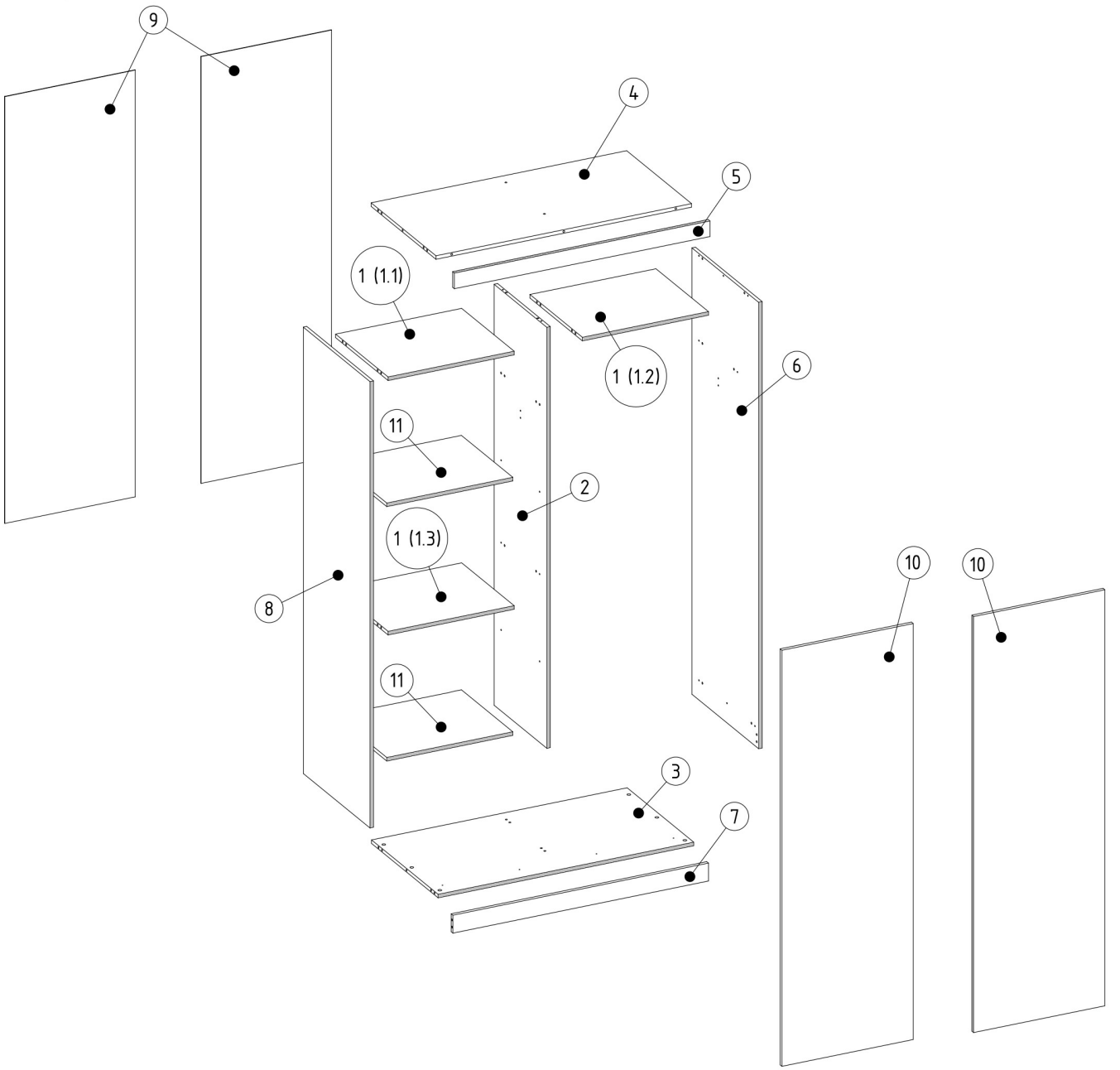

000307	11	2
000124	10	2
000267	9	2
000269	8	1
000302	7	1
000270	6	1
000303	5	1
000305	4	1
000304	3	1
000266	2	1
000306	1	3
ID	NUMBER	QUANTITY

M1	E1	E3
12x15mm x4	8x30mm x2	8x50mm x2

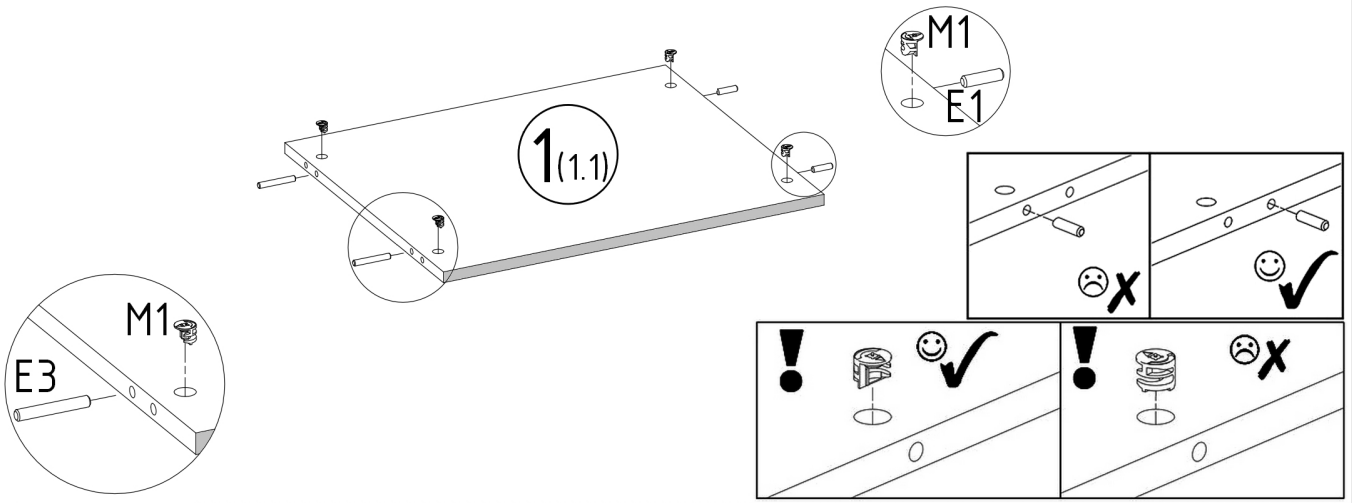

M1	E1
12x15mm x4	8x30mm x2

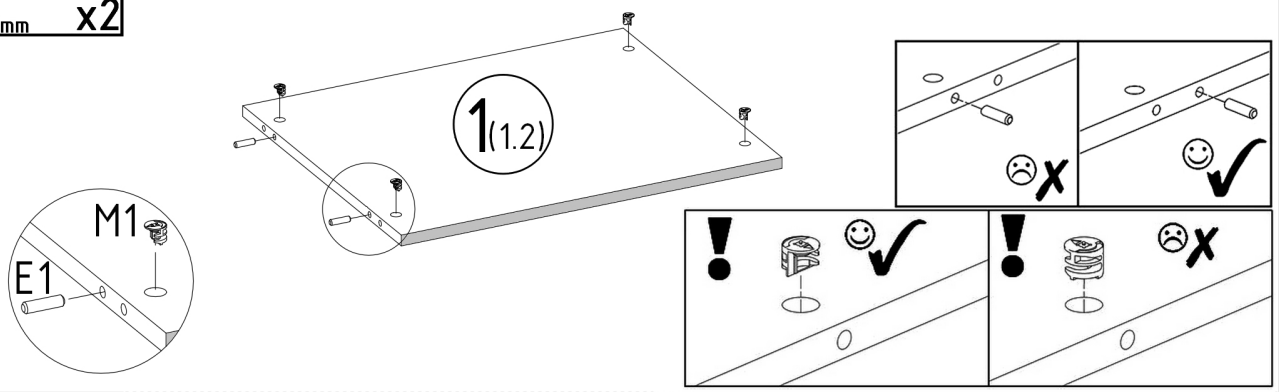

M1	E1
12x15mm x4	8x30mm x4

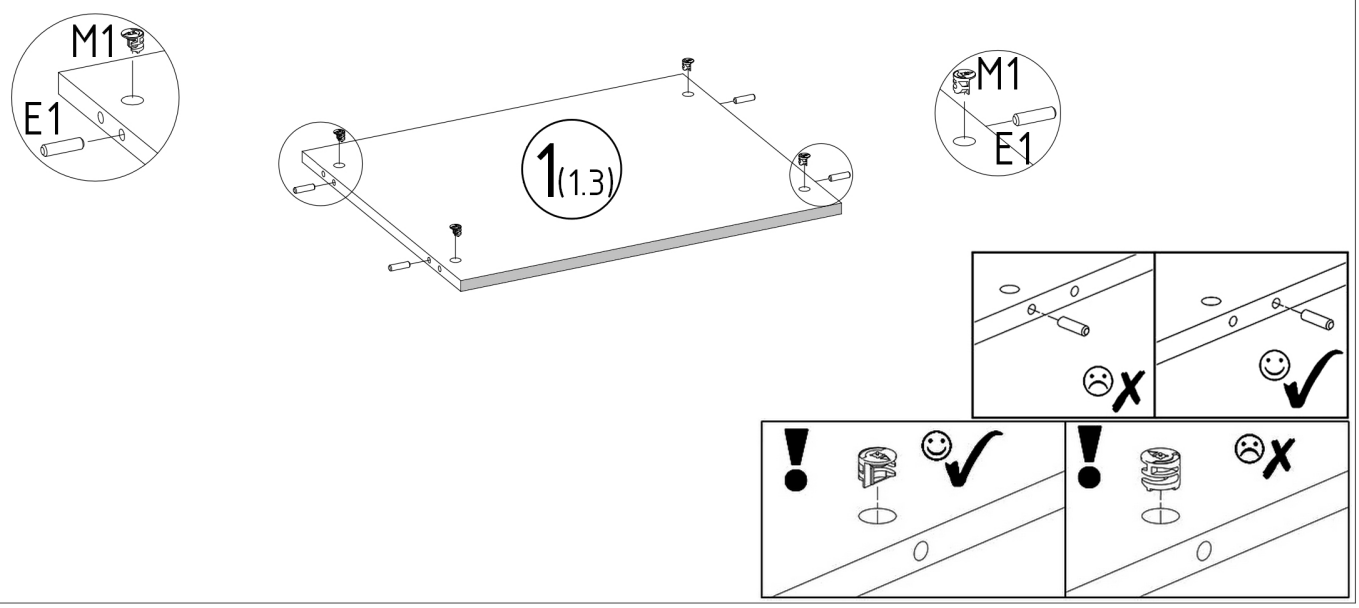

N1	V16	E1
L=35mm x2	5x16mm x4	8x30mm x4

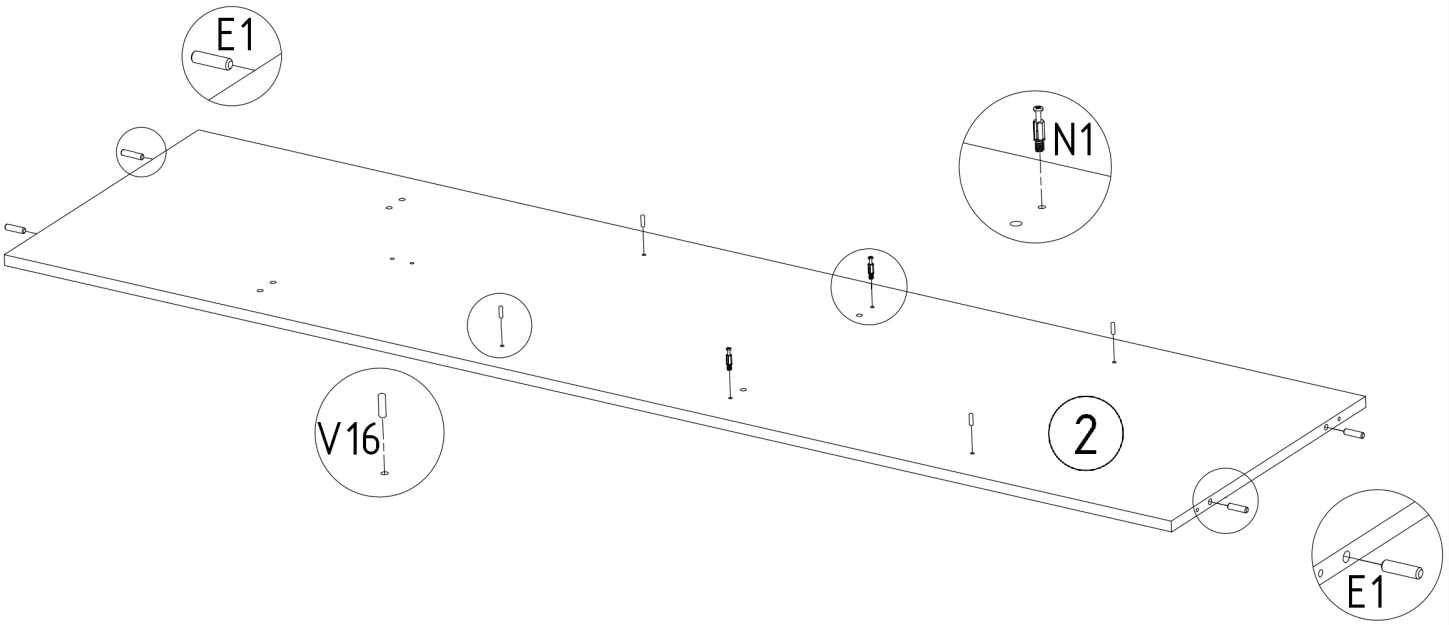

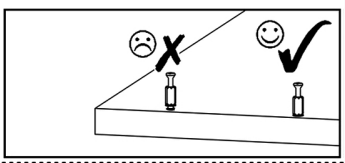

S1	V19
3,5x16mm x1	x1

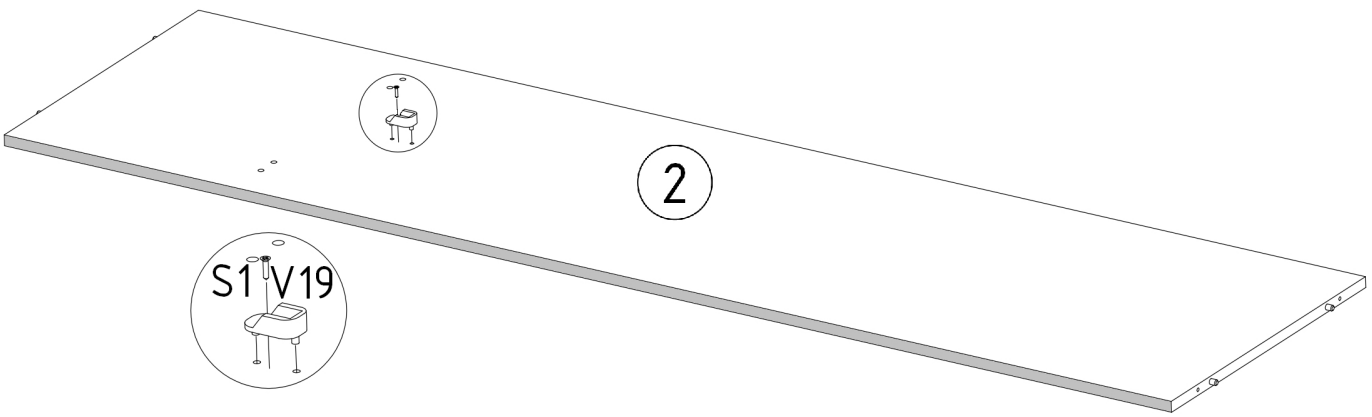

N4 x2

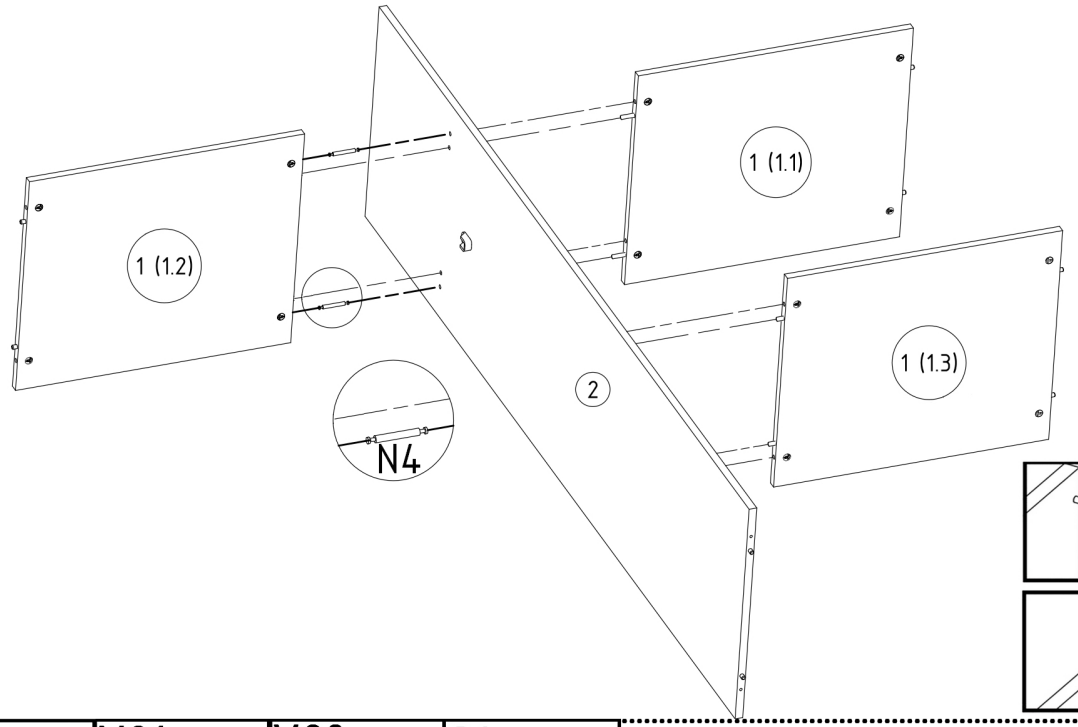

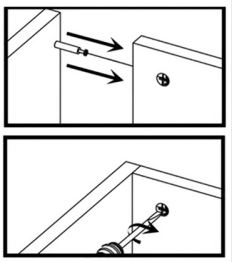

M1 12x15mm x6 | E1 8x30mm x4 | V21 x1 | V20 x4 | S1 3,5x16mm x4

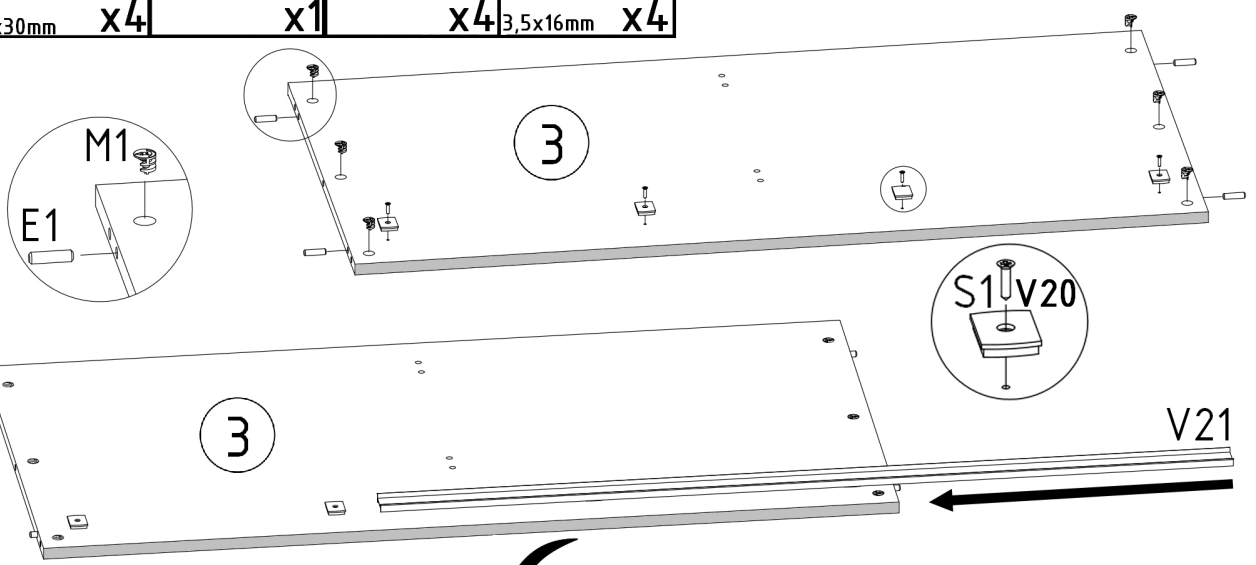

S1 3,5x16mm x4 | T4 x1

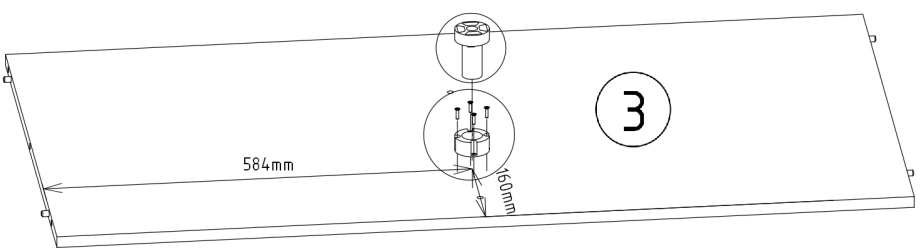

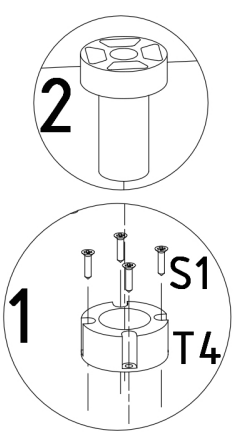

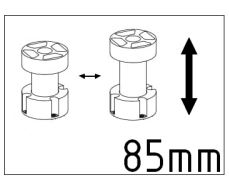

F1	F3
7x50mm x2	x1

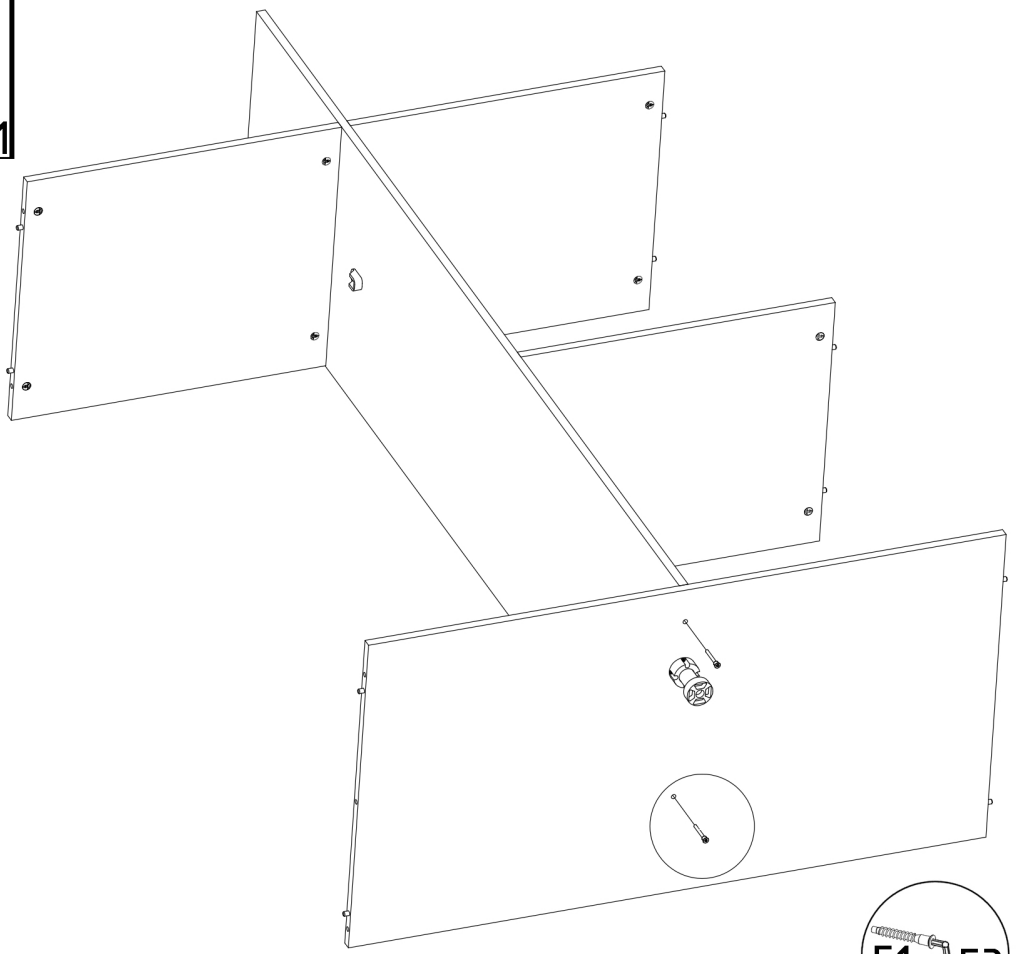

M1	E1	V21	V20	S1
12x15mm x9	8x30mm x4	x1	x4	3,5x16mm x4

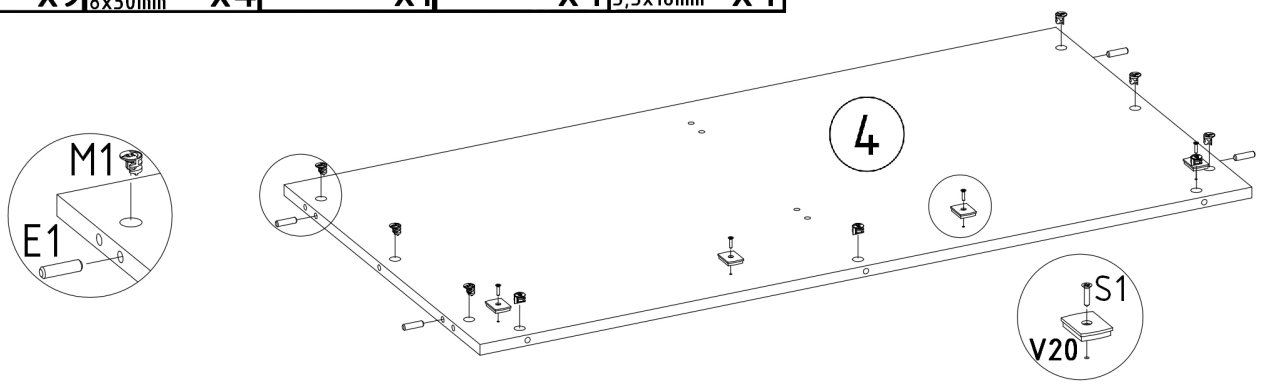

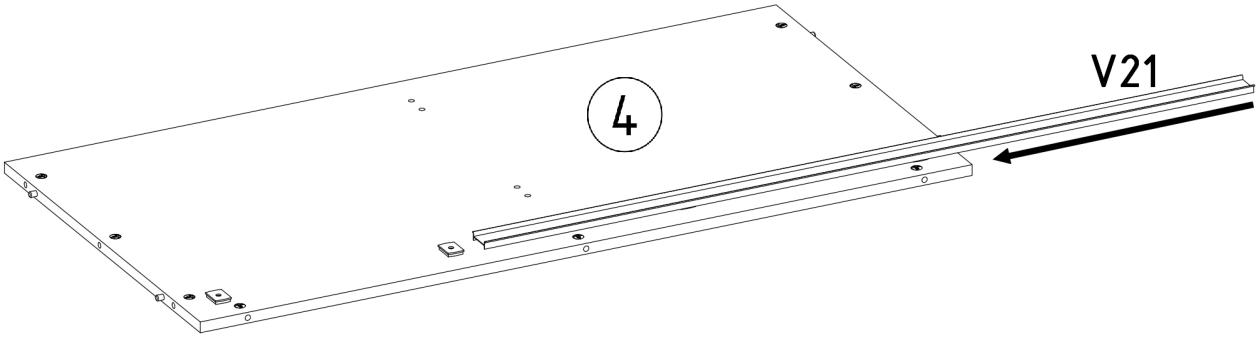

N1



L=35mm x3

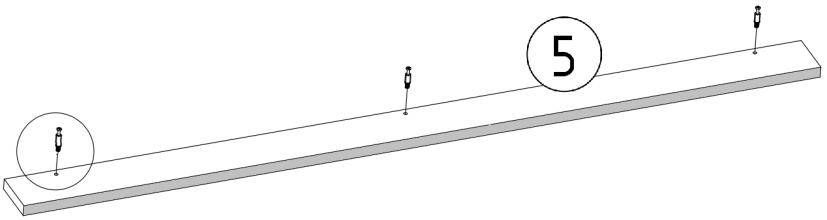

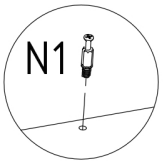

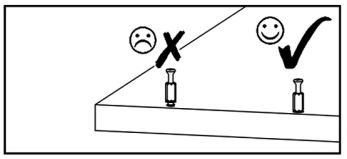

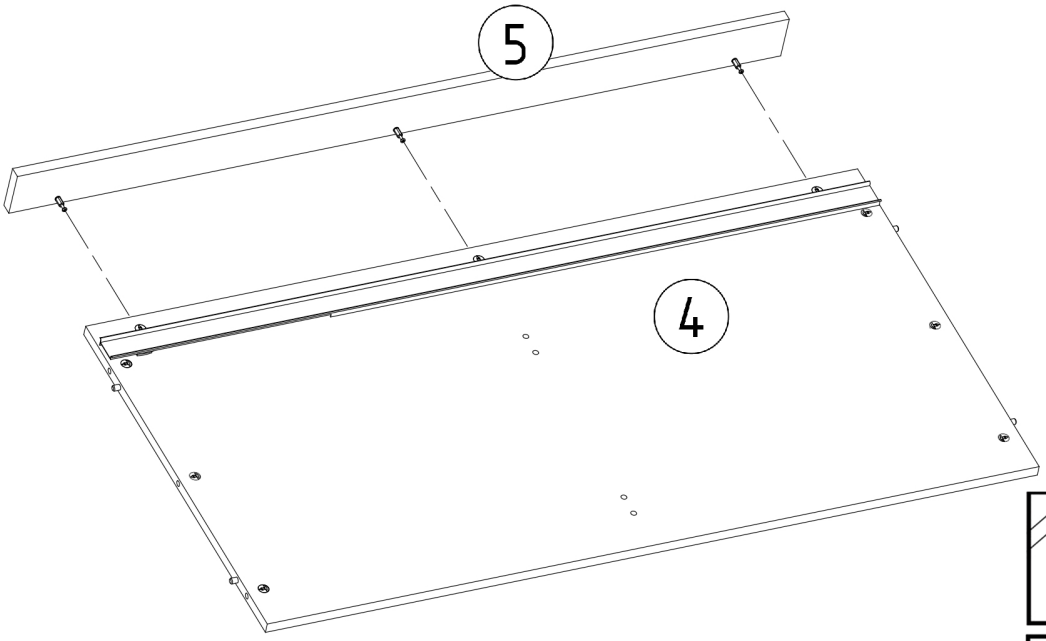

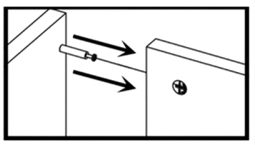

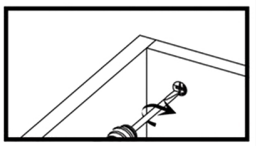

E1



8x30mm x4

T1



x2

V12



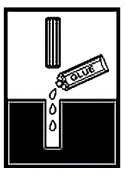

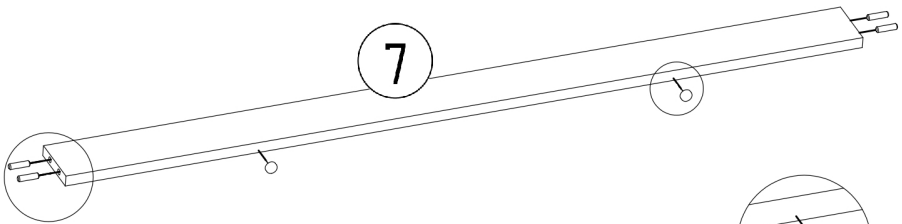

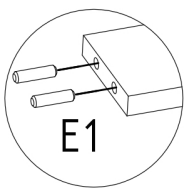

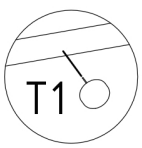

F1	F3
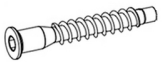	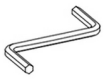
7x50mm x2	x1

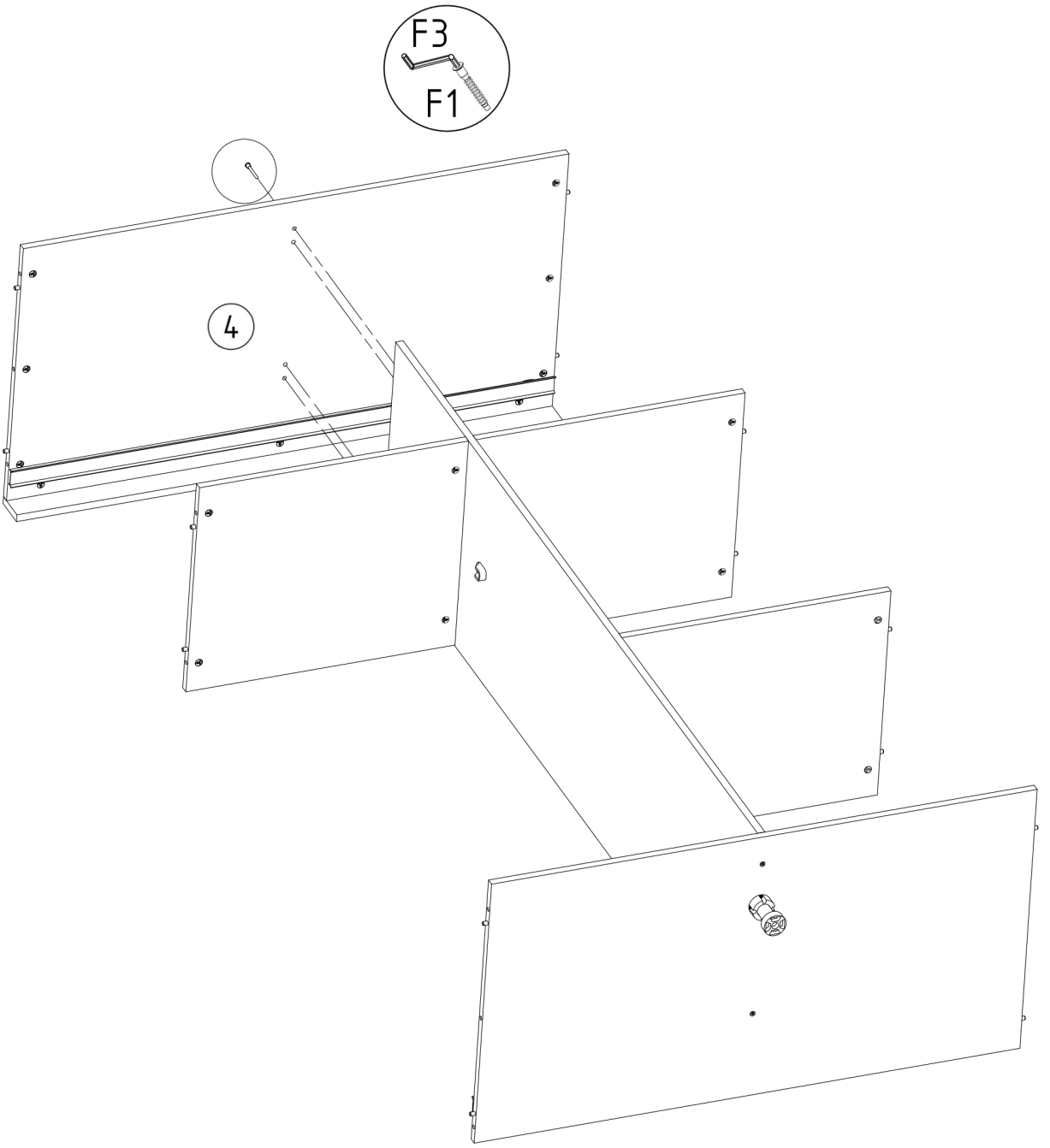

N1	T1	S1	V19
L=35mm x8	x2	3,5x16mm x1	x1

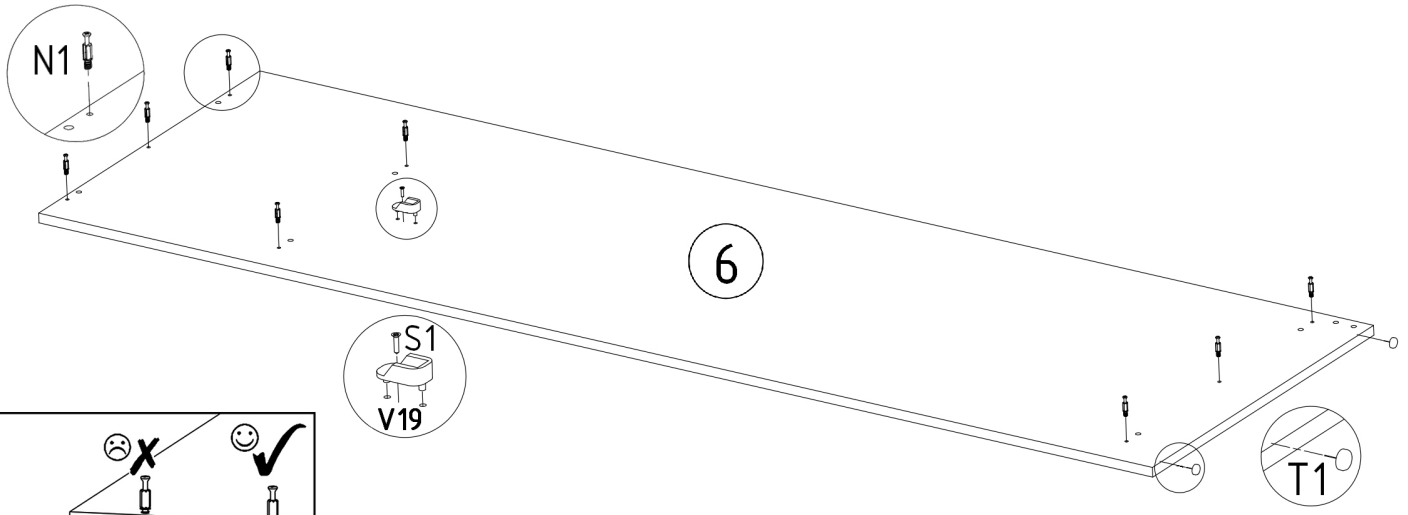

V12

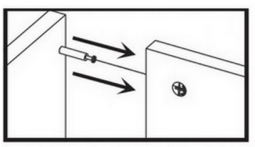

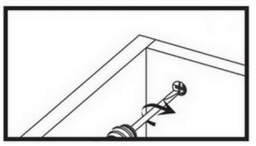

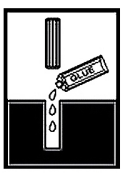

N1	V16	T1
		
L=35mm x10	5x16mm x4	x2

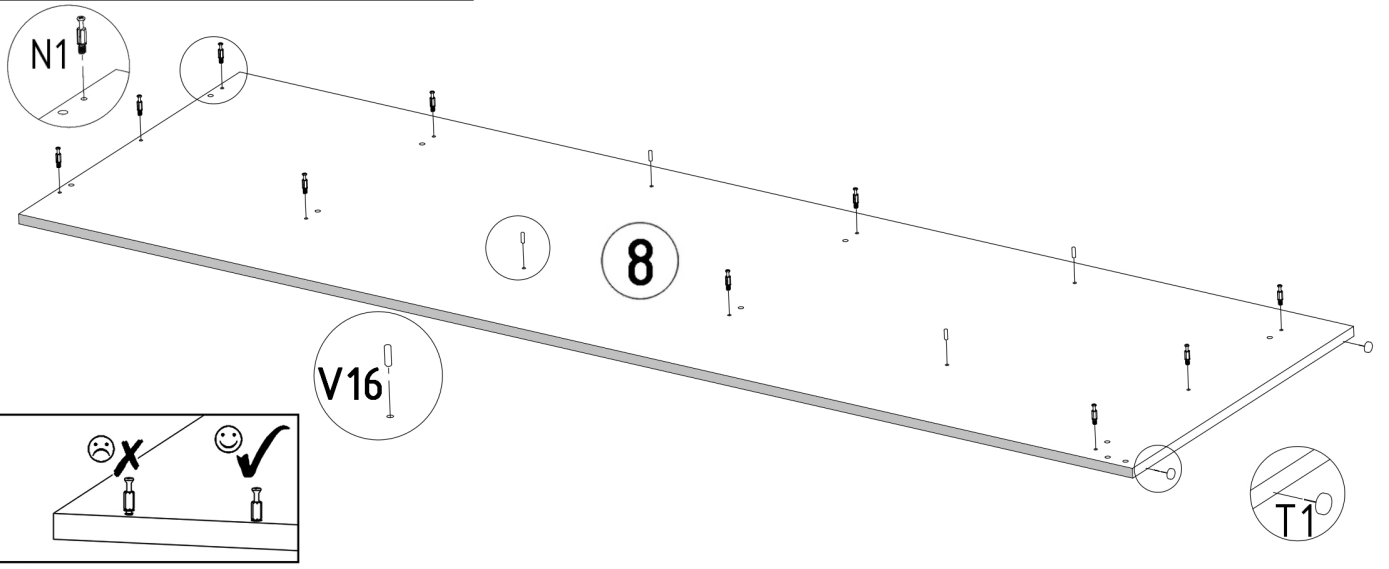

V12



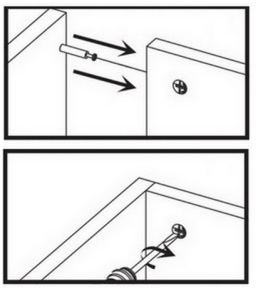

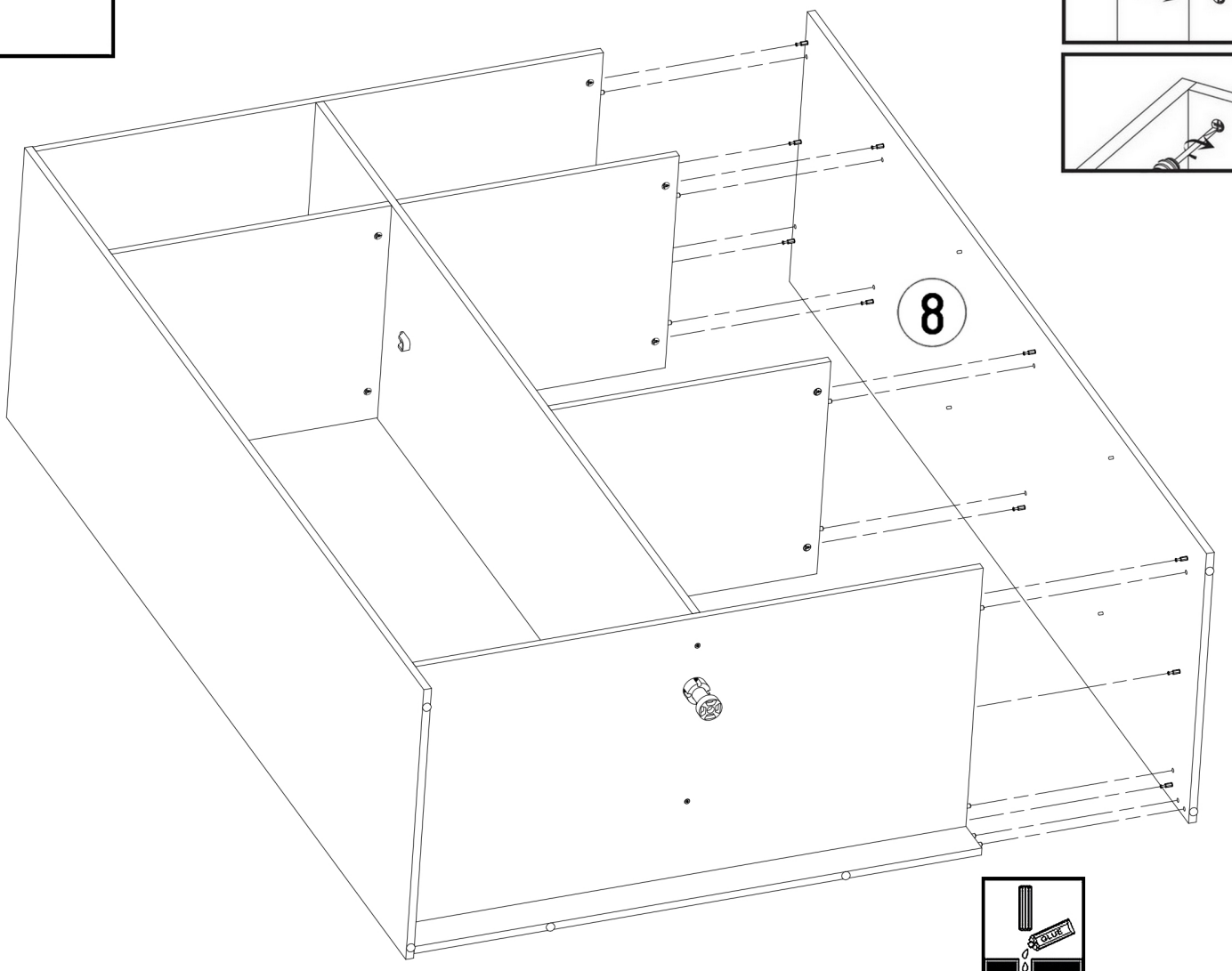

V15	S1	S6	Z1	V25
x16	3,5x16mm x4	2,5x20 x16	x150	x2

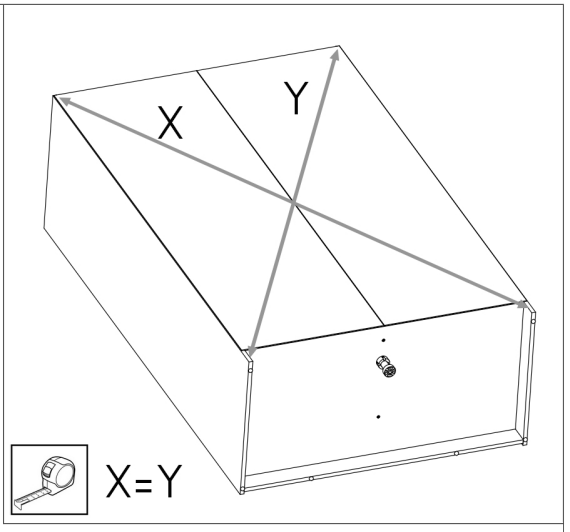

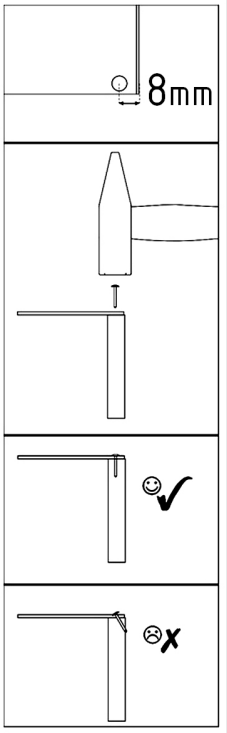

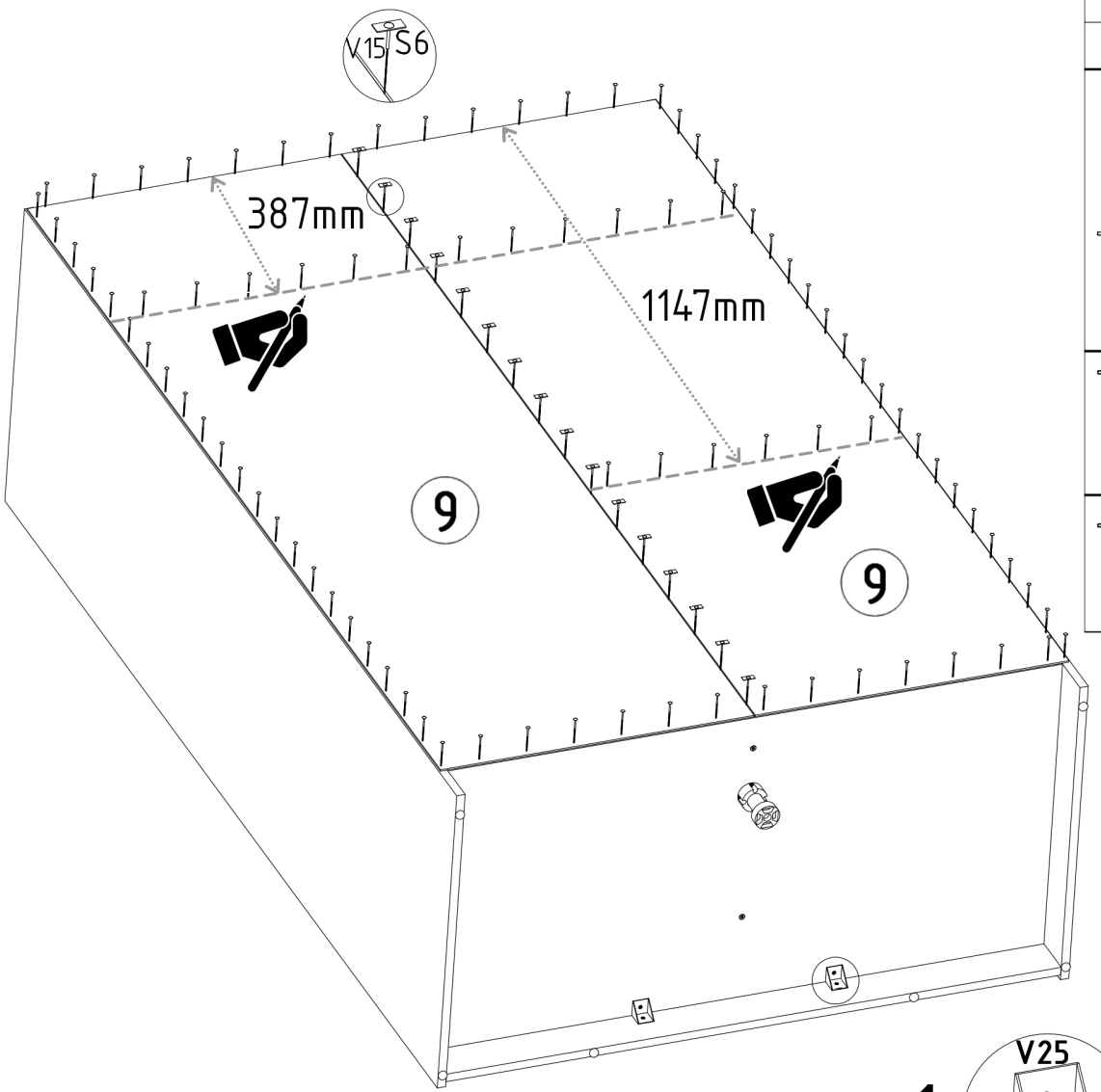

1

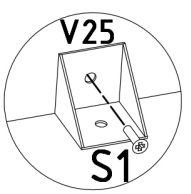

2

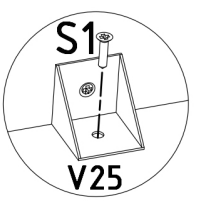

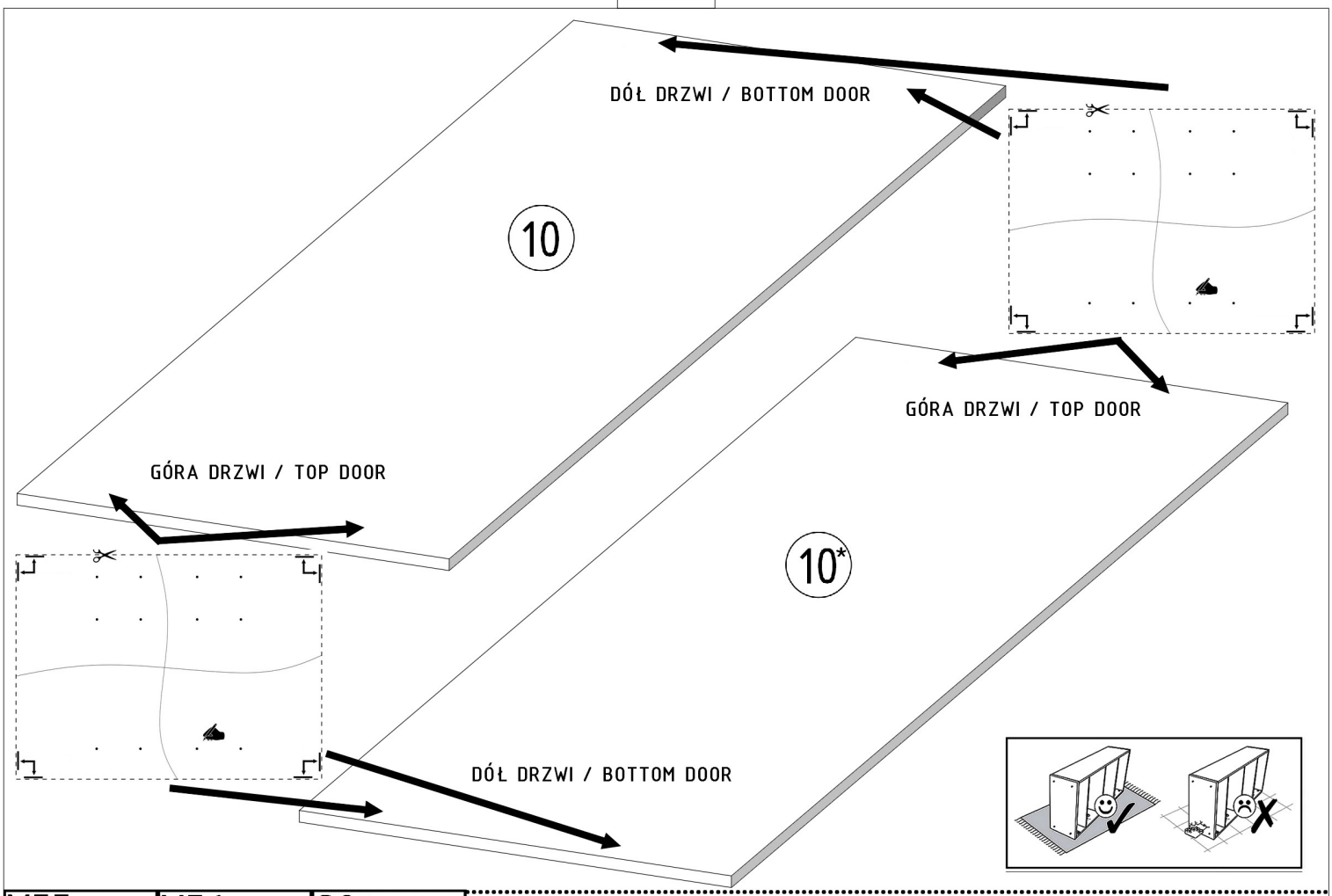
DÓŁ DRZWI / BOTTOM DOOR
10
GÓRA DRZWI / TOP DOOR
GÓRA DRZWI / TOP DOOR
10*
DÓŁ DRZWI / BOTTOM DOOR

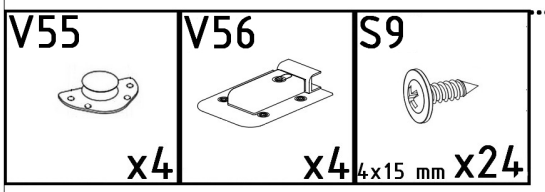
V55
x4
V56
x4
S9
4x15 mm x24

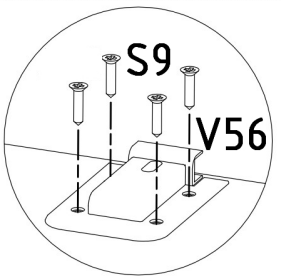
S9
V56

10
10*
S9
V55

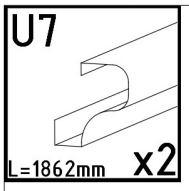
U7
L=1862mm
x2

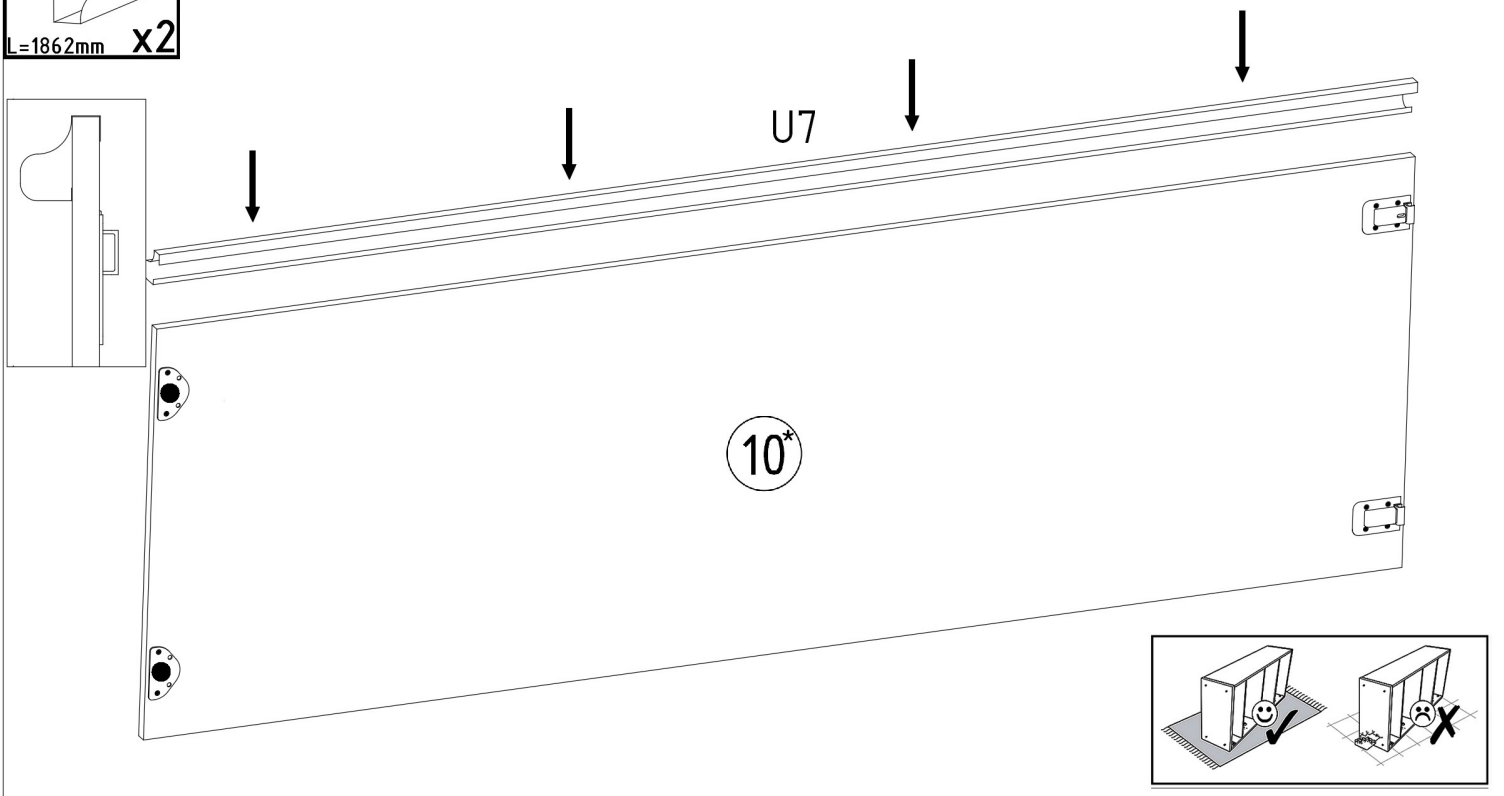
U7
10*

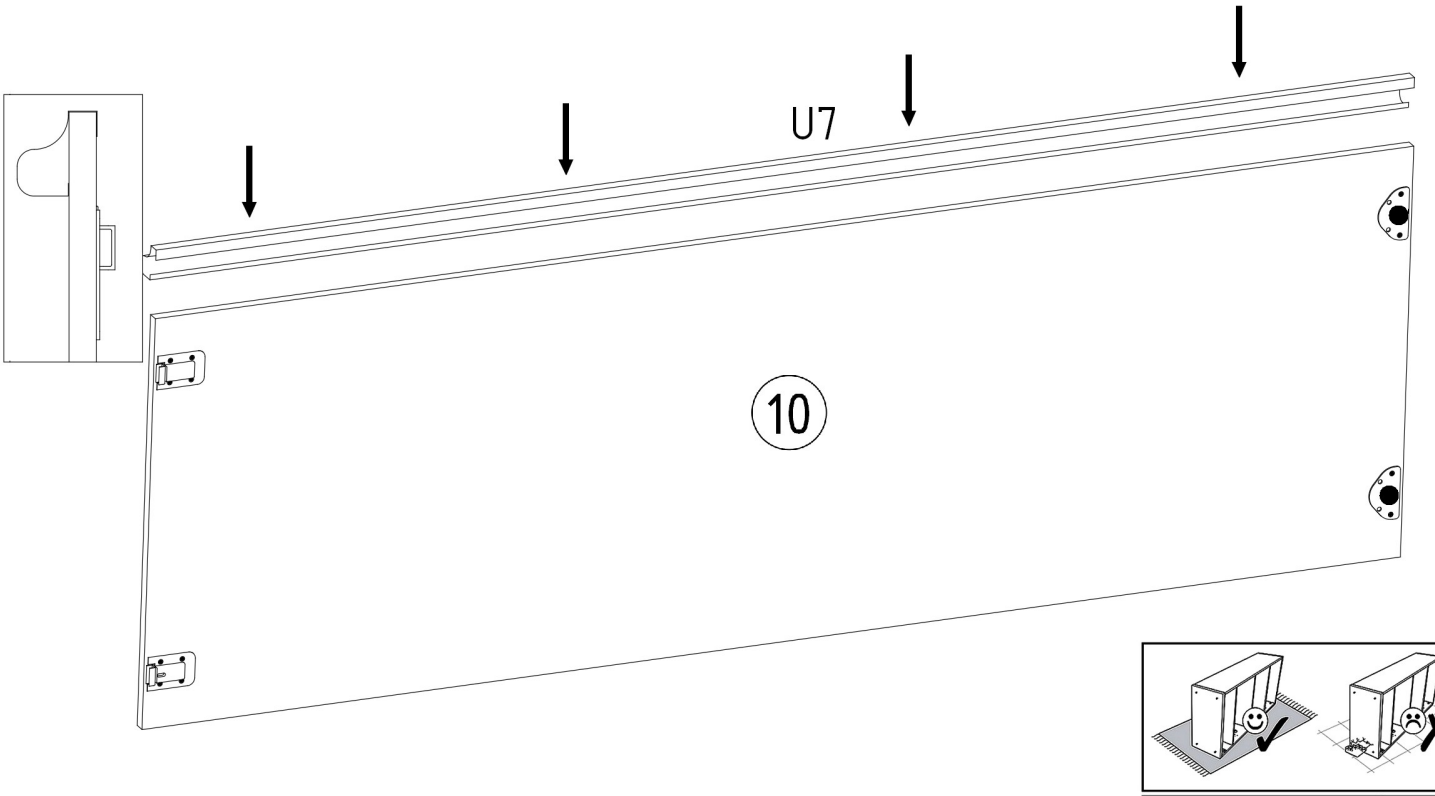
U7
10

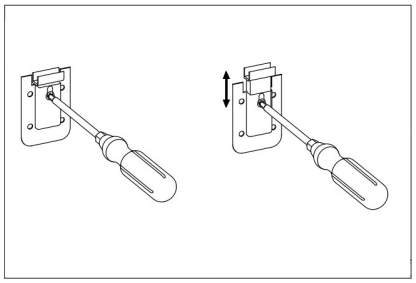

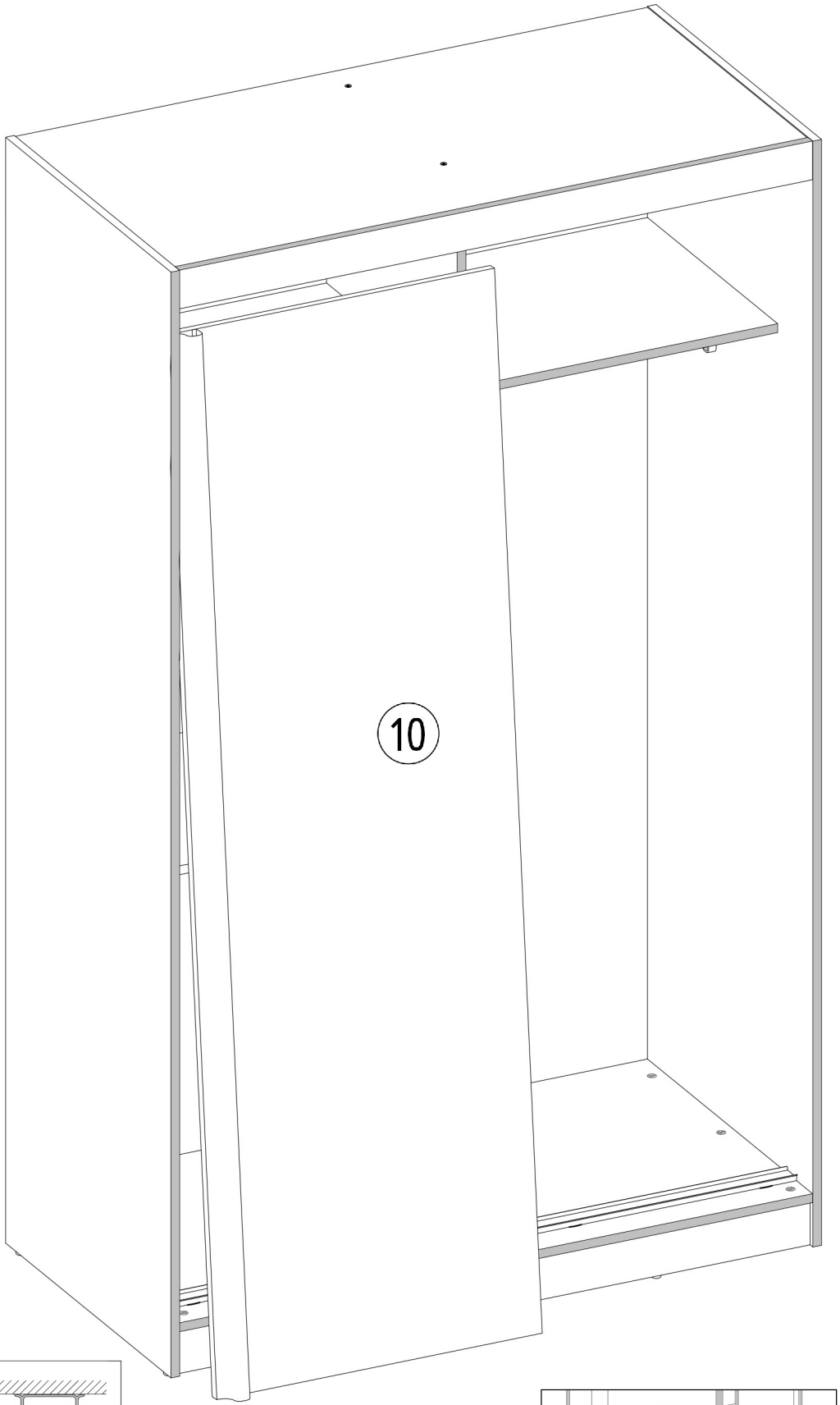
10

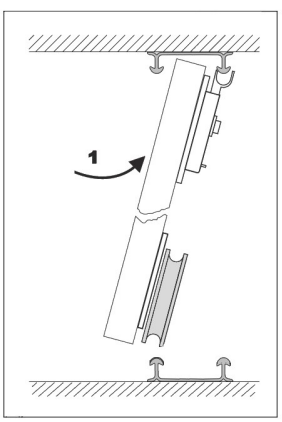
1

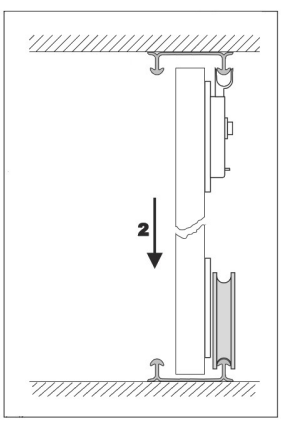
2

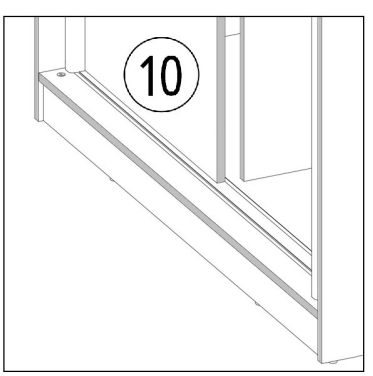
10

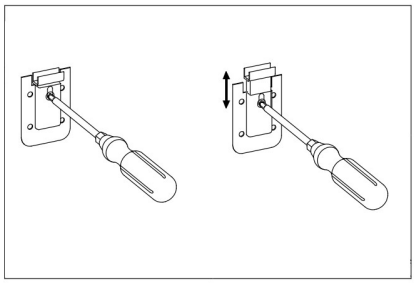

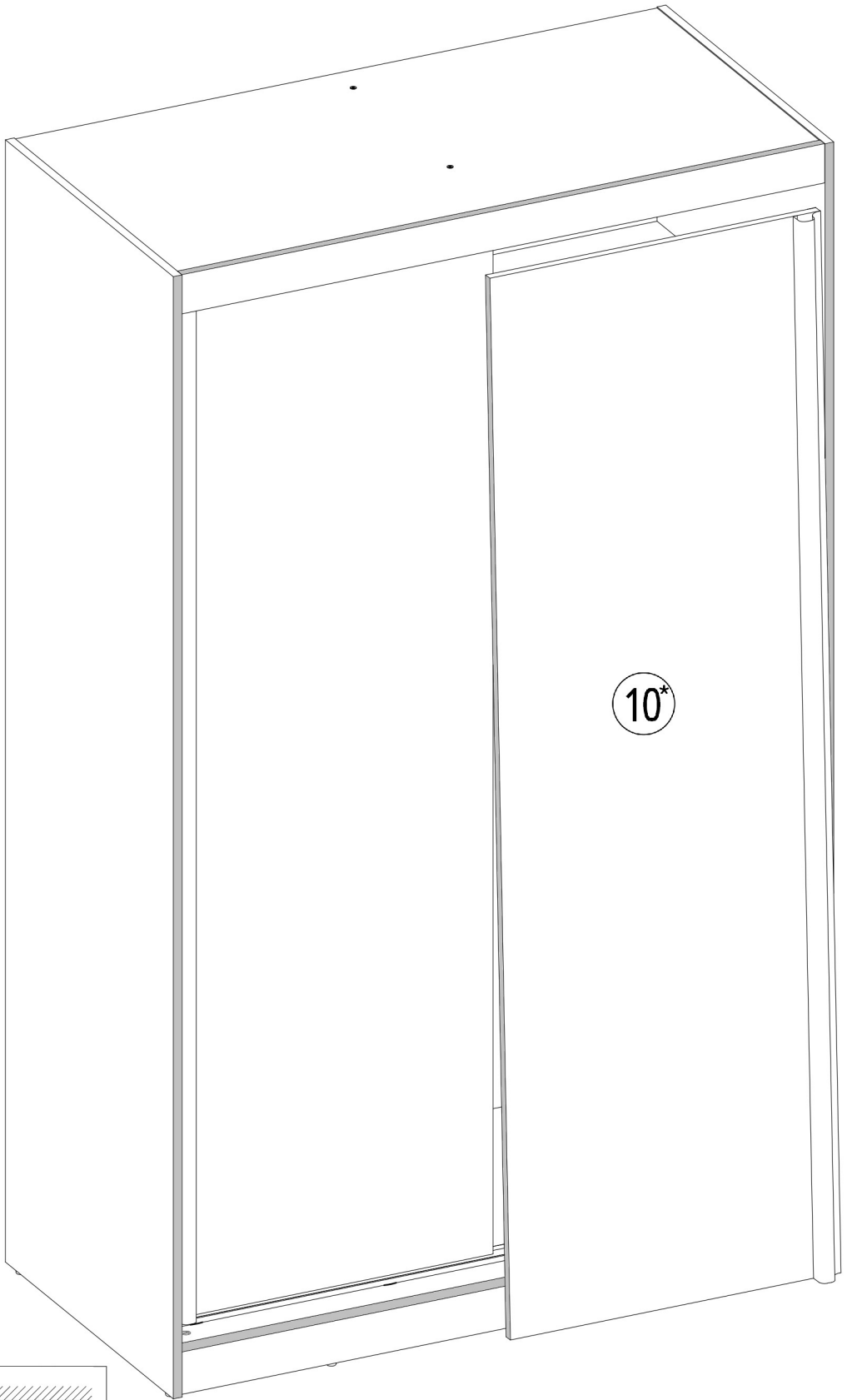
10*

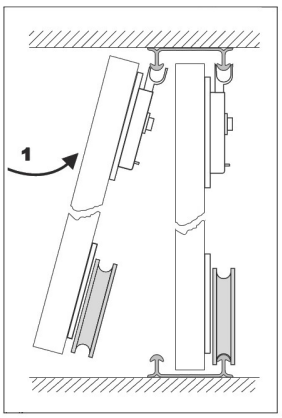
1

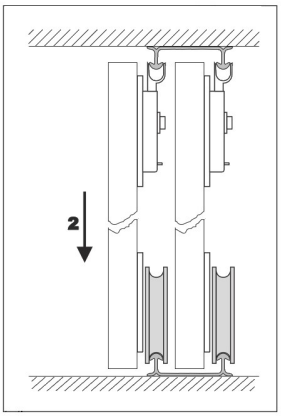
2

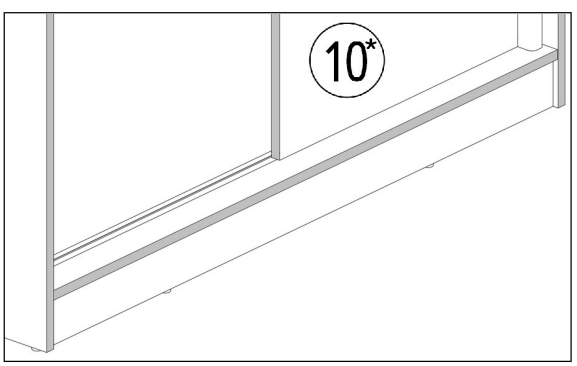
10*

V41	S1	V8	B1
 x1	 3,5x16mm x2	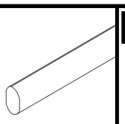 x1	 ø17/4mm x5

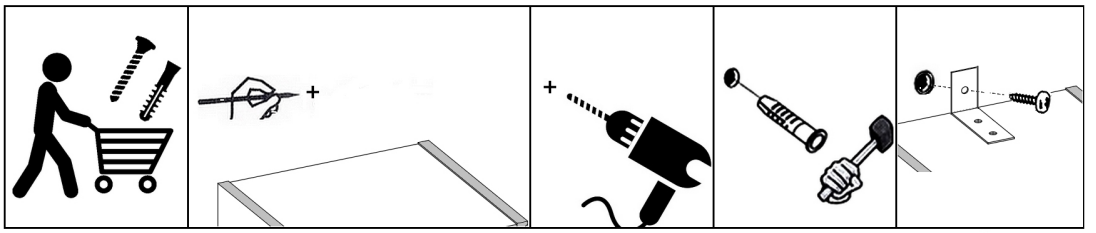



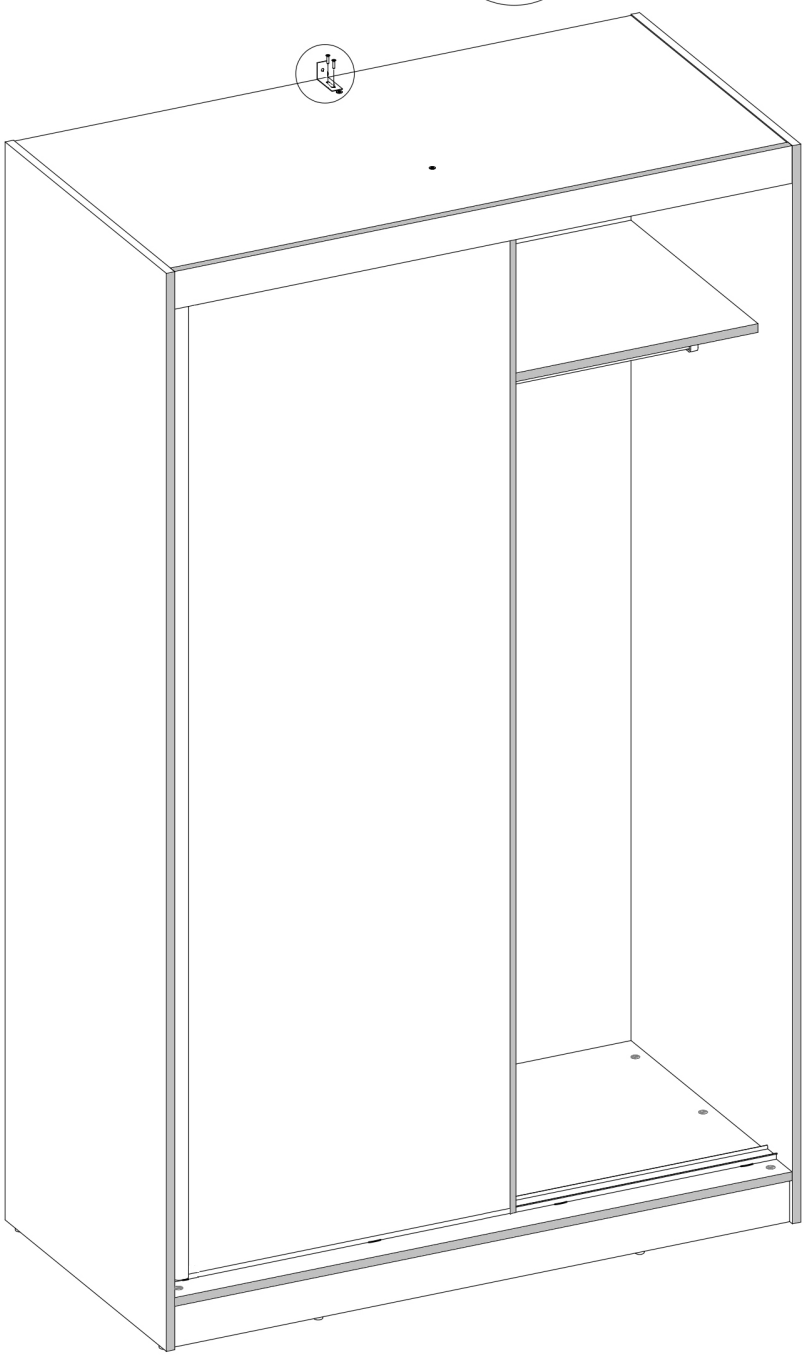

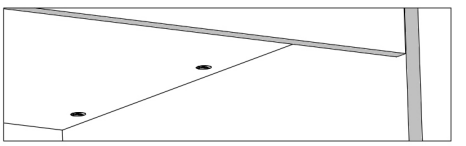

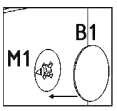

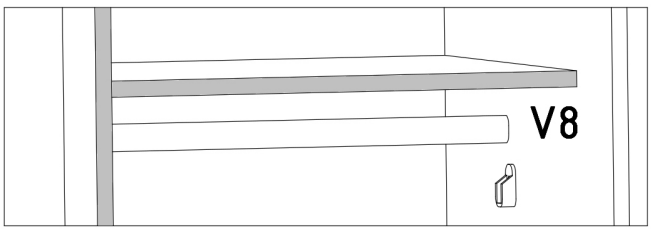

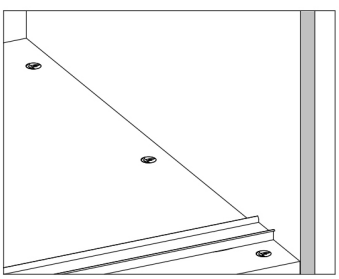

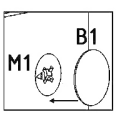

B1



ø17/4mm x5

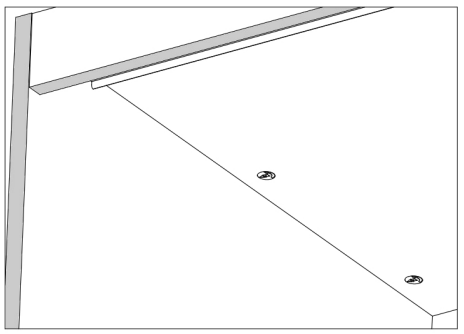

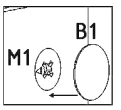

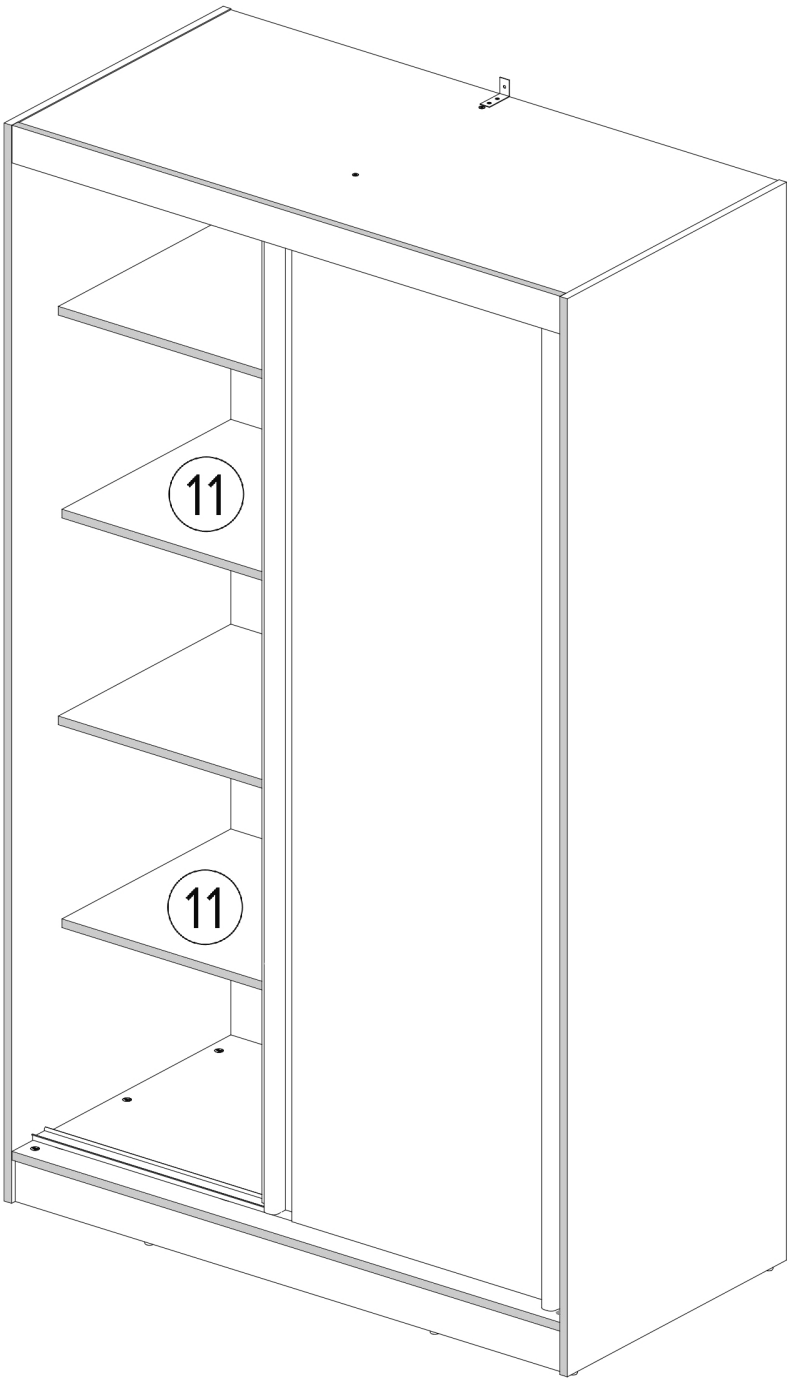

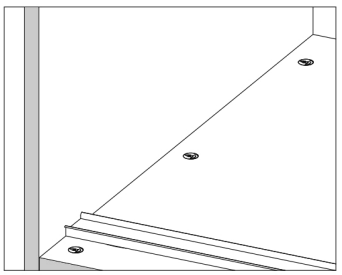

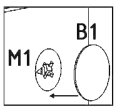

V50



x4

V50

