INSTRUKCJA MONTAŻU

# Komoda 70 cm z 2 parami drzwiczek i 2 szufladami, bez uchwytów

Kolor: Biały

Kod produktu: OR10226

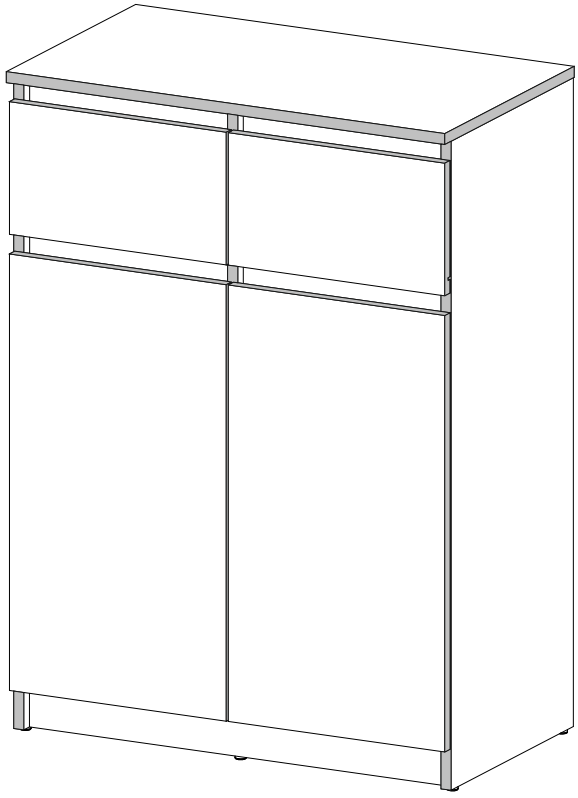

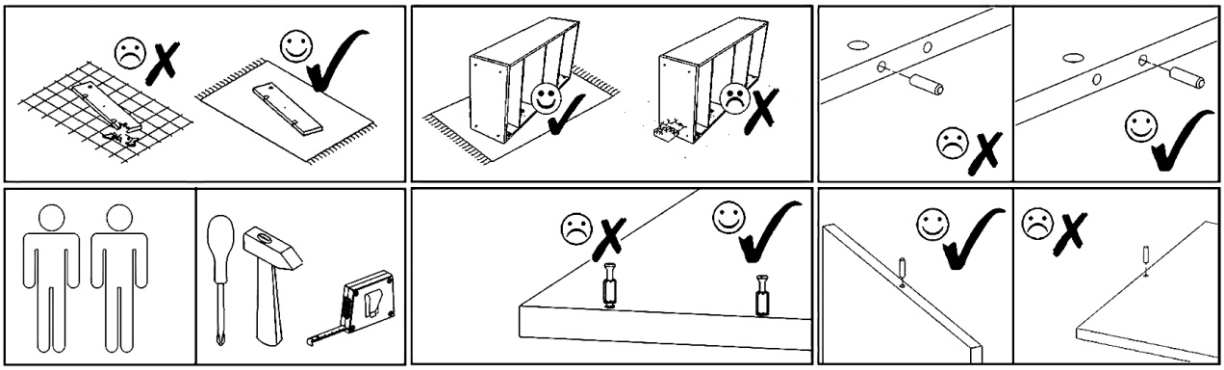

| | | | | | | | |
|---|---|---|---|---|---|---|---|
| E1<br>8x30mm x20 | F1<br>7x50mm x6 | F3<br>Hex 4mm x1 | V16<br>5x16mm x8 | N1<br>L=35mm x16 | M1<br>12x15mm x16 | T1<br>x5 | P3<br>L=350mm x2 |
| E3<br>8x50mm x4 | A1<br>ZP x4 | Z1<br>x70 | R1<br>6x8mm x8 | S1<br>3,5x16mm x16 | B1<br>B<br>ø17/4mm x4 | V12<br>GLUE<br>x1 | V15<br>x10 |
| V13<br>x1 | | | | | | | |

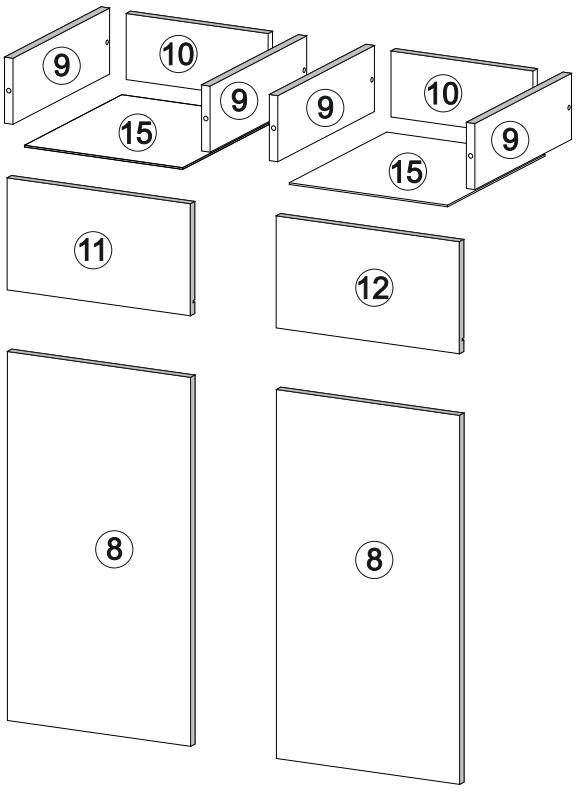


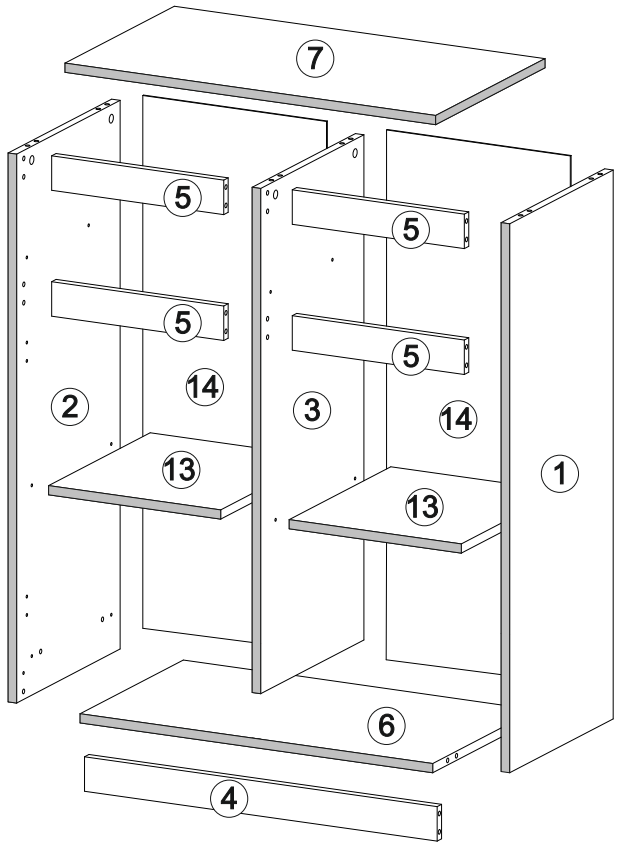


| 001875 | 1 | 1 |
|---|---|---|
| 001874 | 2 | 1 |
| 001876 | 3 | 1 |
| 000145 | 4 | 1 |
| 000041 | 5 | 4 |
| 001878 | 6 | 1 |
| 001877 | 7 | 1 |
| 001879 | 8 | 2 |
| 000053 | 9 | 4 |
| ID | NUMBER | QUANTITY |

| 001930 | 10 | 2 |
|---|---|---|
| 001880 | 11 | 1 |
| 001929 | 12 | 1 |
| 000040 | 13 | 2 |
| 000371 | 14 | 2 |
| 001931 | 15 | 2 |

| E1 | N1 | T1 | M1 | P3 | R1 | V16 |
|---|---|---|---|---|---|---|
| 8x30mm x4 | L=35mm x6 | x4 | 12x15mm x4 | L=350mm x2 | 6x8mm x4 | 5x16mm x4 |

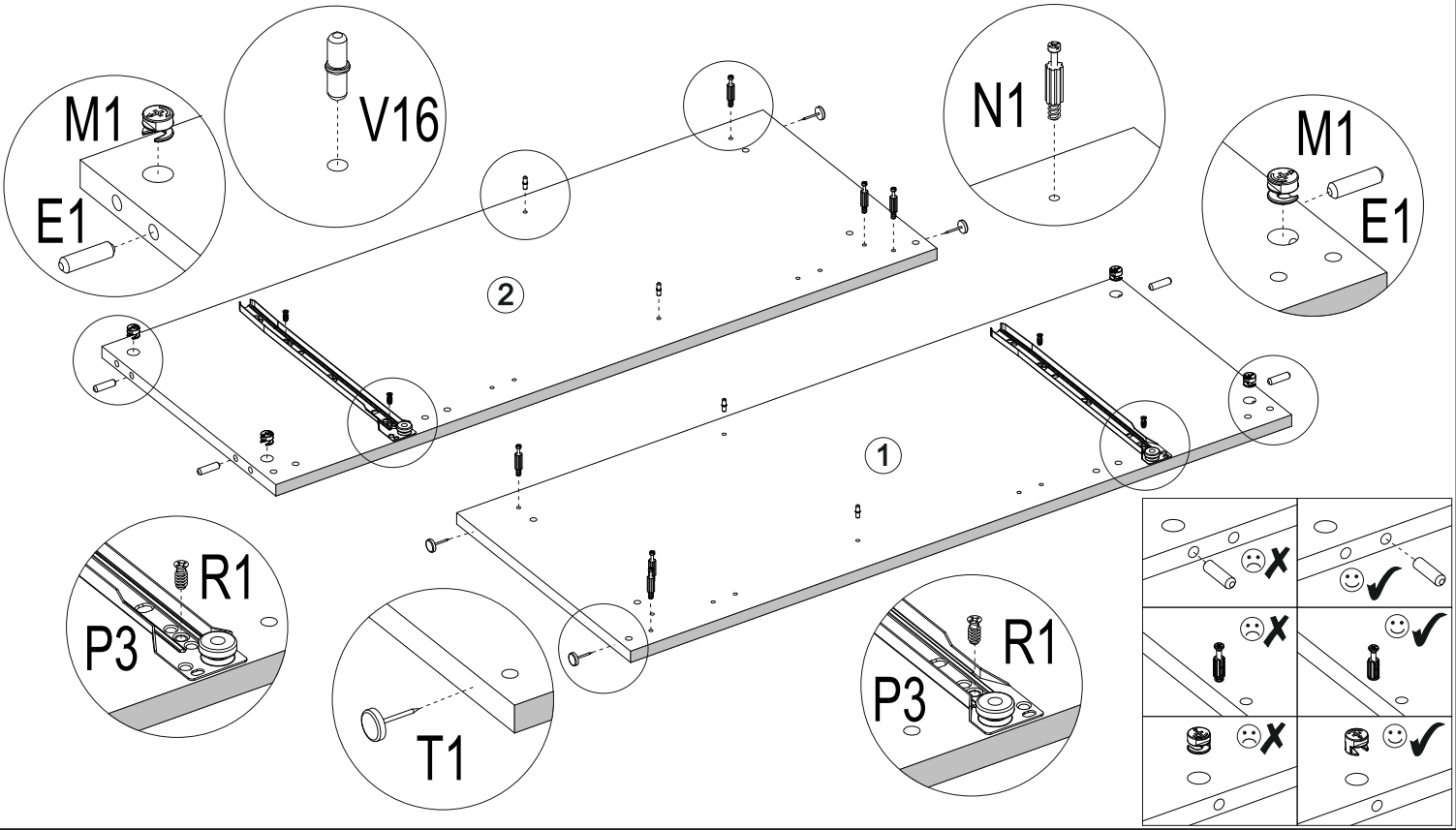




| E1 | V16 | M1 | P3 | R1 |
|---|---|---|---|---|
| 8x30mm x2 | 5x16mm x4 | 12x15mm x2 | L=350mm x2 | 6x8mm x4 |

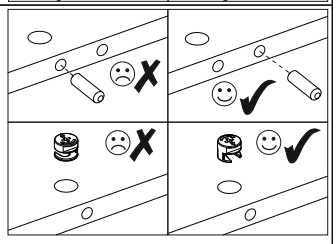

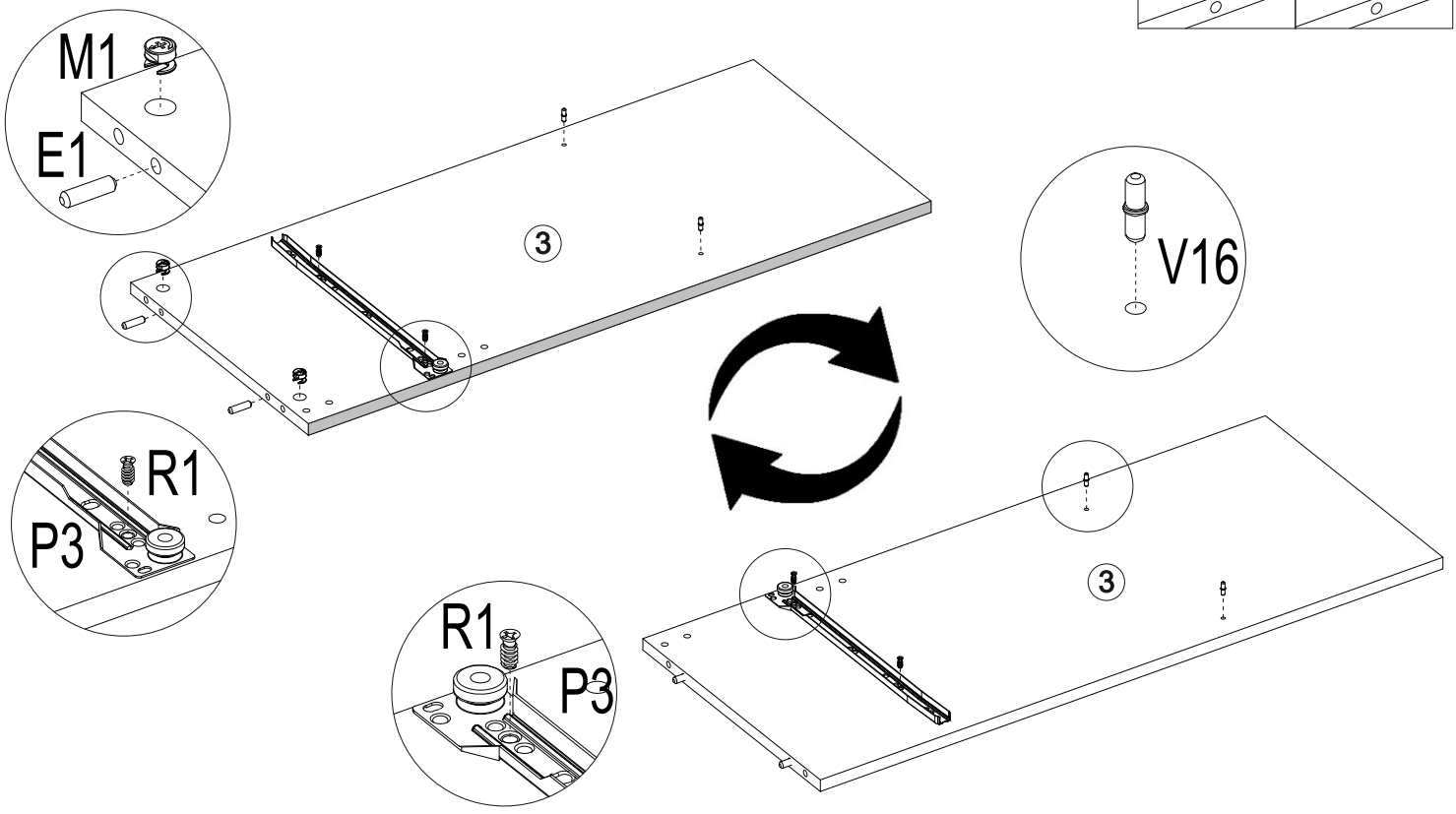

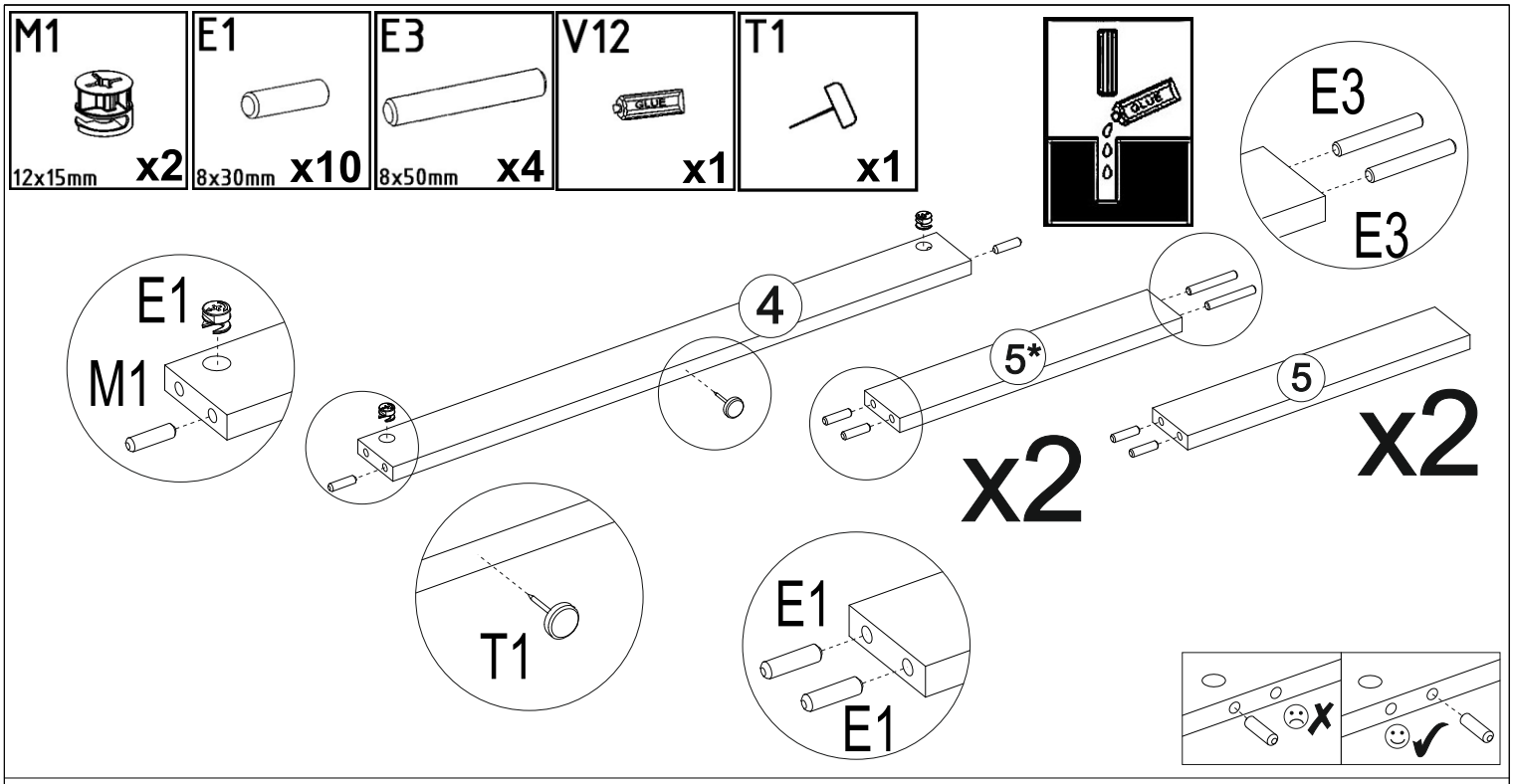
M1
12x15mm x2
E1
8x30mm x10
E3
8x50mm x4
V12
x1
T1
x1
GLUE
E3
E3
E1
M1
4
5*
5
x2
x2
T1
E1
E1

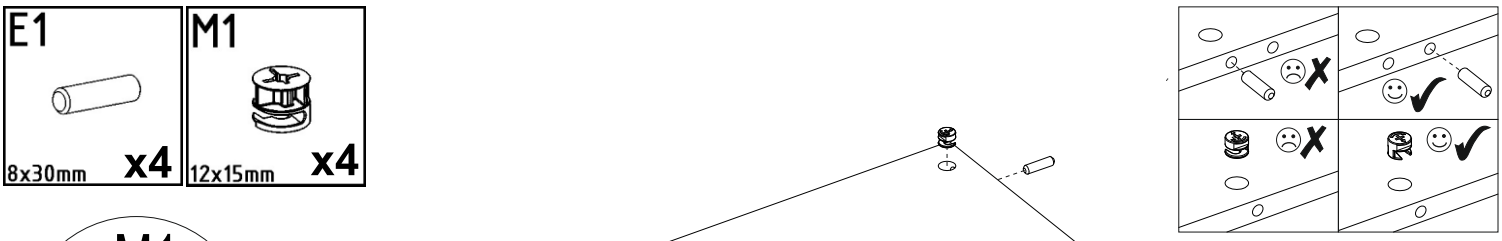
E1
8x30mm x4
M1
12x15mm x4
M1
E1
6

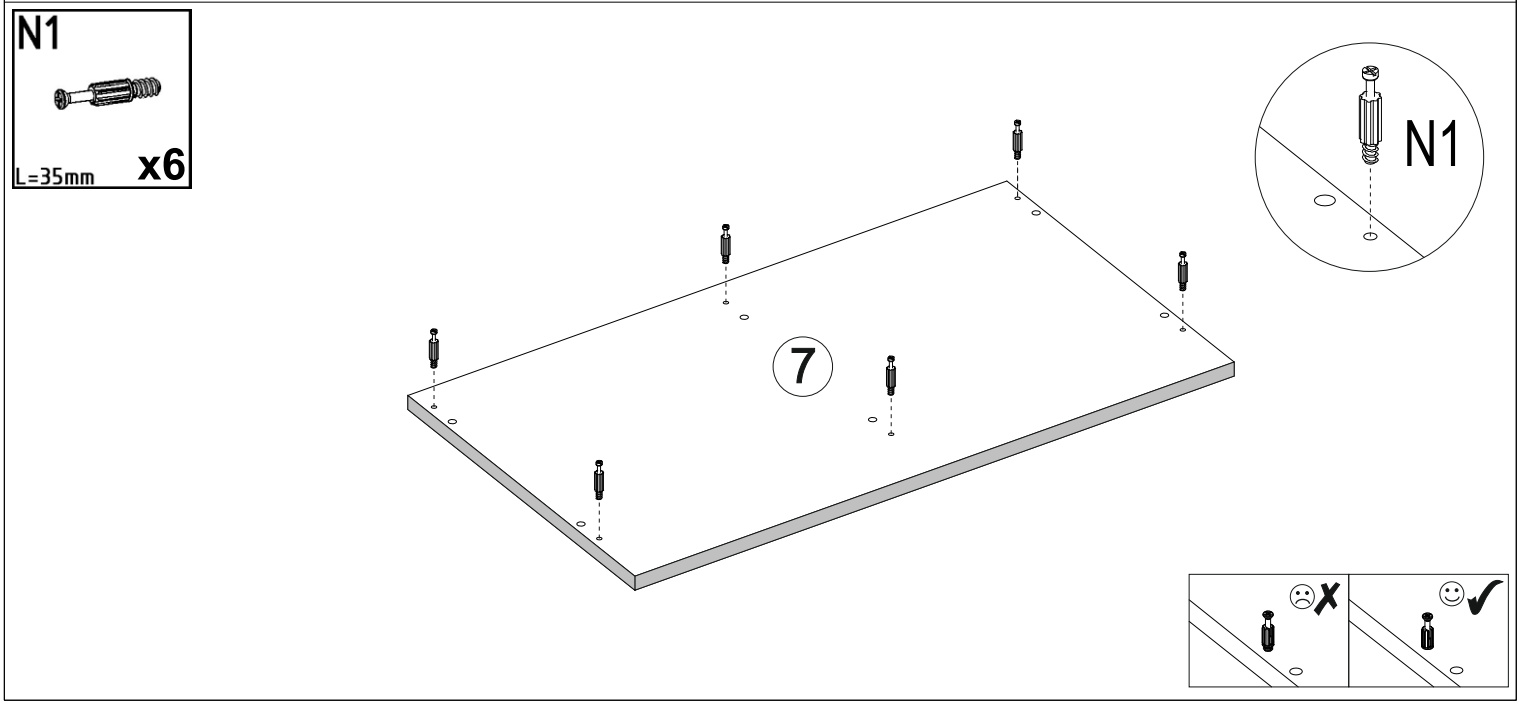
N1
L=35mm x6
N1
7

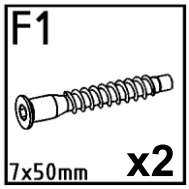
F1
7x50mm
x2

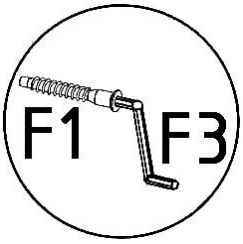
F1
F3


3
6

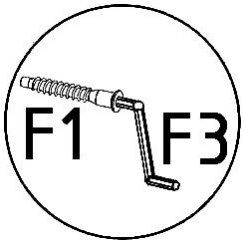
F1
F3

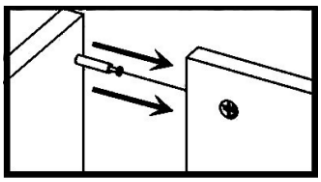

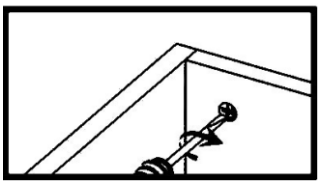

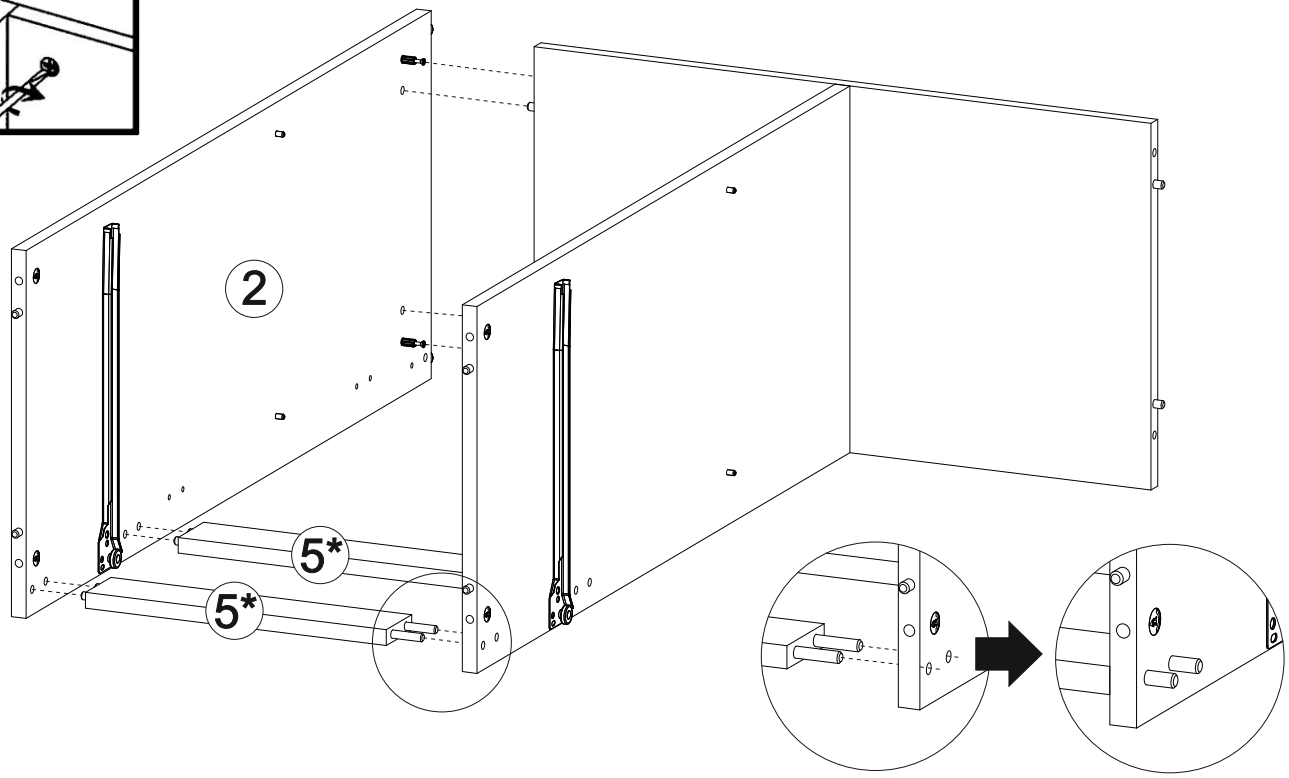
2
5*
5*

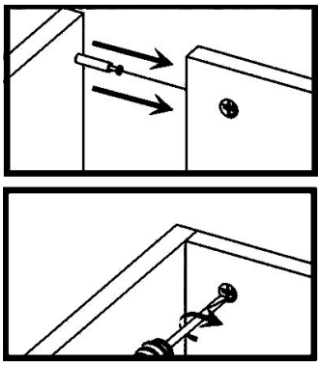



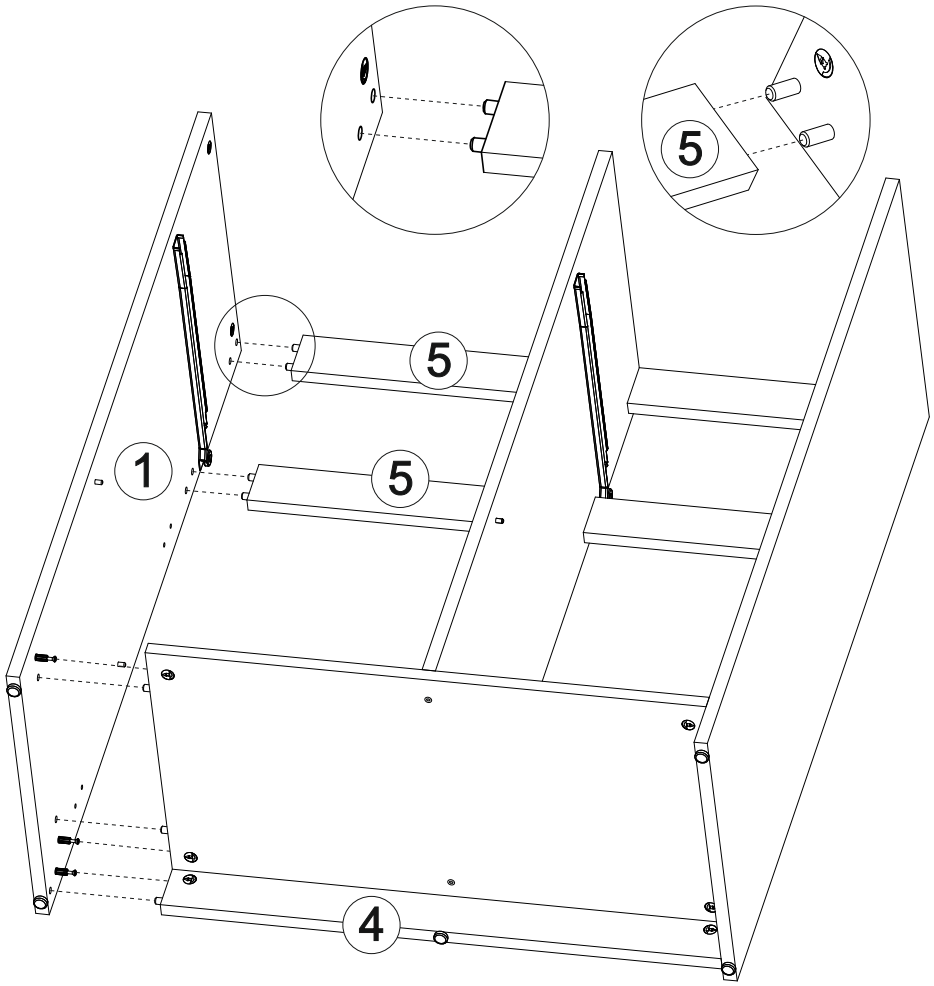
5
5
1
5
4

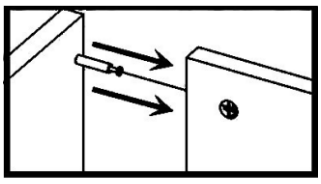

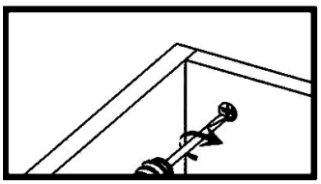

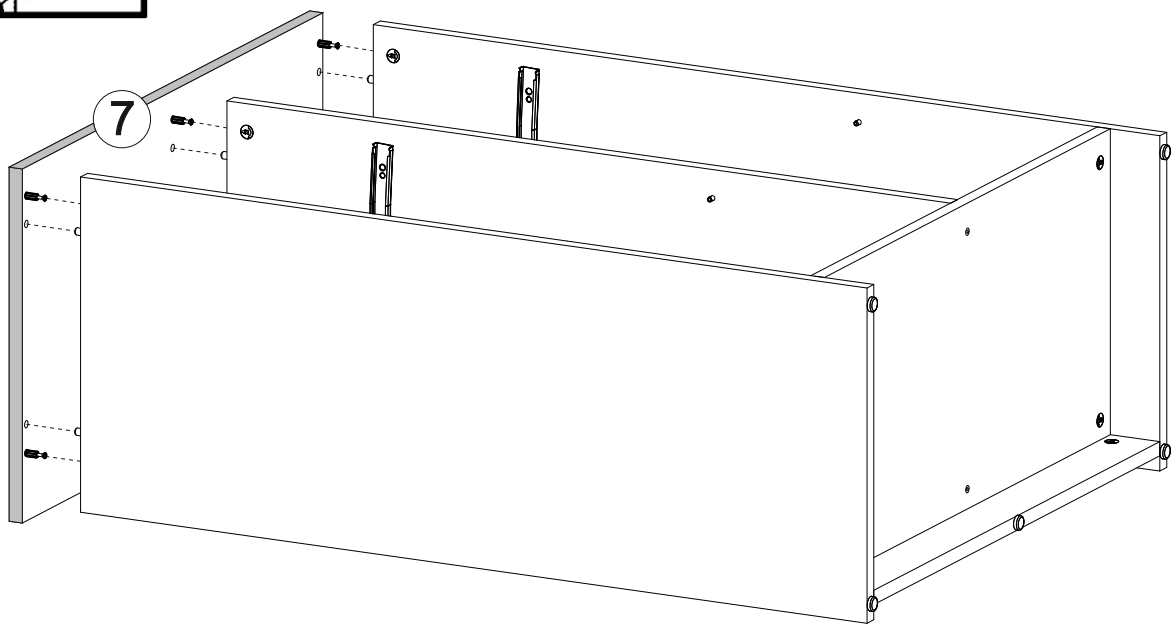
7

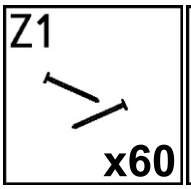
Z1
x60

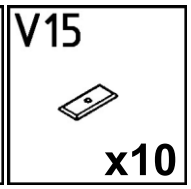
V15
x10

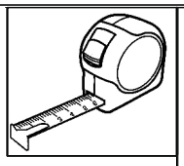

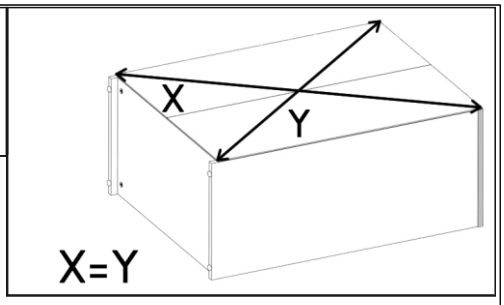
X
Y
X=Y

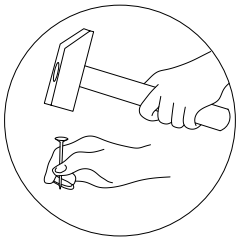


V15
Z1

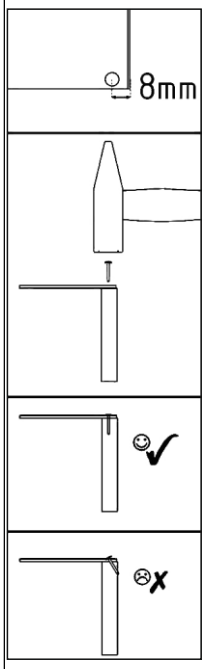
8mm

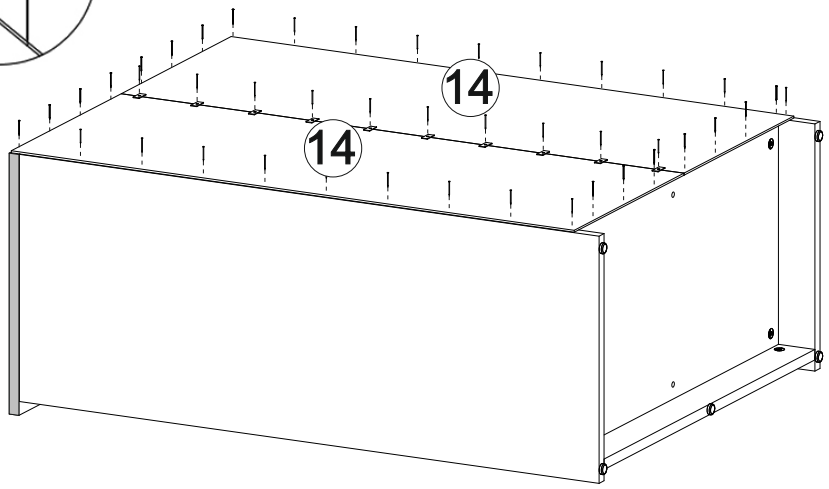
14
14

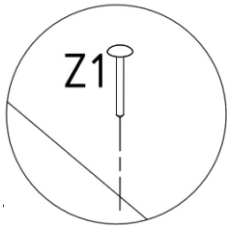
Z1

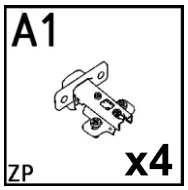
A1
ZP
x4

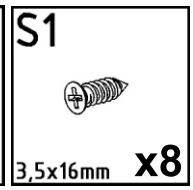
S1
3,5x16mm
x8

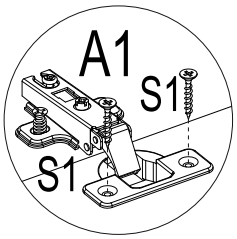
A1
S1
S1

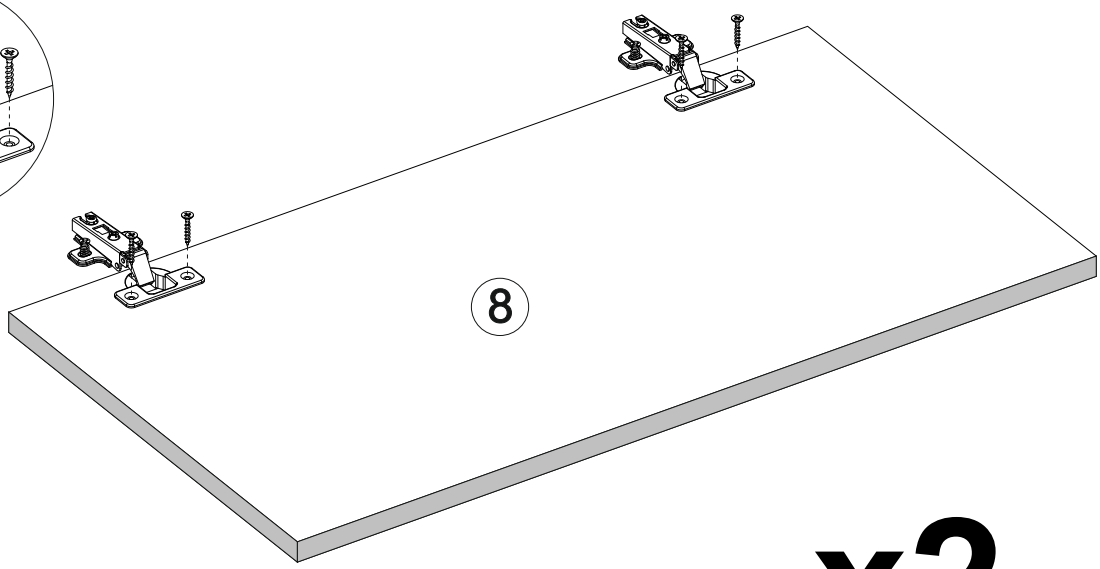
8

x2




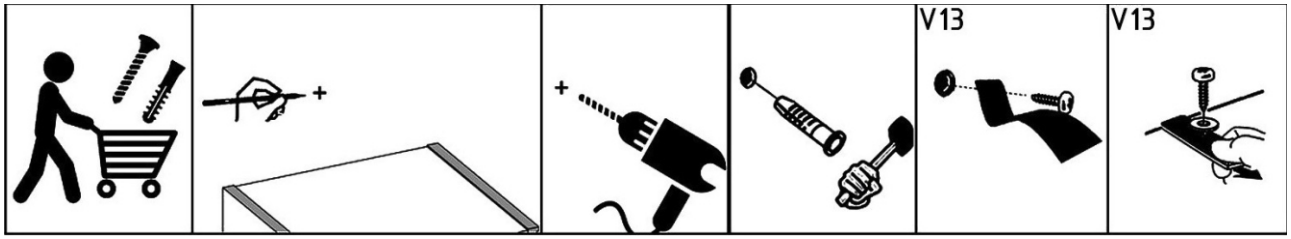


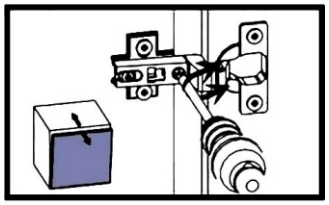

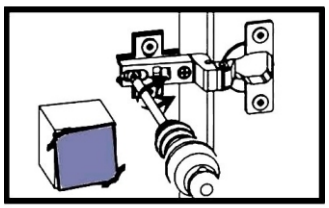

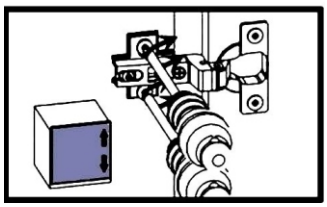

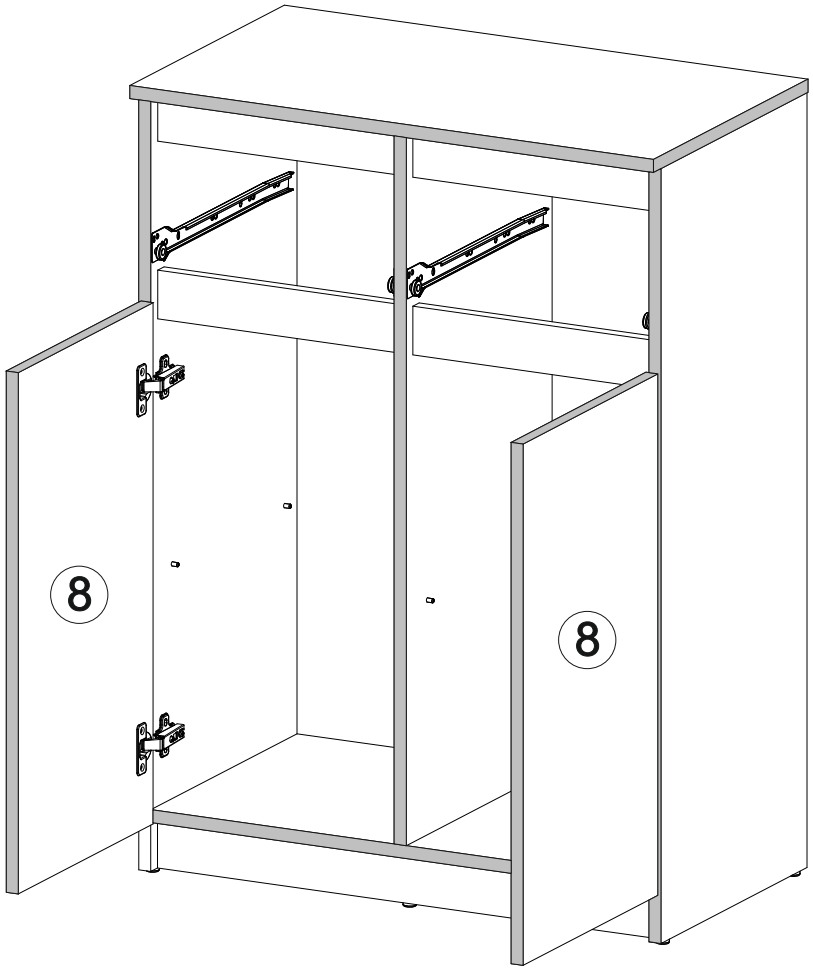


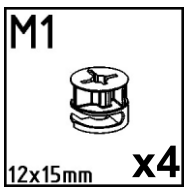


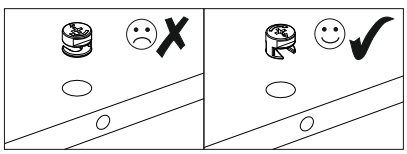

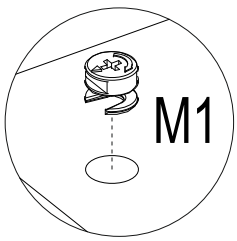


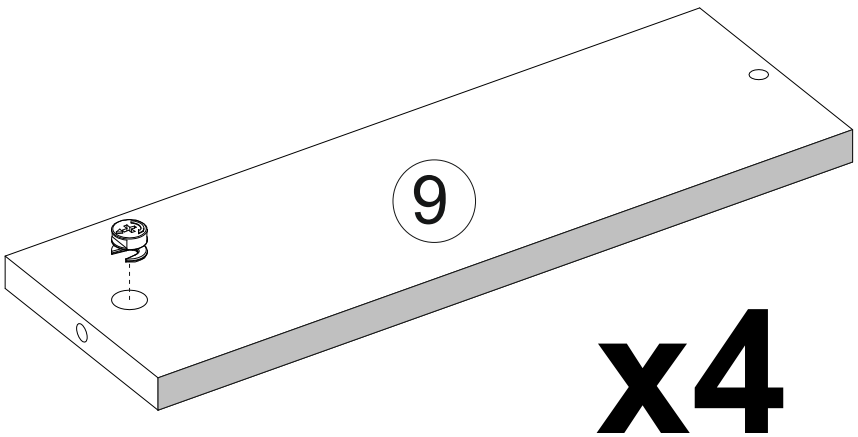


**x4**

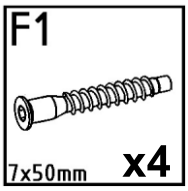
F1
7x50mm
x4

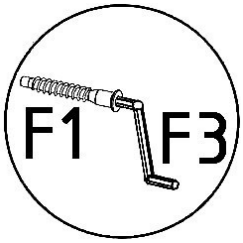
F1
F3

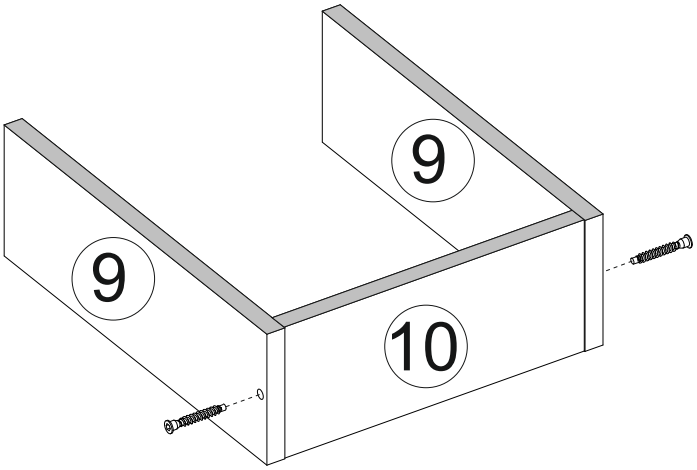
9
9
10

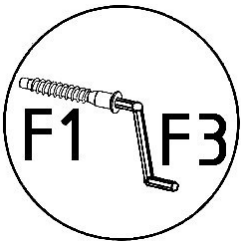
F1
F3

x2


N1
L=35mm
x4

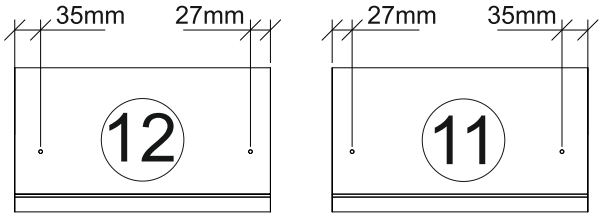
35mm
27mm
12
27mm
35mm
11

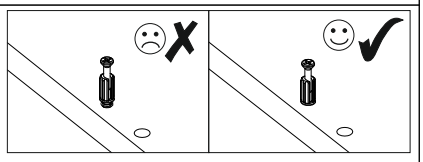

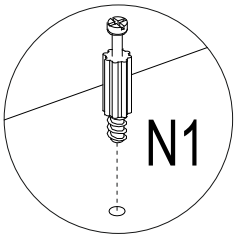
N1

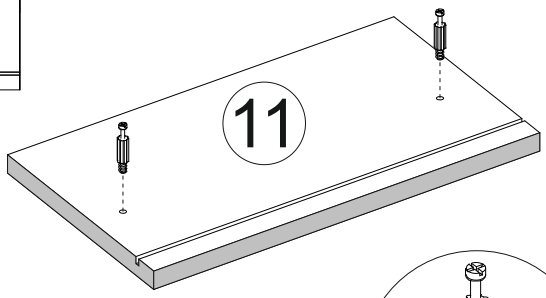
11

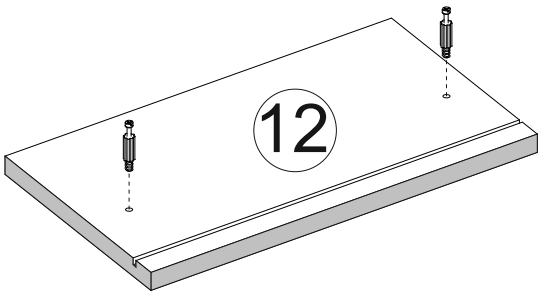
12

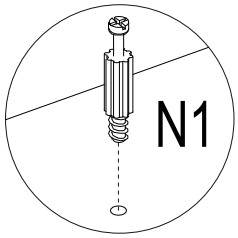
N1

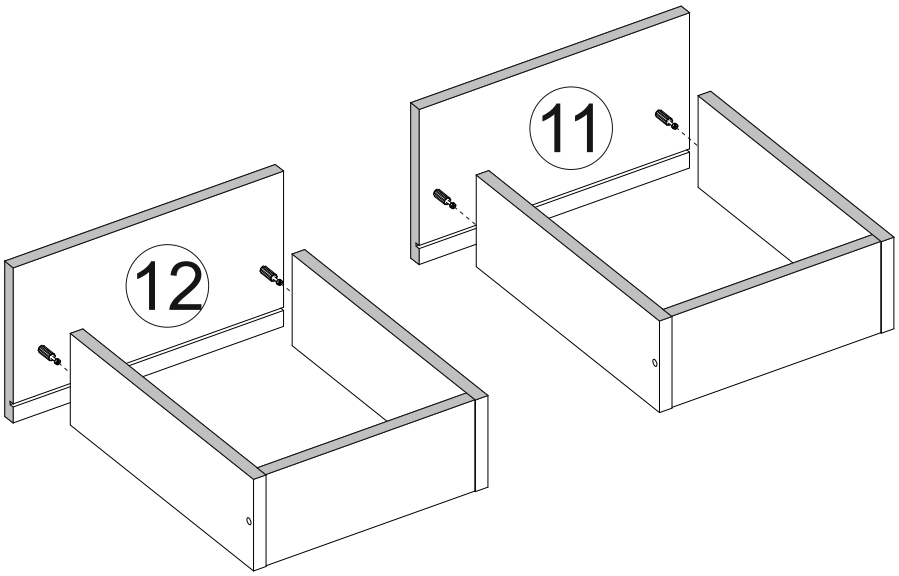
11
12

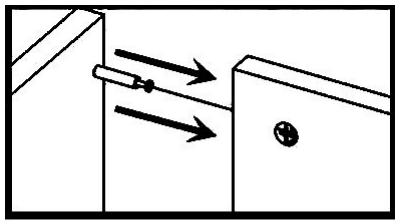

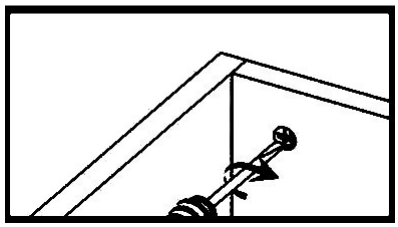

Z1
x10

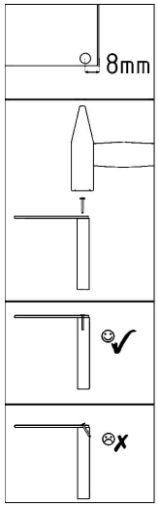


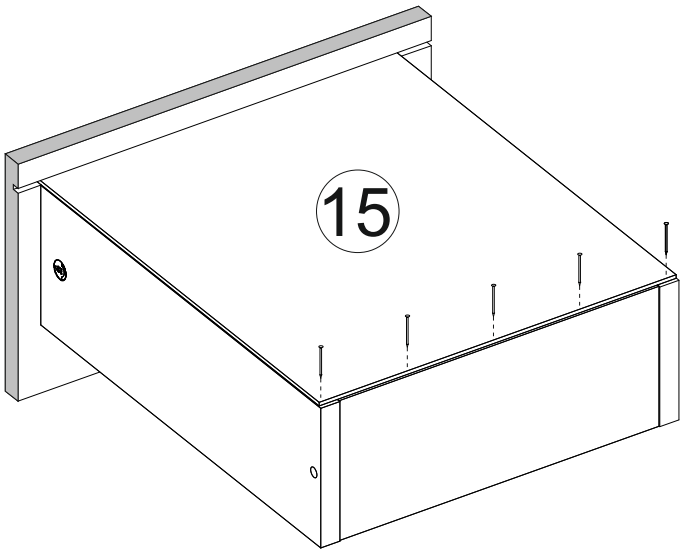


x2

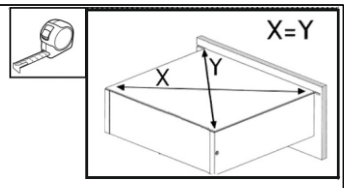


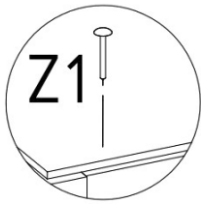


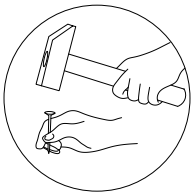

P3
L=350mm x2

S1
3,5x16mm x8

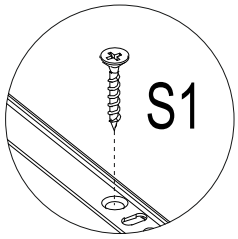


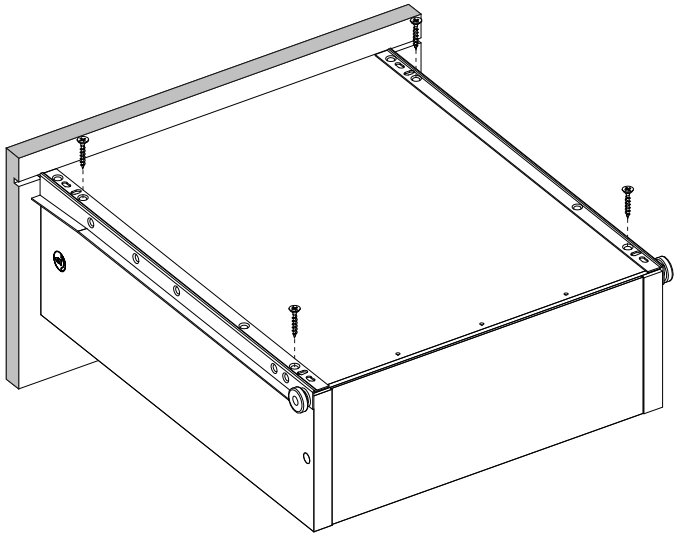

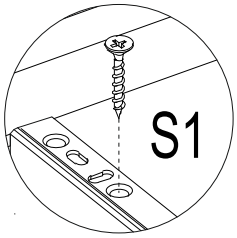


x2

B1
ø17/4mm x4

