INSTRUKCJA MONTAŻU

Regał komorowy 90 cm, 2 × 3 komory, 60 cm wysokości

Kolor: Biały

Kod produktu: OR10410

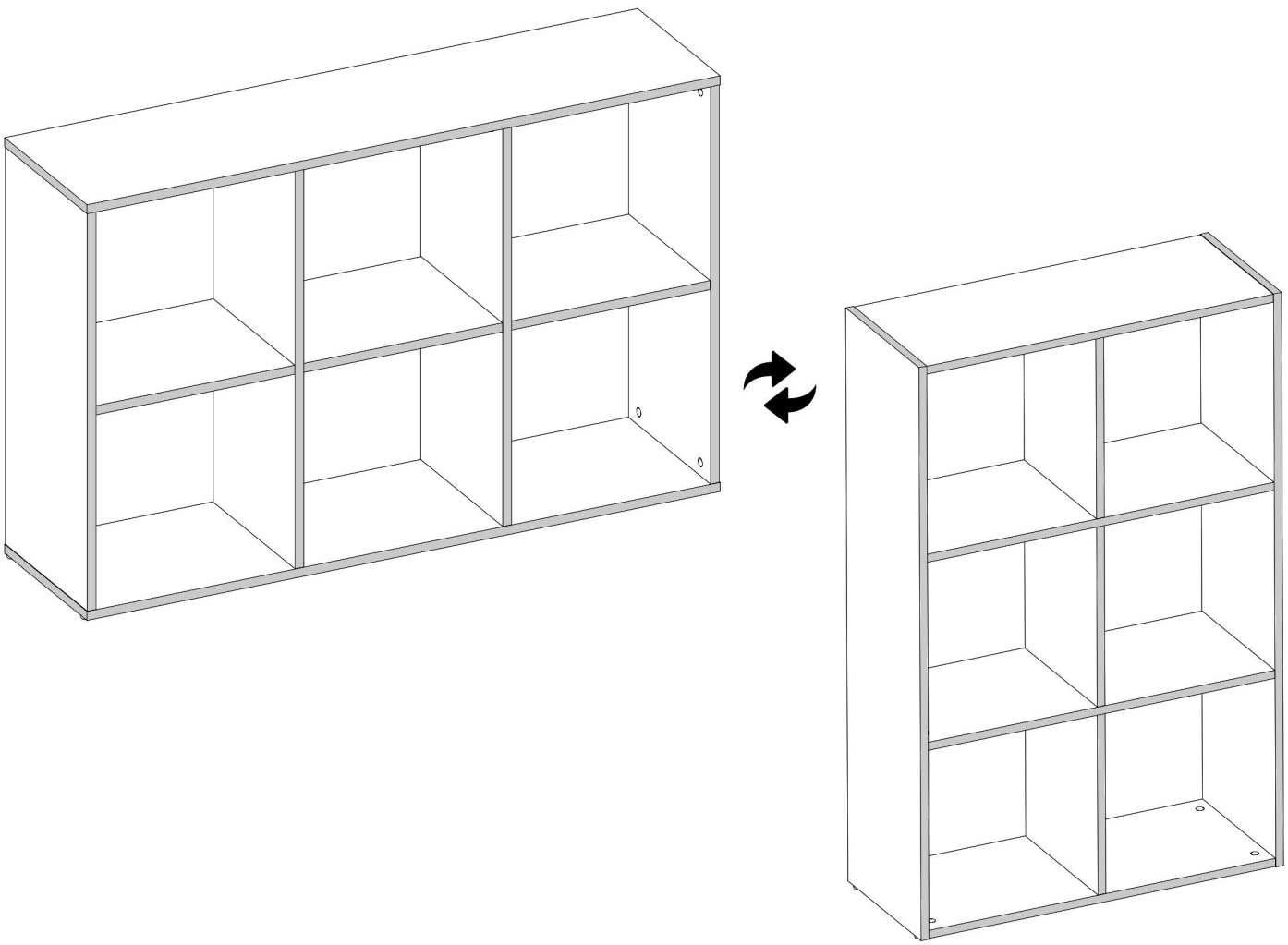

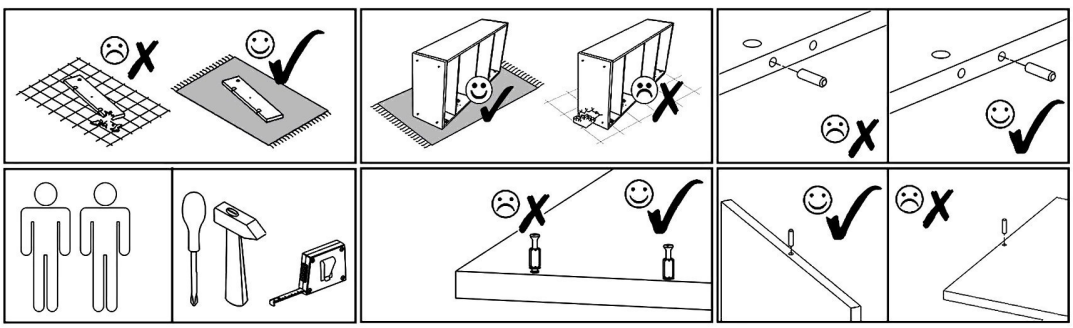

V13 x1	E3 8x50mm x4	N4 L=62mm x4	T1 x6	Z1 x50

M1 12x15mm x28	E1 8x30mm x20	N1 L=35mm x20	B1 B ø17/5-4mm x28	B1 S-A ø17/5-4mm x28	B1 Ant ø17/5-4mm x28	B1 K ø17/5-4mm x28	V15 x10

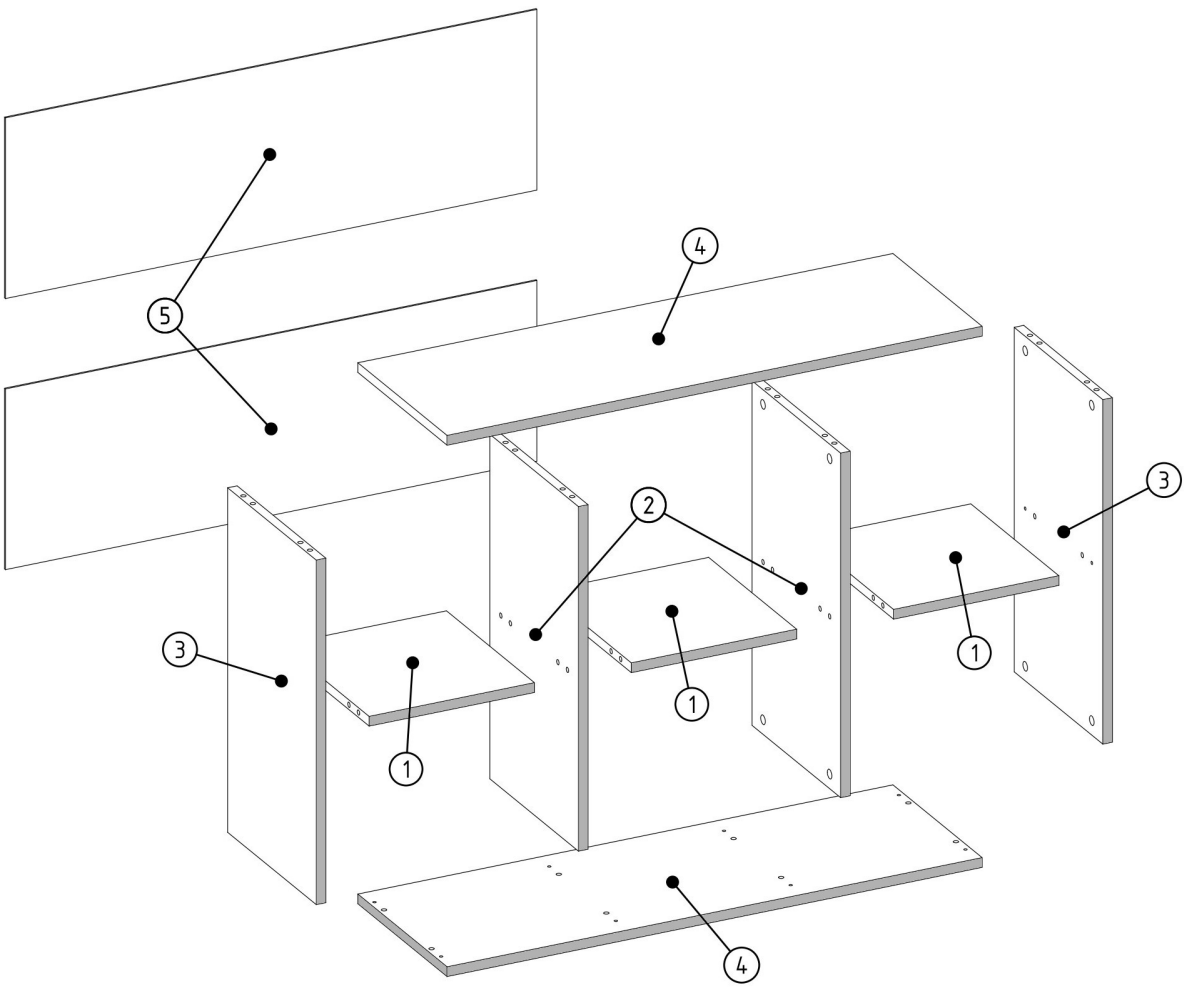

001602	5	2
001603	4	2
001605	3	2
001601	2	2
001604	1	3
ID	NUMBER	QUANTITY

M1	E1
	
12x15mm x12	8x30mm x4

x2

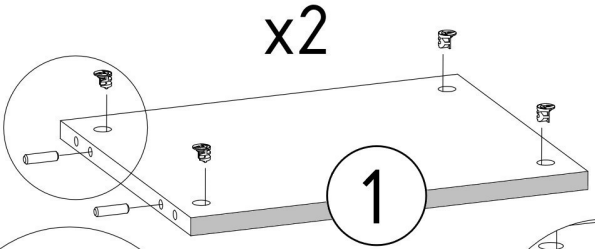

x1

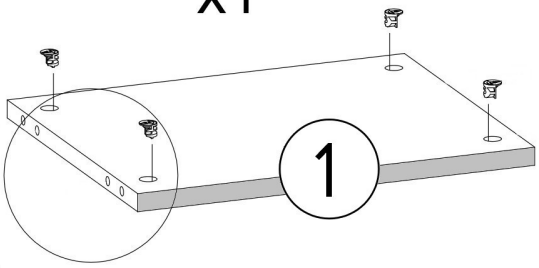

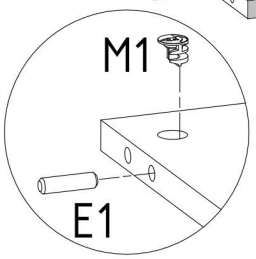

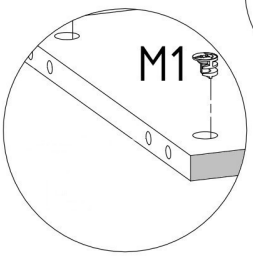

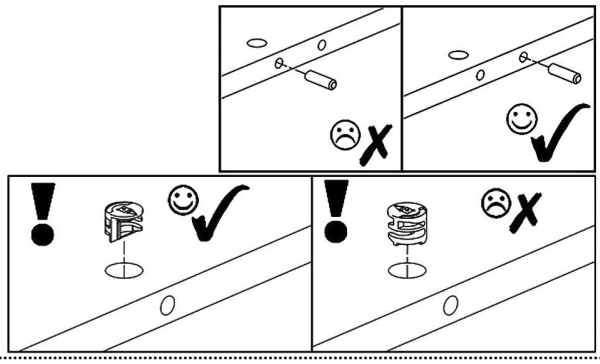

M1	E1
	
12x15mm x8	8x30mm x8

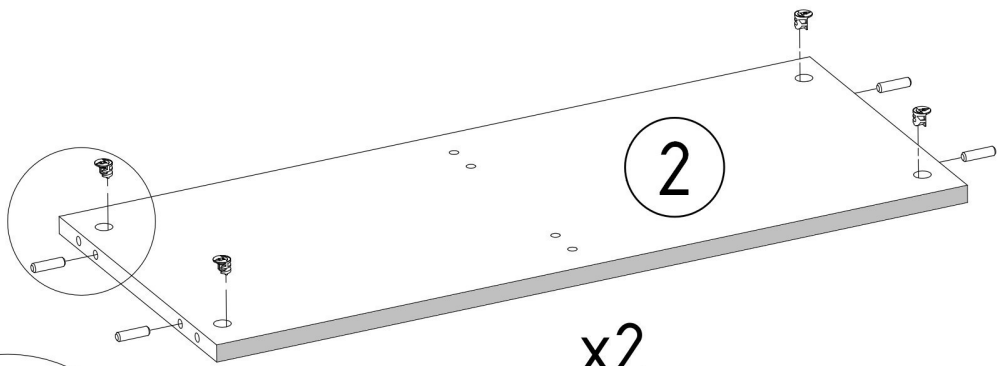

x2

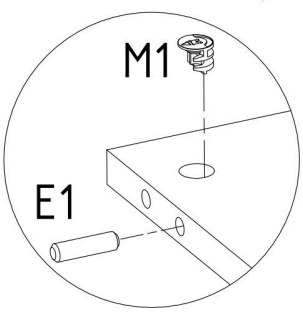

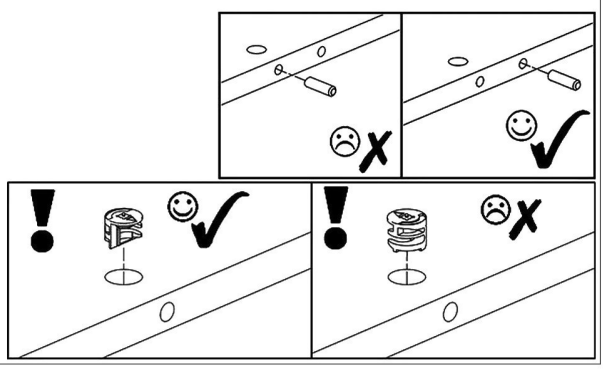

M1	E1	N1
		
12x15mm x8	8x30mm x8	L=35mm x4

x2

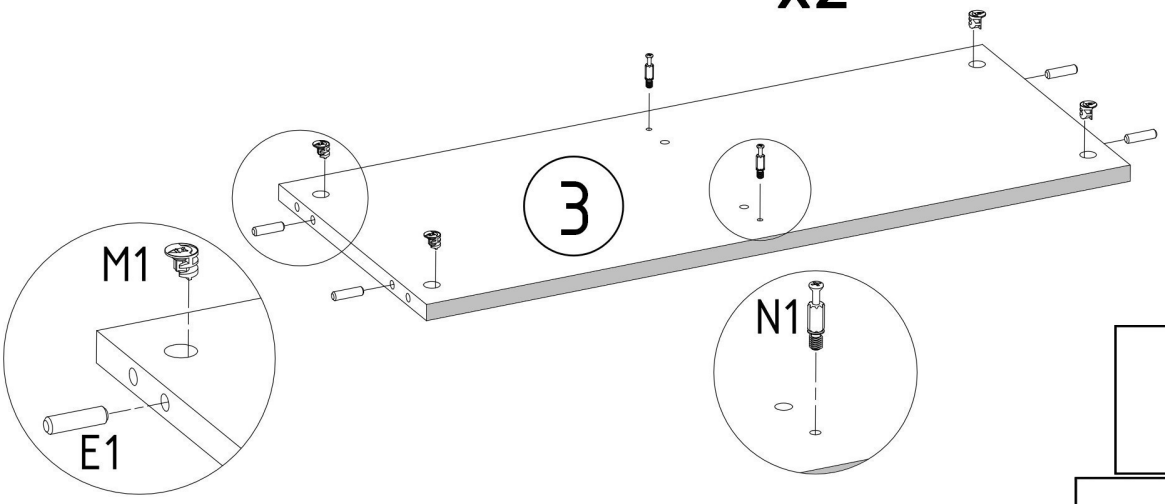

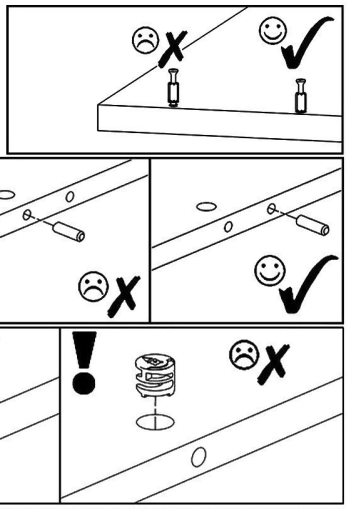

E3	N4
	
8x50mm x4	L=62mm x4

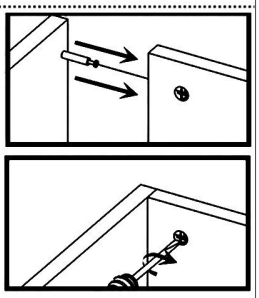

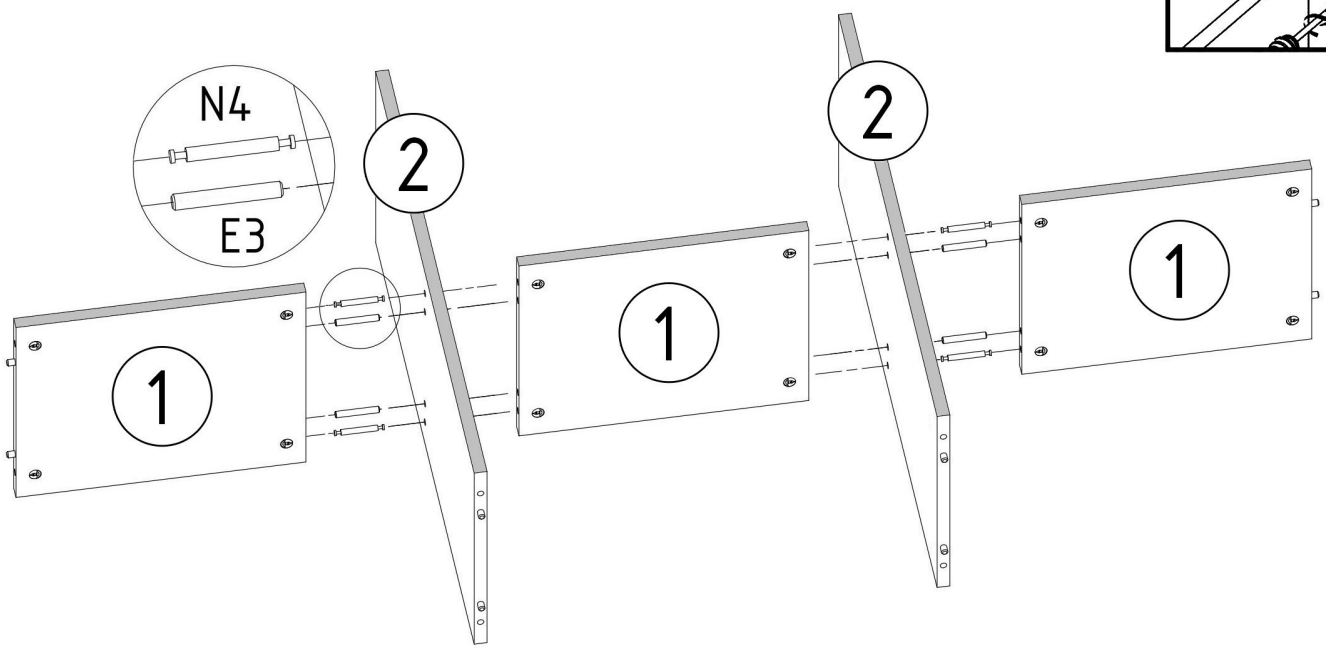

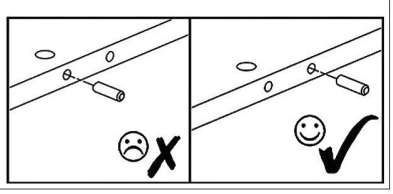

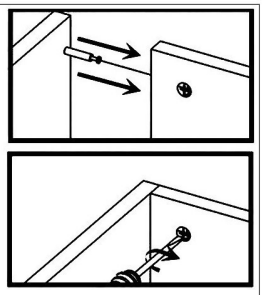

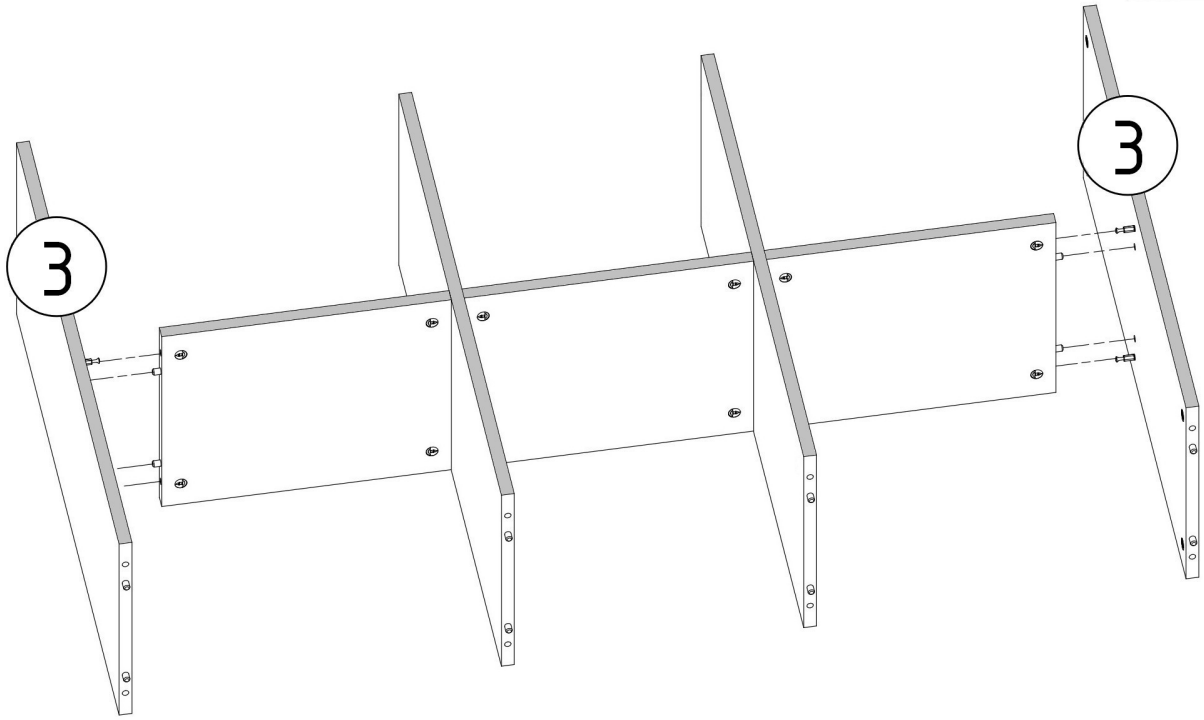

N1



L=35mm x16

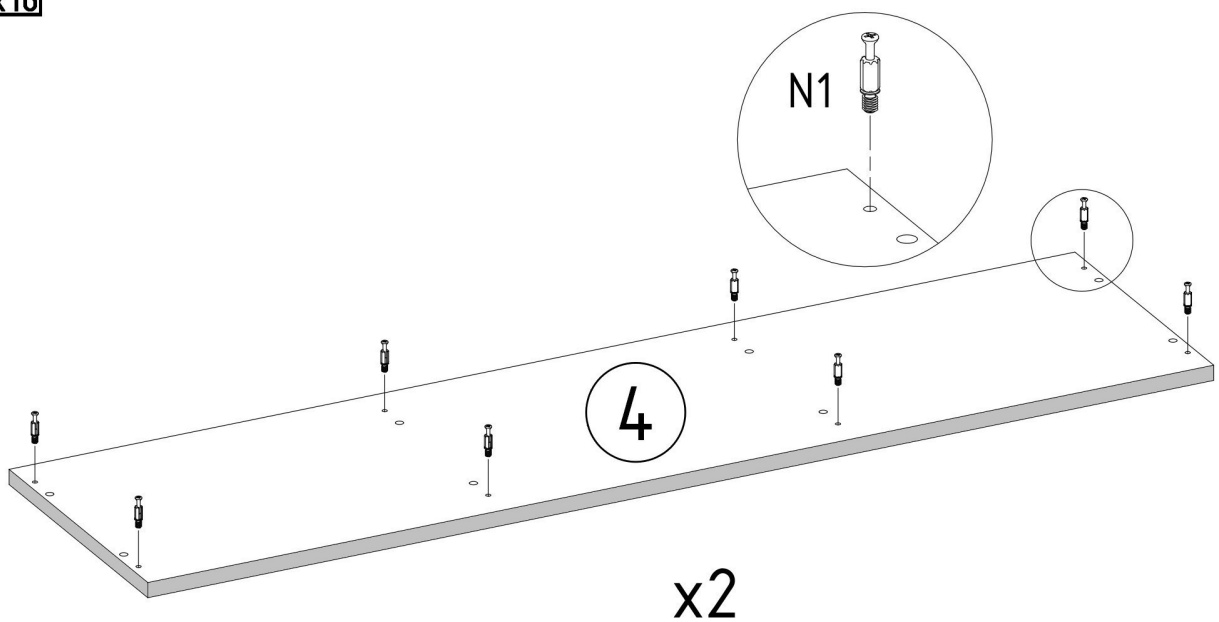

x2

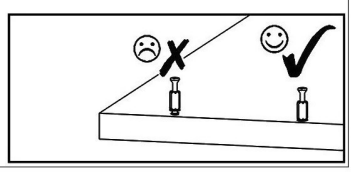

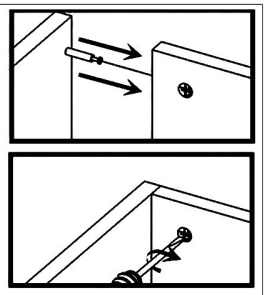

4
4

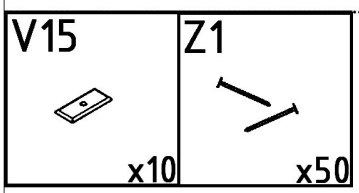
V15
x10
Z1
x50



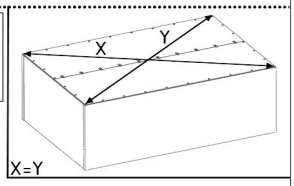
X
Y
X=Y

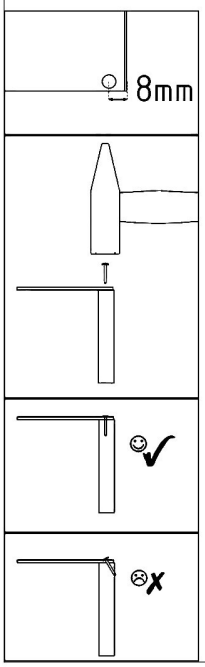
8mm

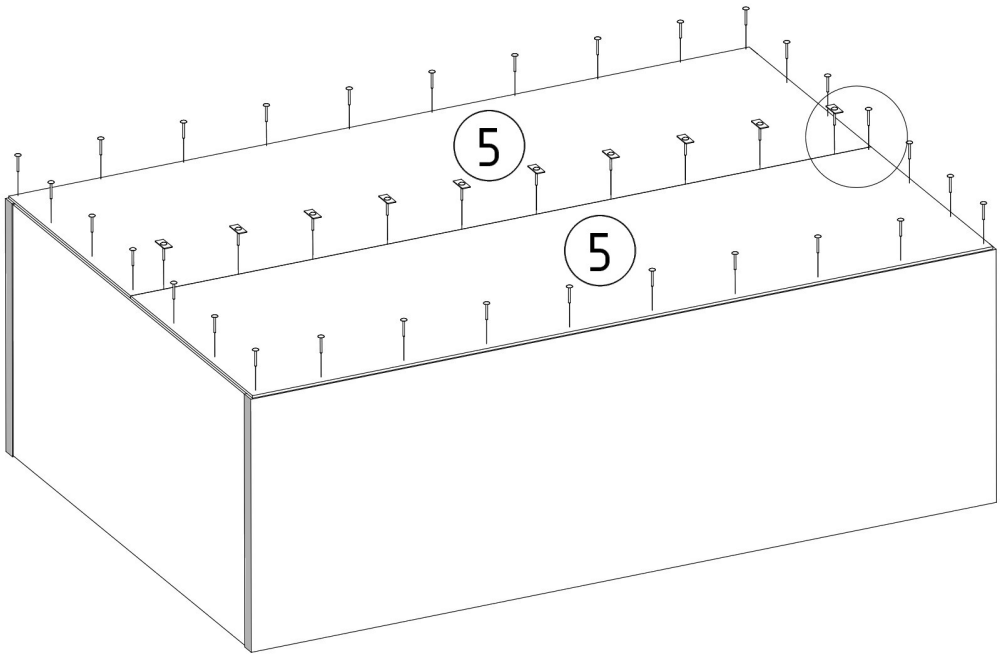
5
5

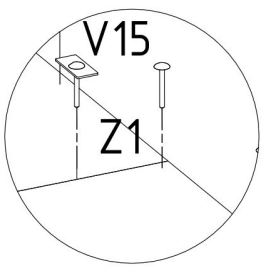
V15
Z1

T1

x6

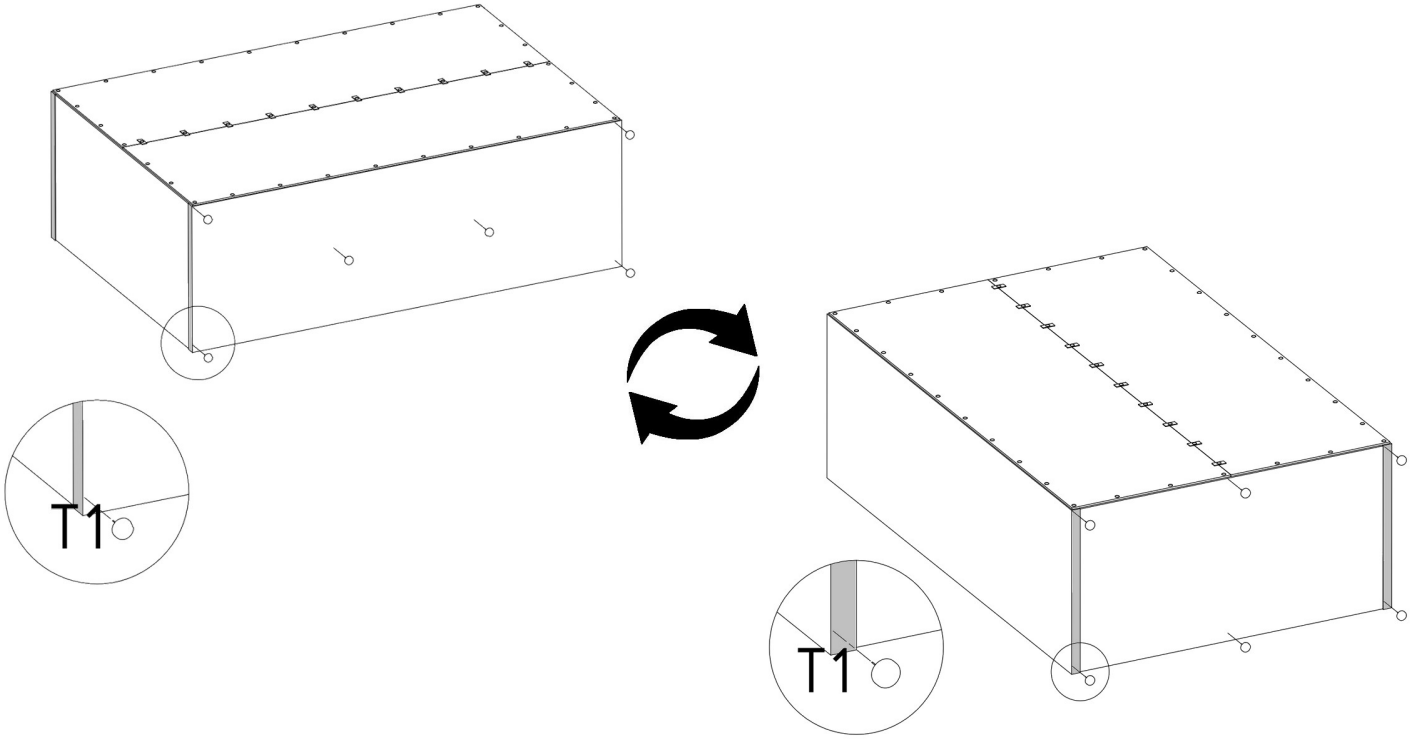

B1

ø17/5-4mm x28

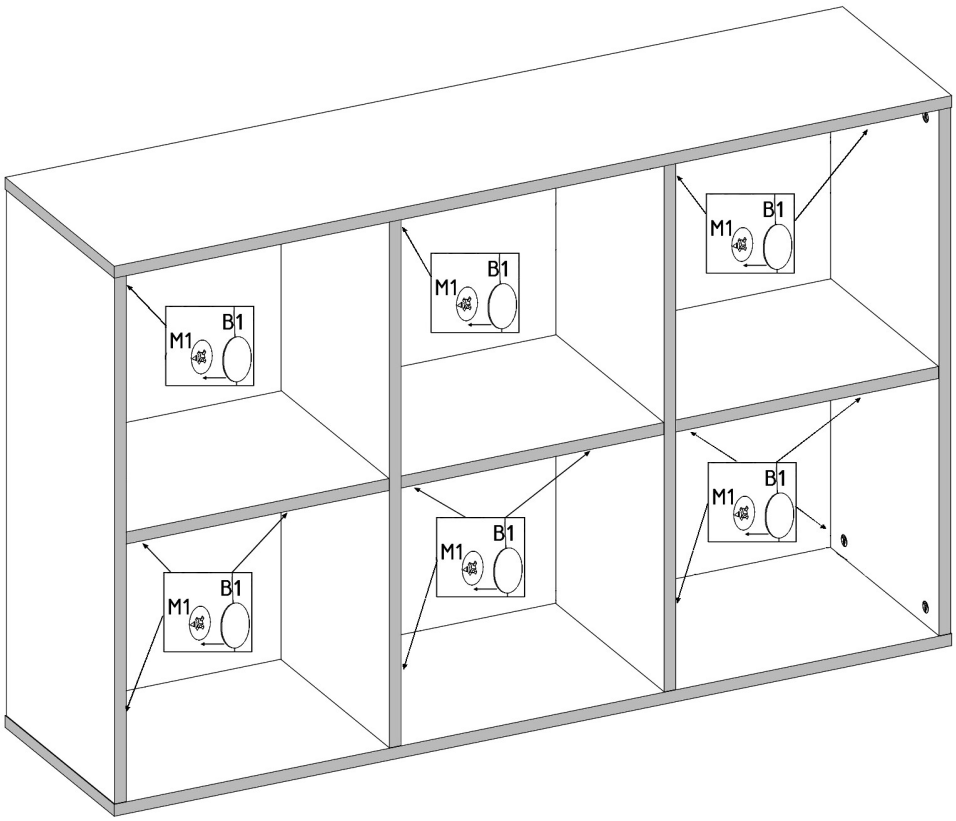

V13

x1

