INSTRUKCJA MONTAŻU

Szafka RTV 150 cm z 2 szafkami i półką na nóżkach

Kolor: Dąb Bookmatch

Kod produktu: OR10545

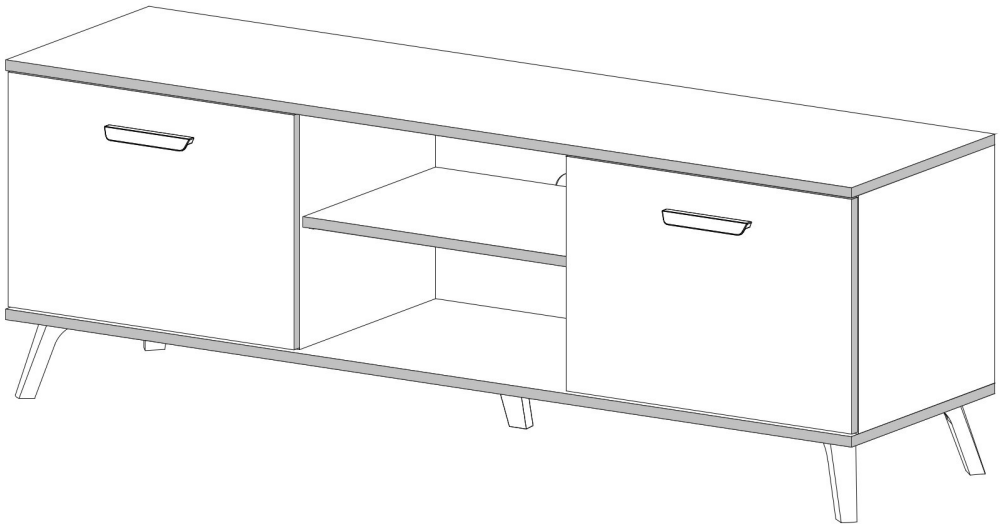

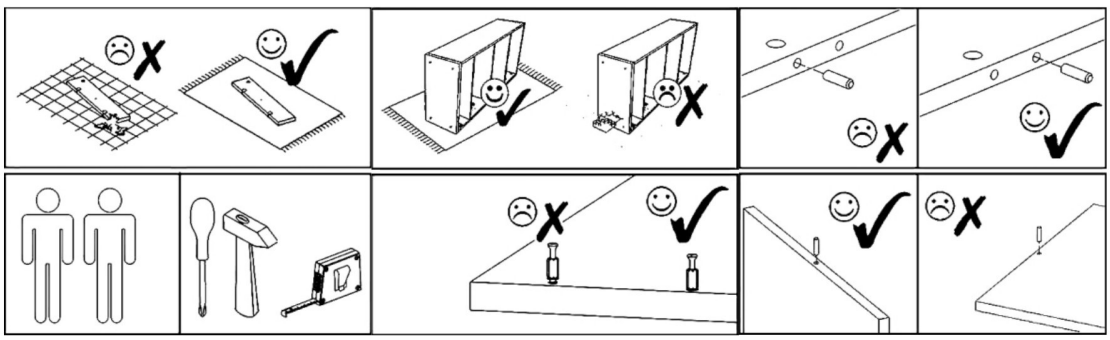

A1  ZP x4	E1  8x30mm x16	M1  12x15mm x16	N1  L=35mm x16	S1  3,5x16mm x23	V16  5x16mm x4	Z1  x60	S7  4x25mm x4
V13  x1	T8  H=120mm x5	U19  L=152/128mm x2					

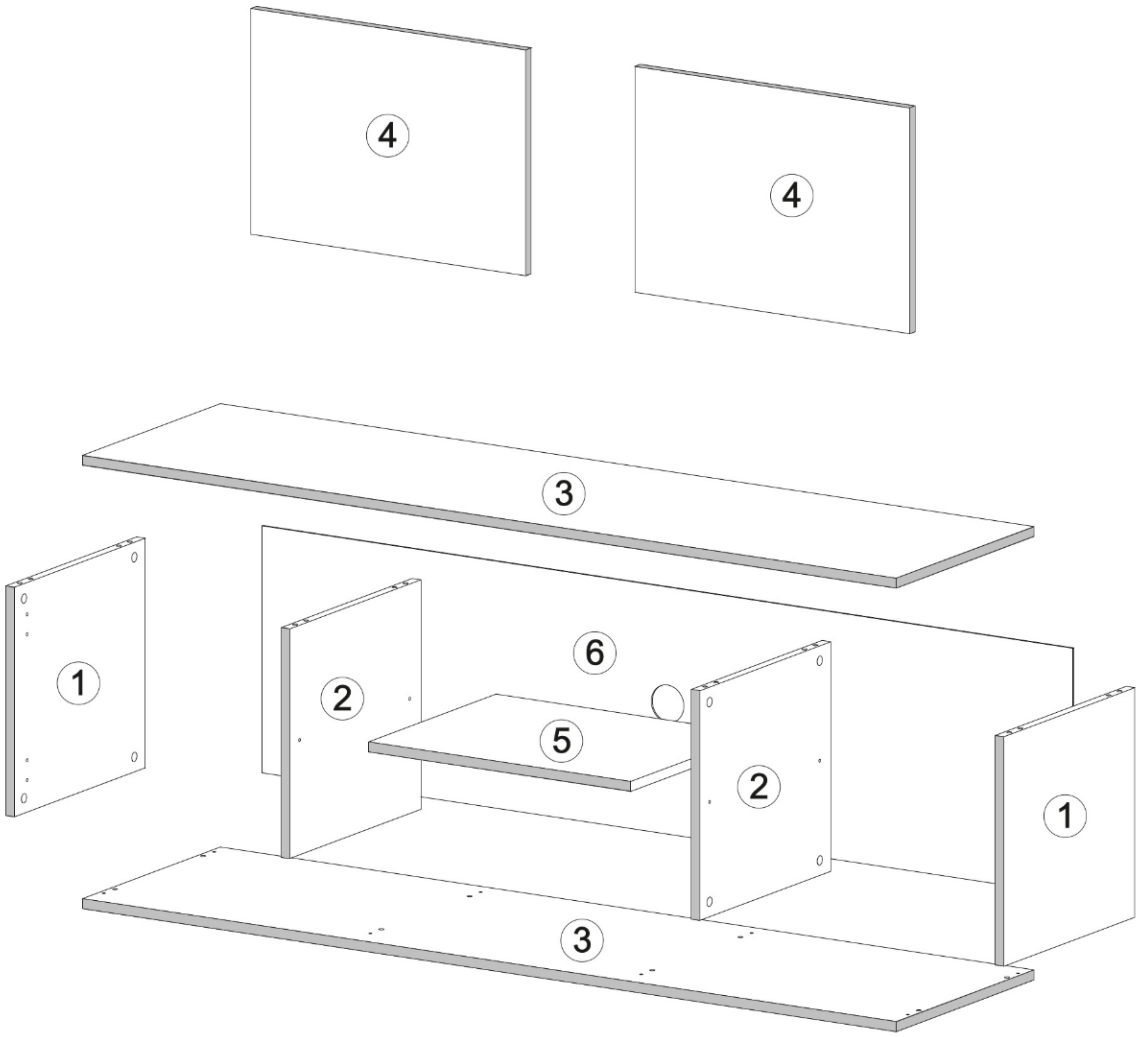

NUMBER	QUANTITY
1	2
2	2
3	2
4	2
5	1
6	1

E1 8x30mm x8

M1 12x15mm x8

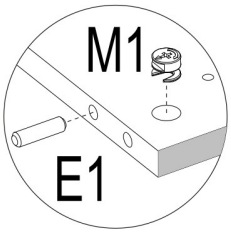

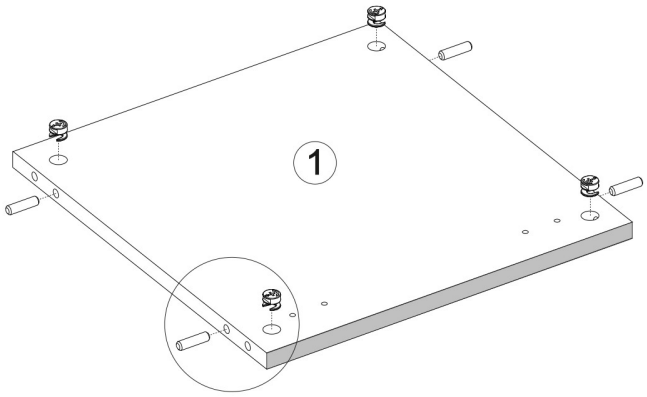

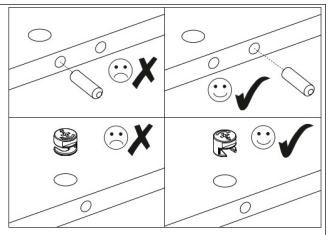

x2

E1 8x30mm x8

V16 5x16mm x4

M1 12x15mm x8

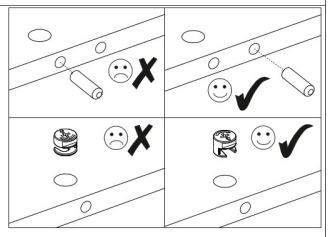

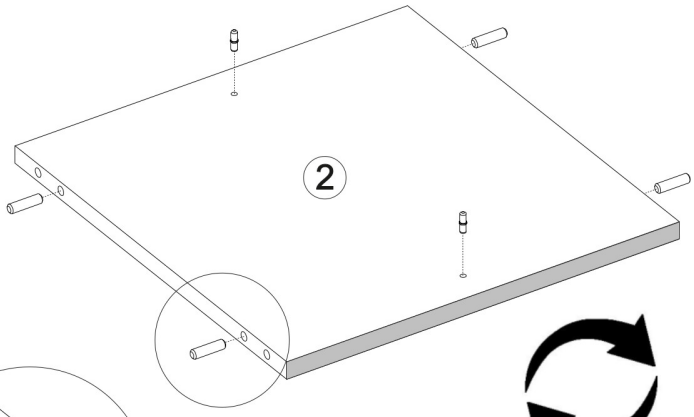

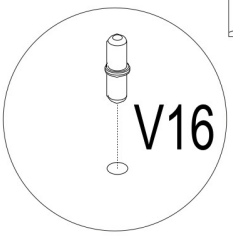

x2

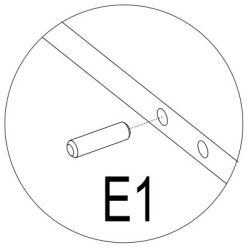

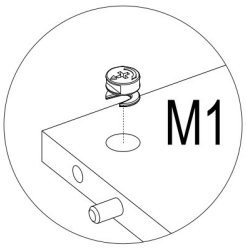

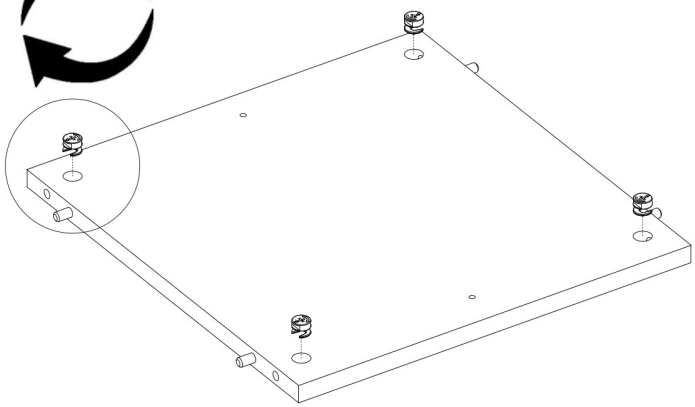

N1 L=35mm x16

x2

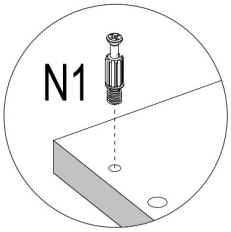

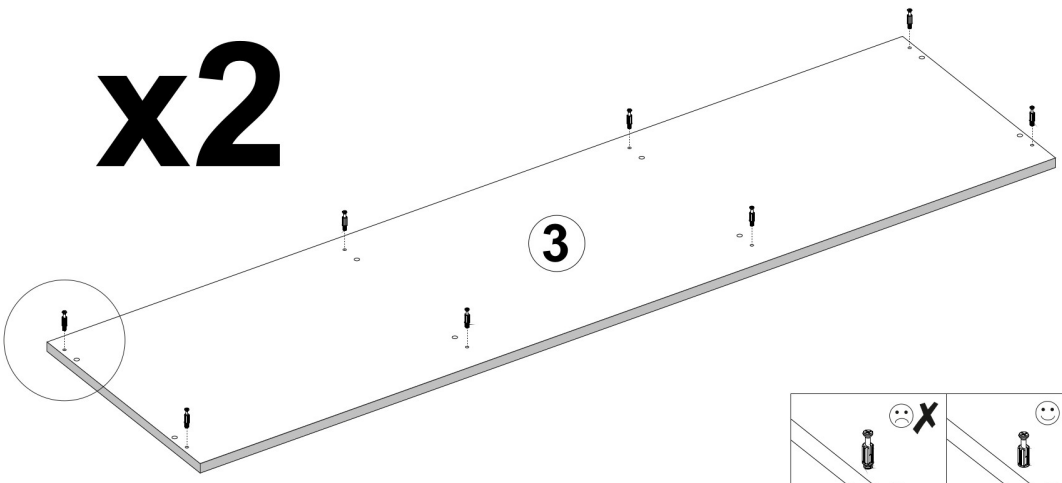

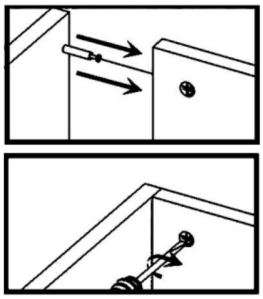

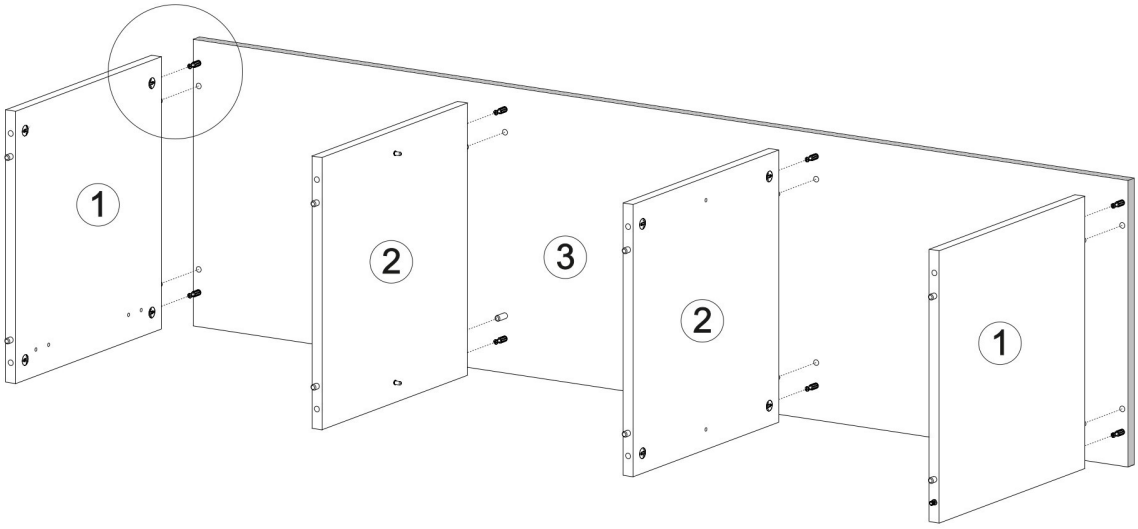
1
2
3
2
1

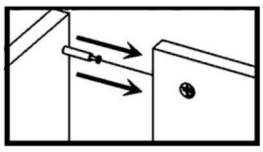

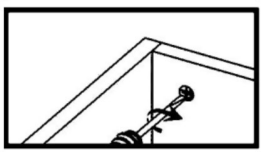

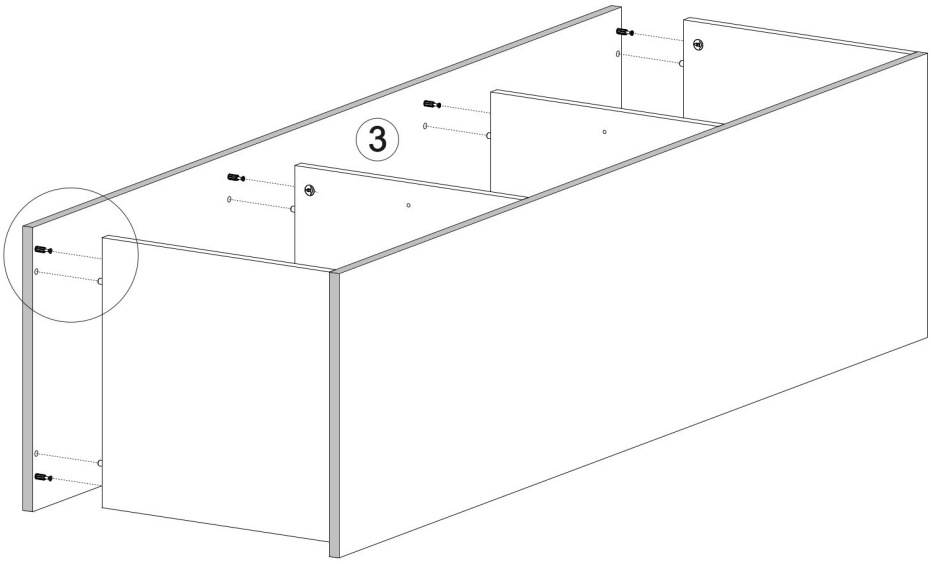
3

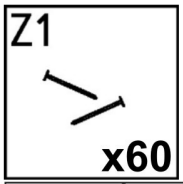
Z1
x60

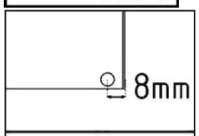
8mm

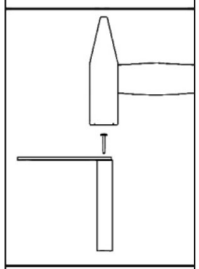

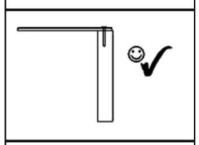

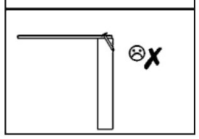

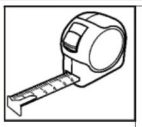

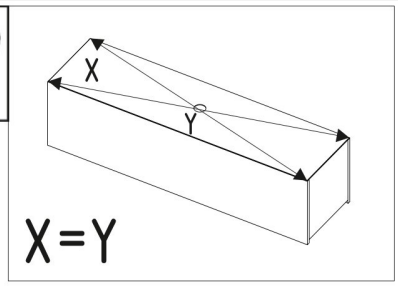
X
Y
X=Y

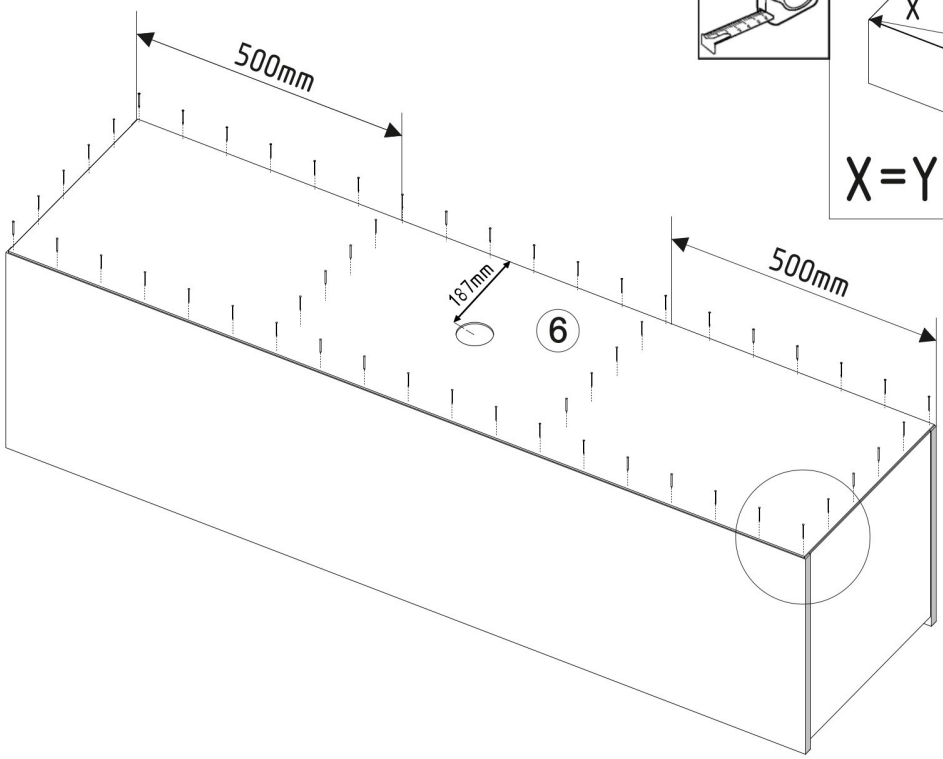
500mm
187mm
6
500mm

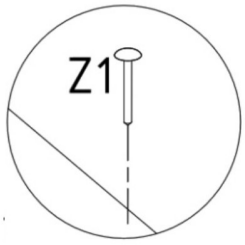
Z1

S1
3,5x16mm x15

T8
H=120mm x5

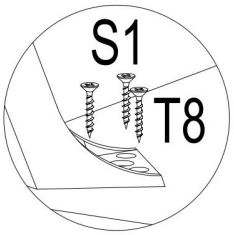

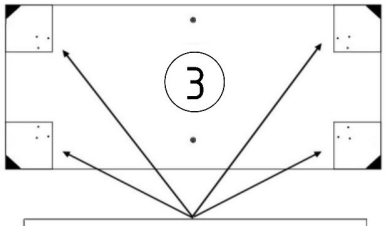

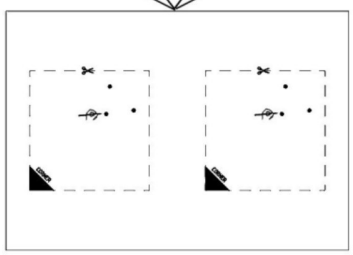

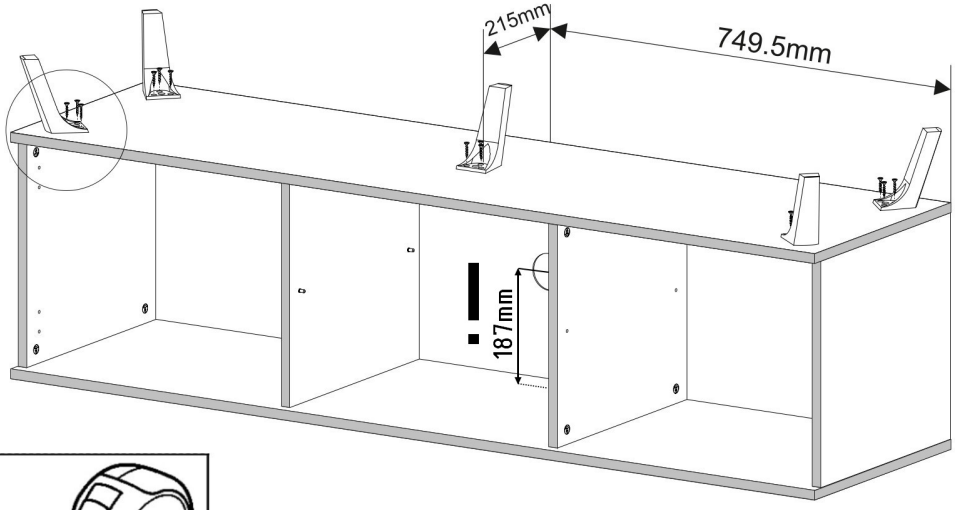

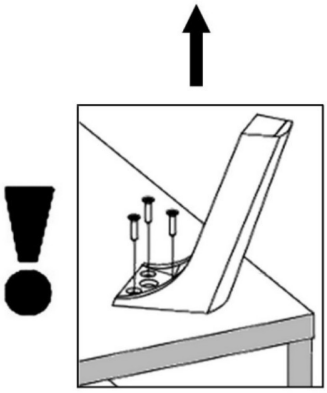

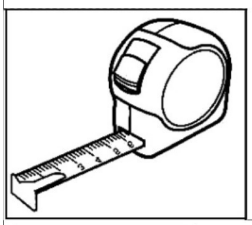

A1
ZP x4

S1
3,5x16mm x8

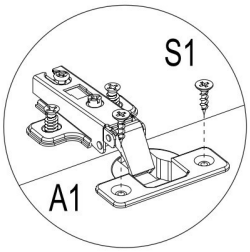

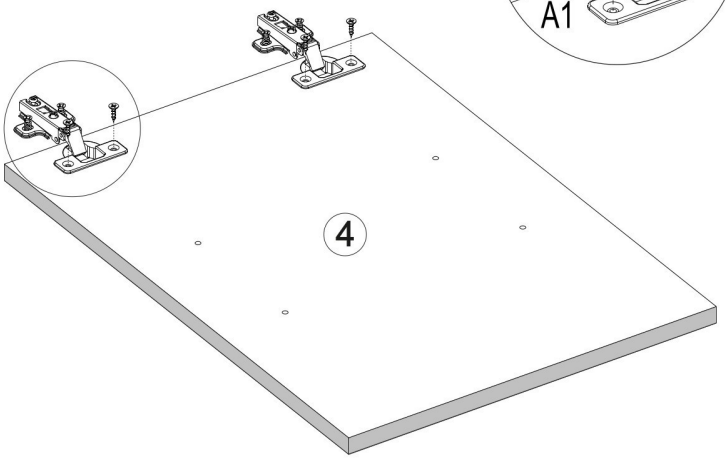

x2

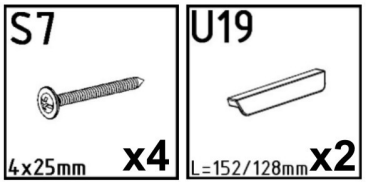
S7
4x25mm
x4
U19
L=152/128mm
x2

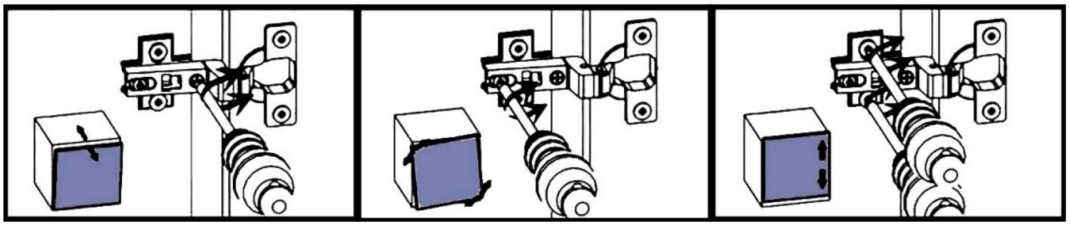

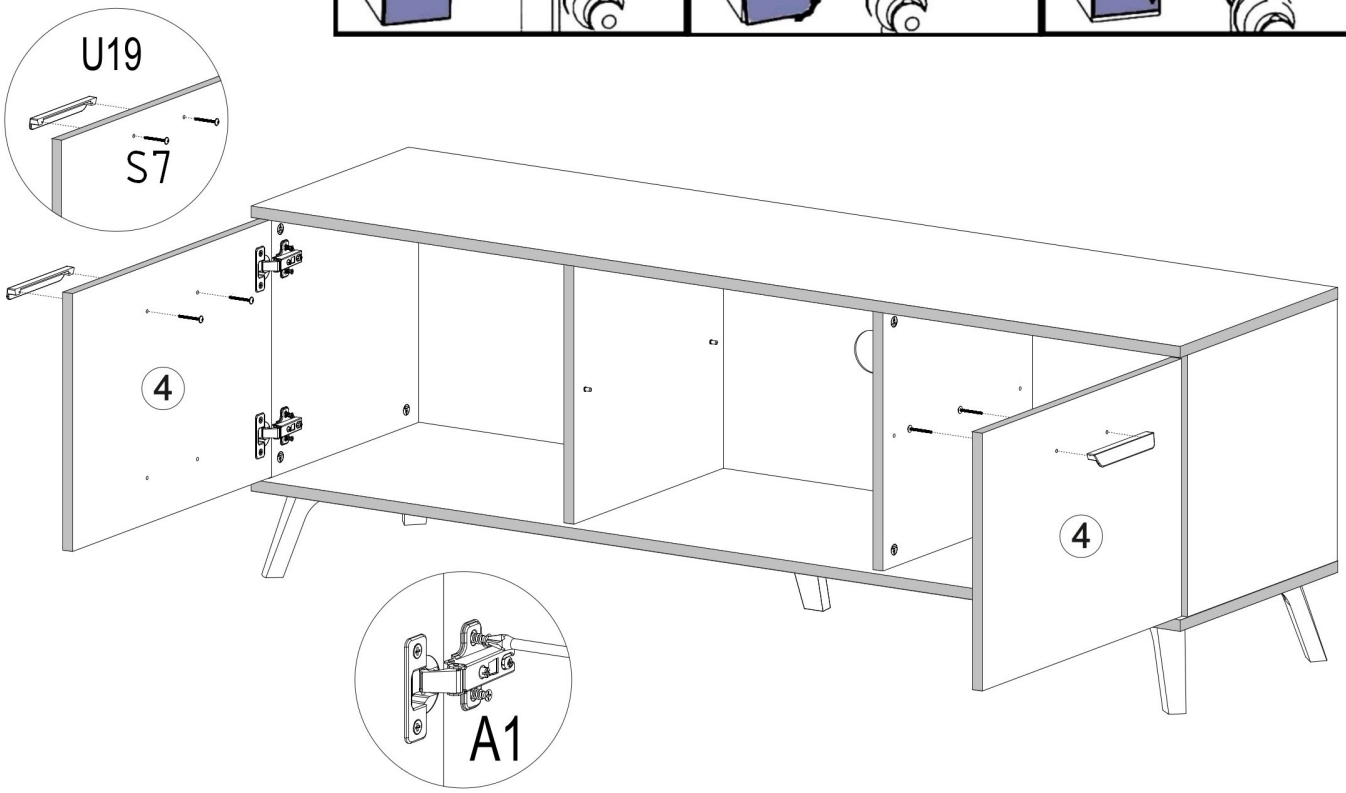
U19
S7
4
4
A1


V13
x1

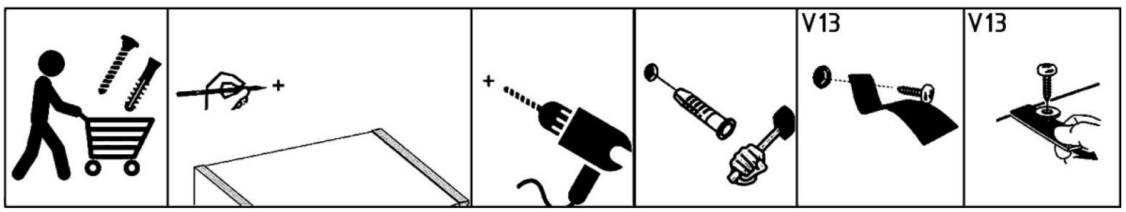
V13
V13

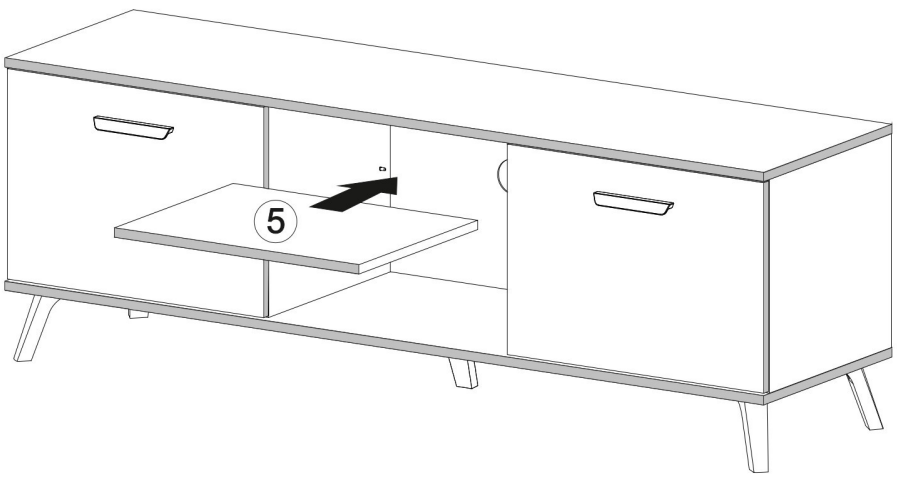
5

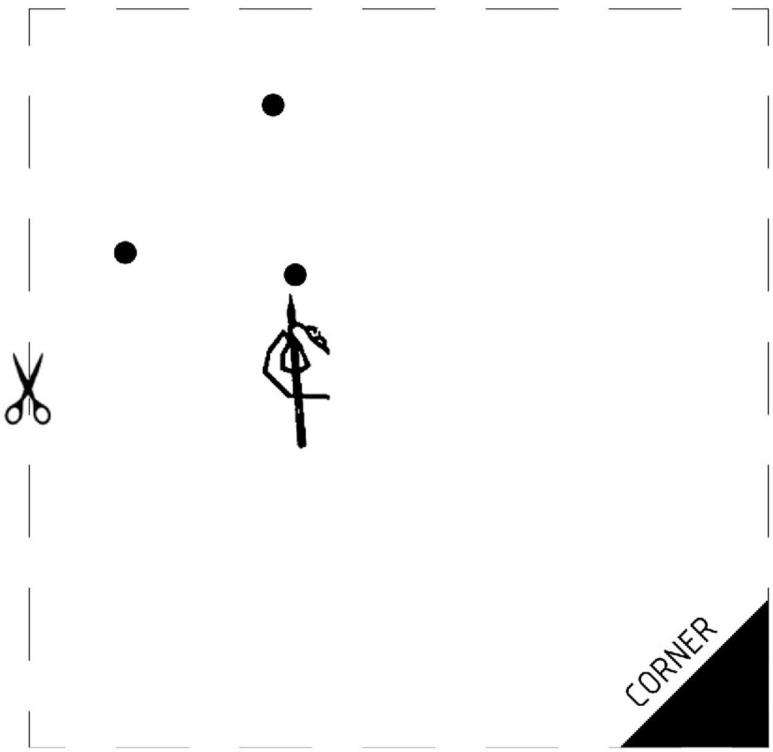
CORNER

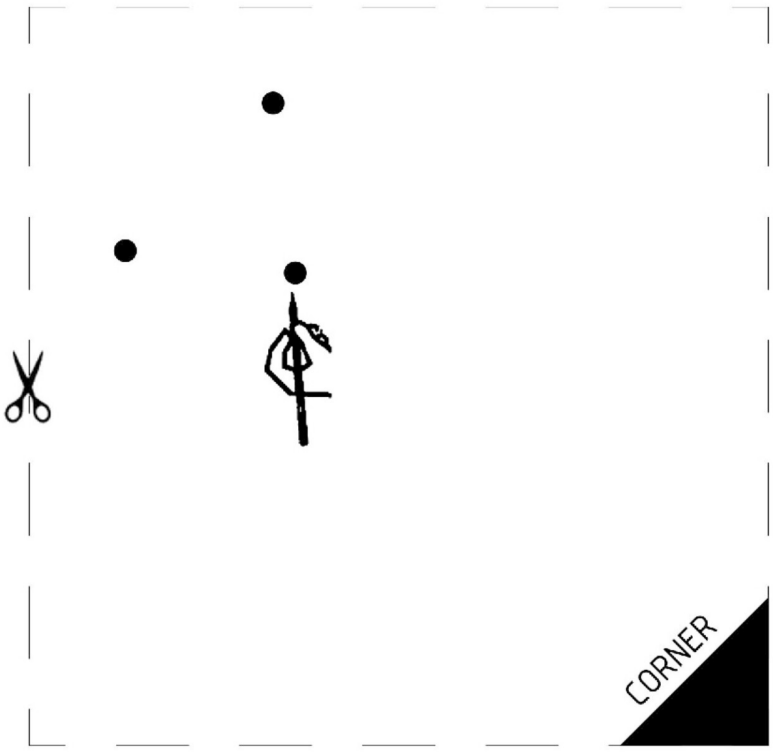
CORNER