INSTRUKCJA MONTAŻU

Regał na książki 80 cm, 182 cm

Kolor: Dąb Artisan

Kod produktu: OR10436

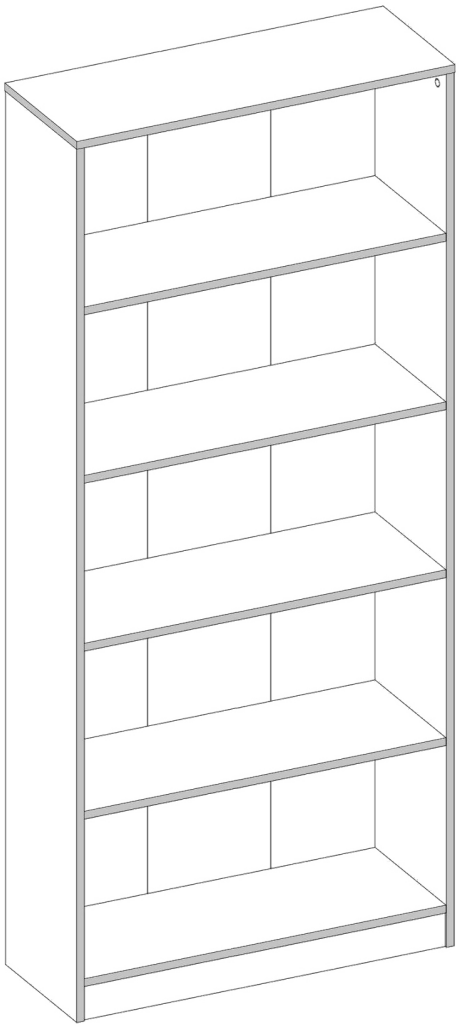

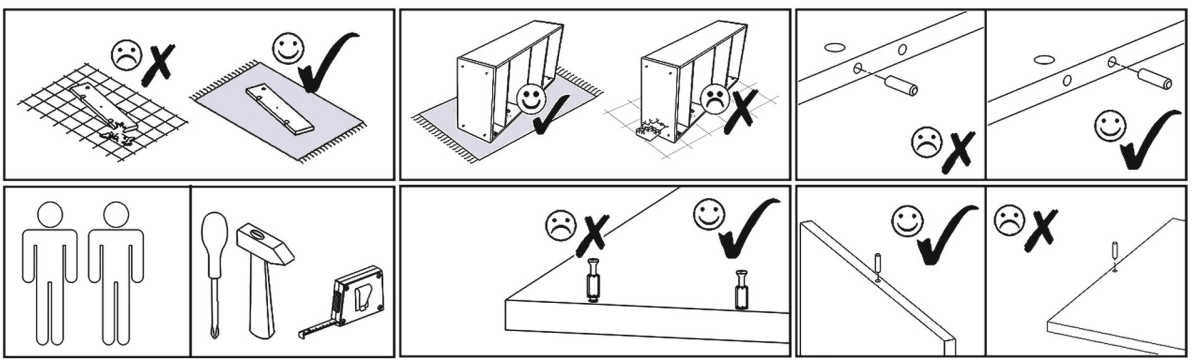

B1 B ø17/4mm x4	B1 S/A ø17/4mm x4	B1 CZ ø17/4mm x4	B1 Ant ø17/4mm x4	B1 K ø17/4mm x4		
M1 12x15mm x12	N1 L=35mm x12	E1 8x30mm x16	Z1 x50	V16 5x16mm x12	T1 x4	V13 x1

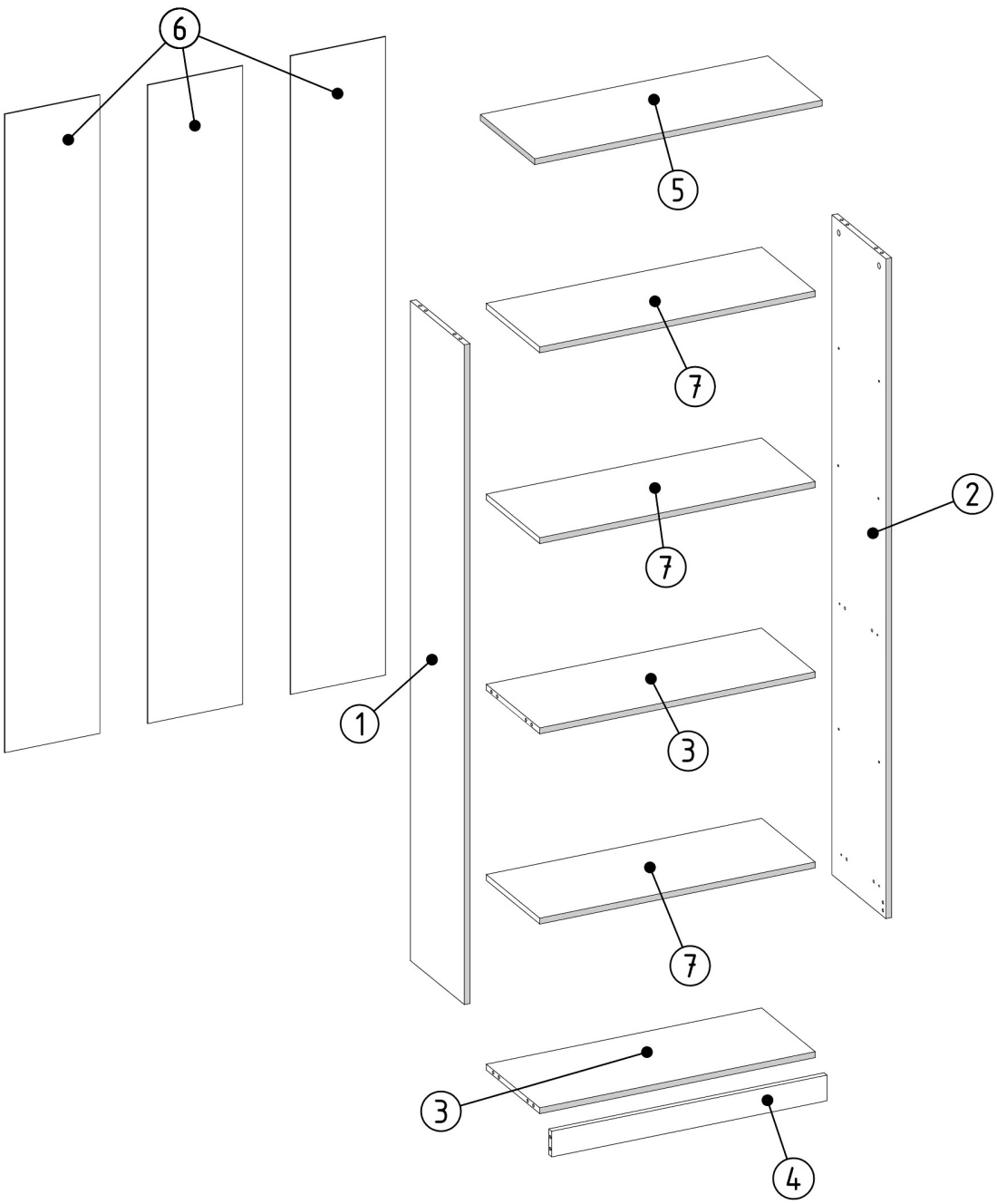

ID	NUMBER	QUANTITY
000512	1	1
000513	2	1
001749	3	2
001750	4	1
001748	5	1
000526	6	3
000527	7	3

M1	E1	V16	N1	T1
12x15mm x4	8x30mm x4	5x16mm x12	L=35mm x8	x4

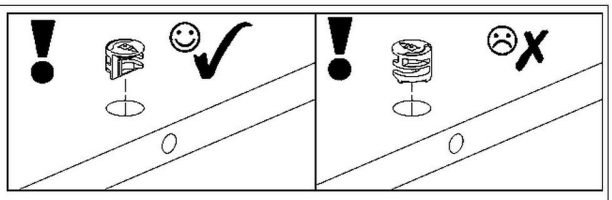

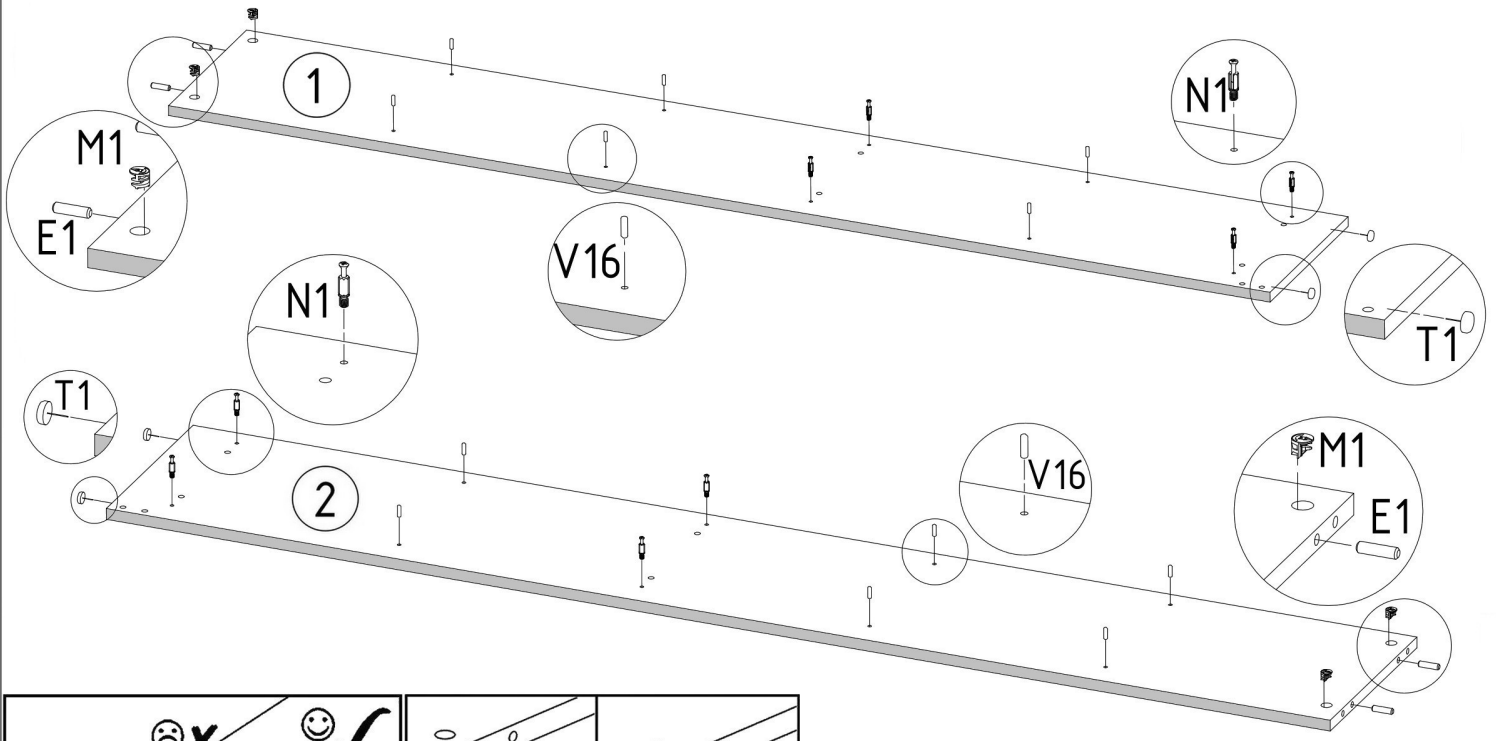

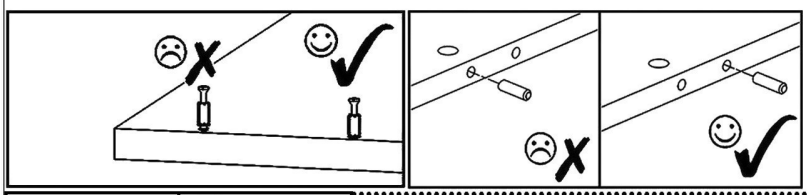

M1	E1
12x15mm x8	8x30mm x8

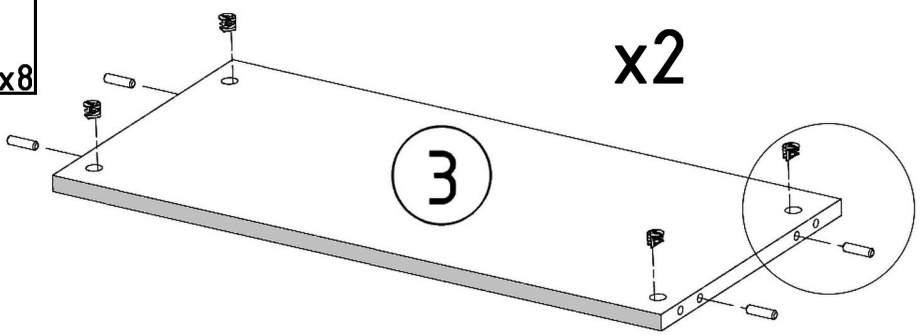

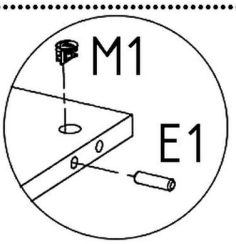

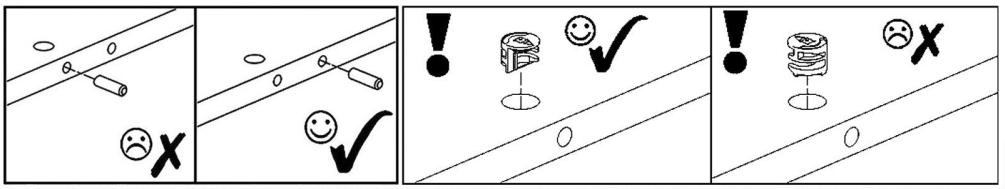

E1
8x30mm x4

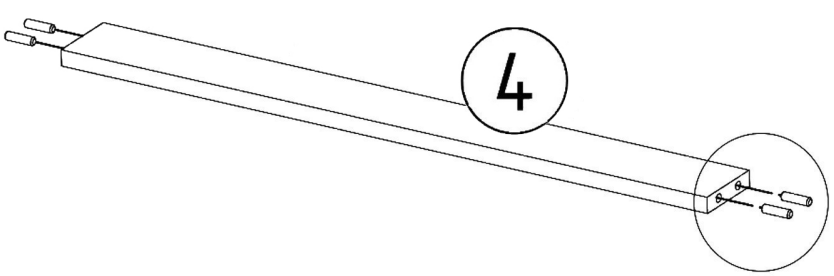

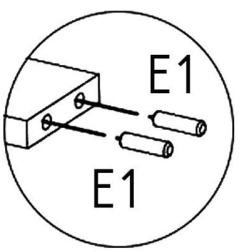

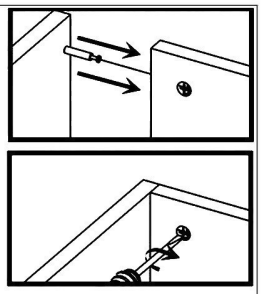

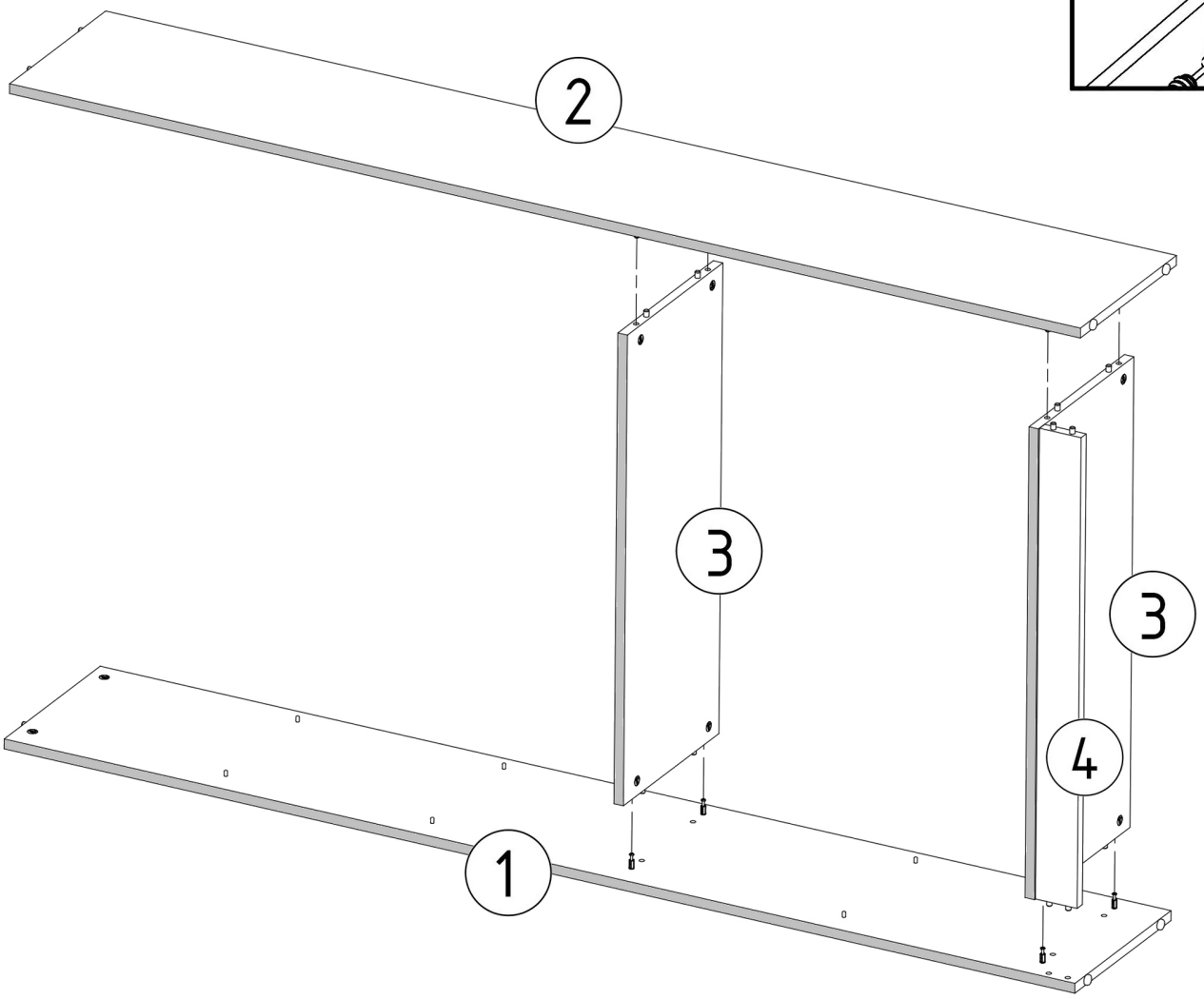
2
3
3
4
1

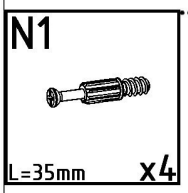
N1
L=35mm
x4

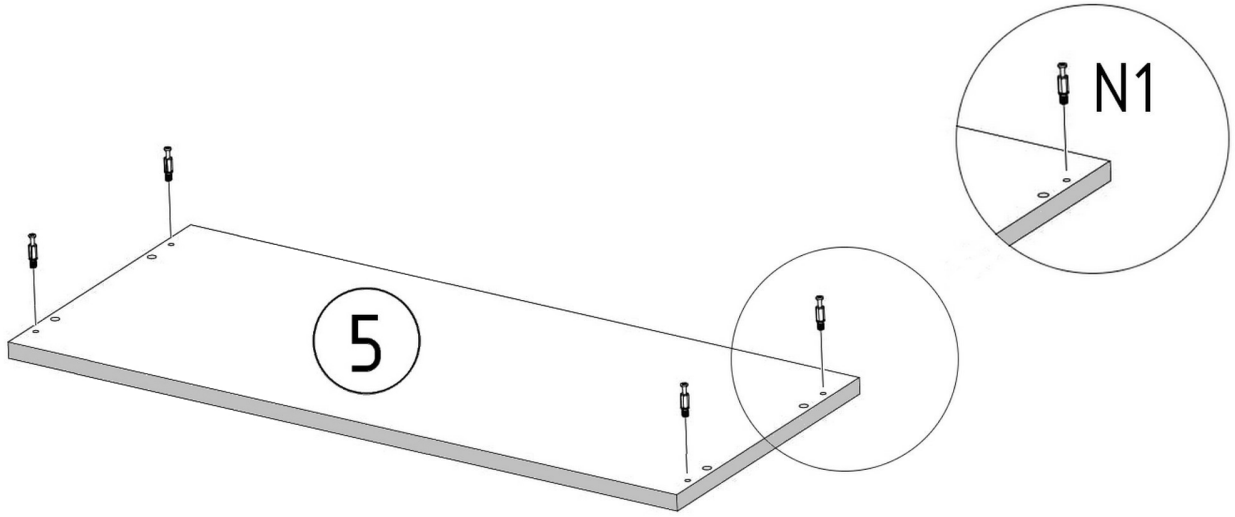
N1
5

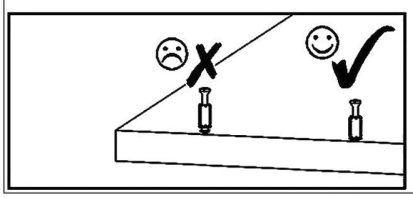

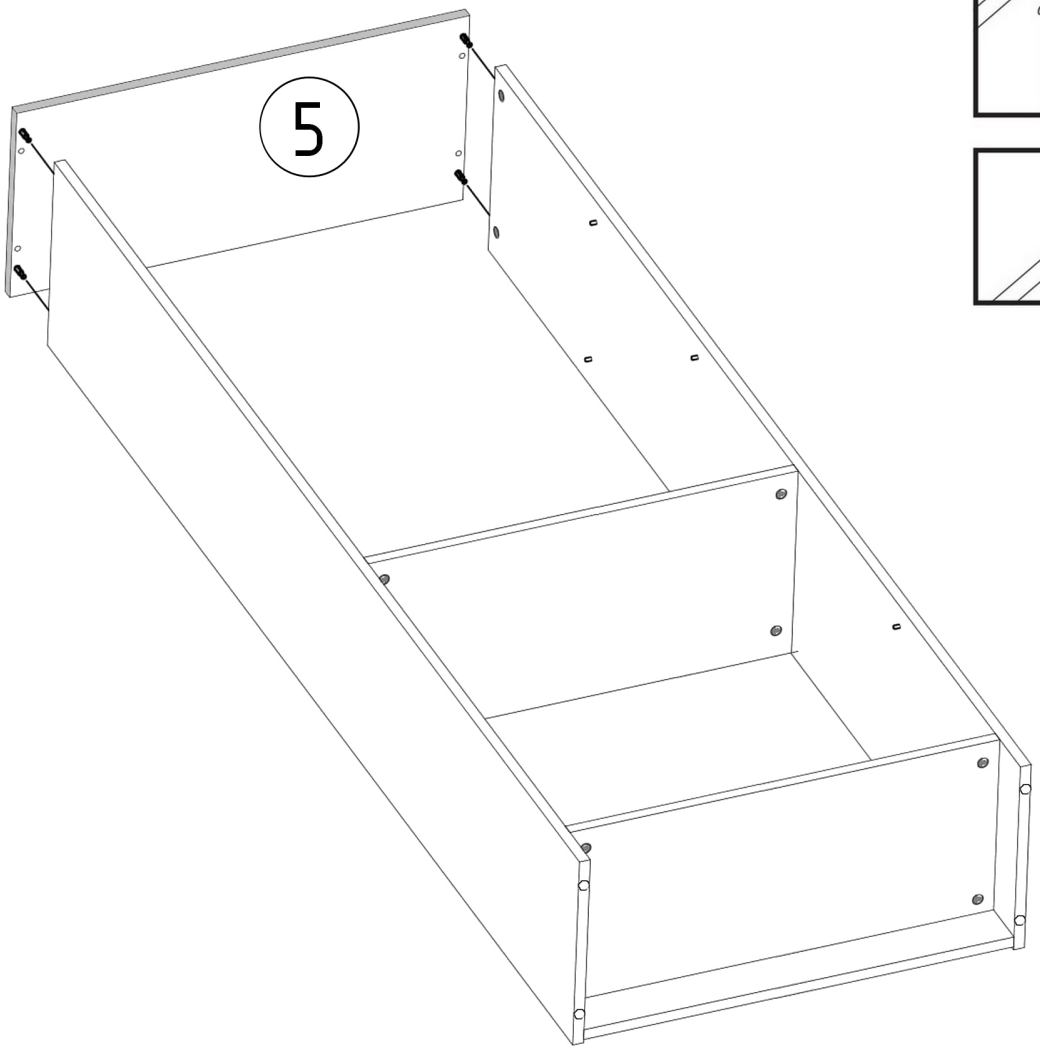
5

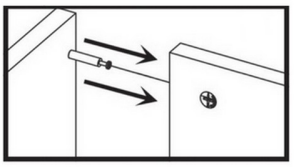

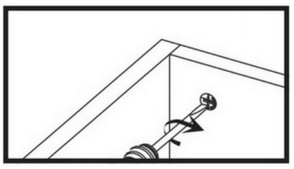

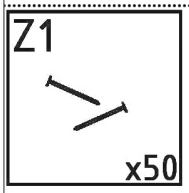
Z1
x50

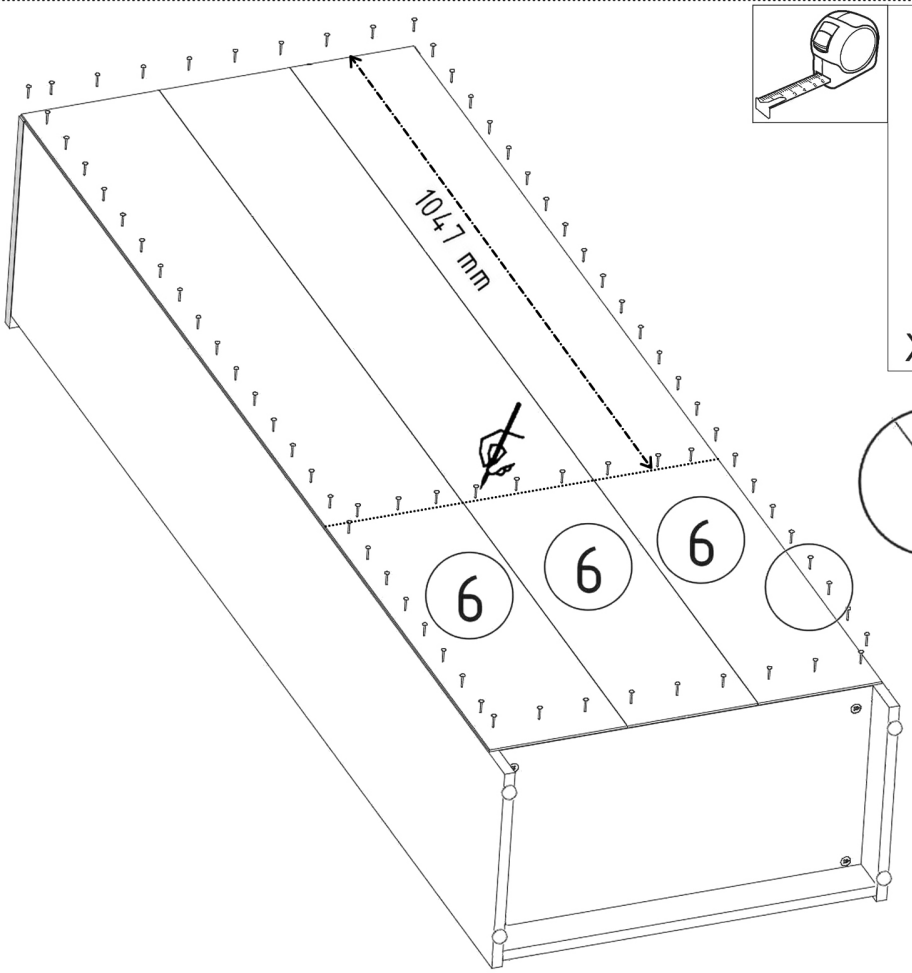
1047 mm
6
6
6

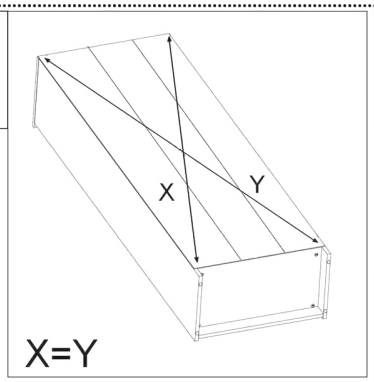
X
Y
X=Y

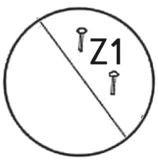
Z1

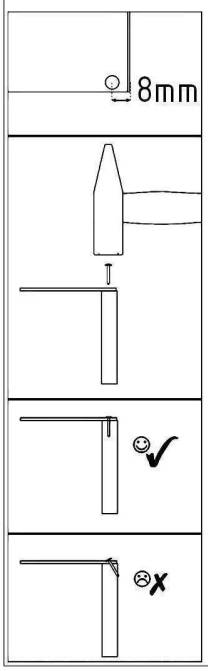
8mm

B1	V13
ø17/4mm x4	x1

