INSTRUKCJA MONTAŻU

Komoda 100 cm z drzwiczkami i 5 szufladami

Kolor: Dąb Artisan

Kod produktu: OR10219

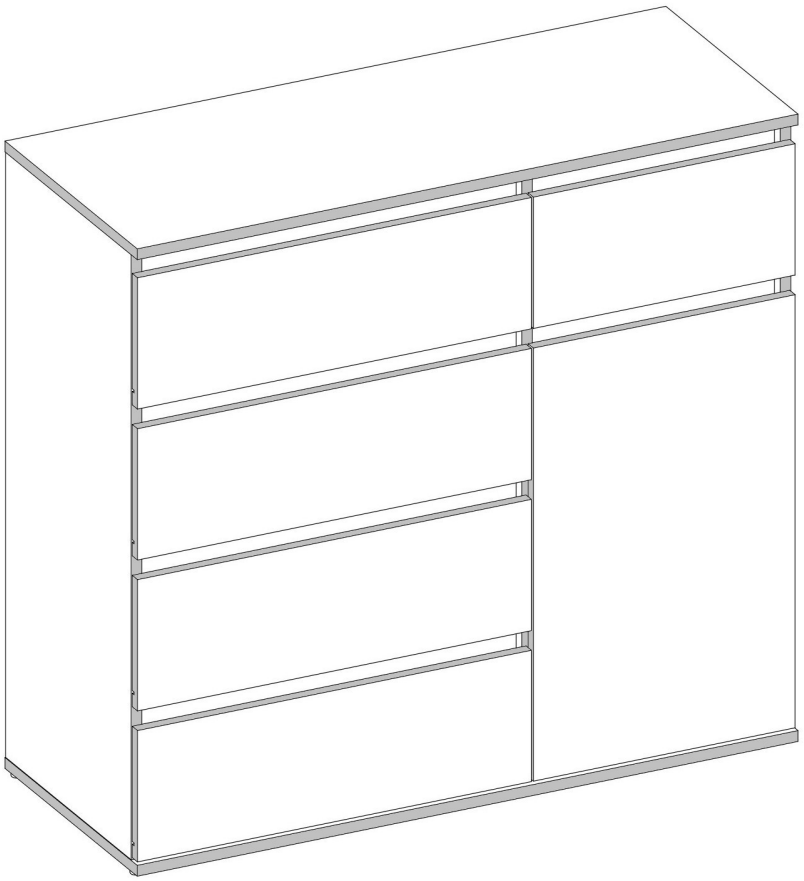

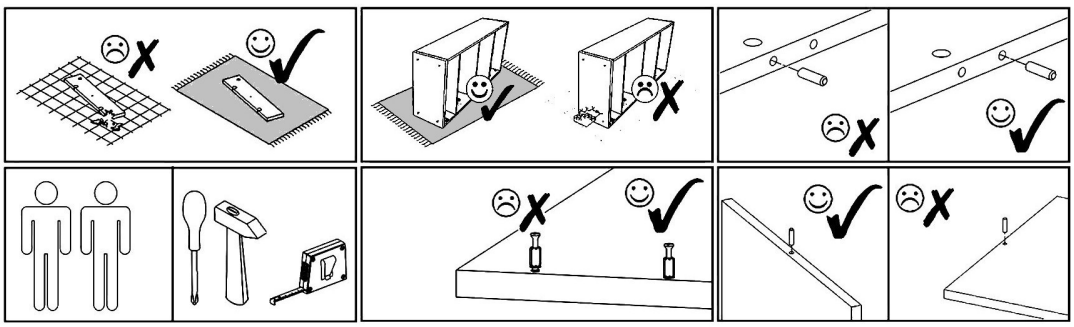

S1 3,5x16mm x24	Z1 x90	F3 Hex 4mm x1	V13 x1	A1 ZP x2	R1 6x8mm x20	V16 5x16mm x4	B1 B ø17/4mm x10
M1 12x15mm x34	N1 L=35mm x30	E1 8x30mm x20	F1 7x50mm x10	E3 8x50mm x2	N4 L=62mm x2	P3 L=350mm x5	T1 x6

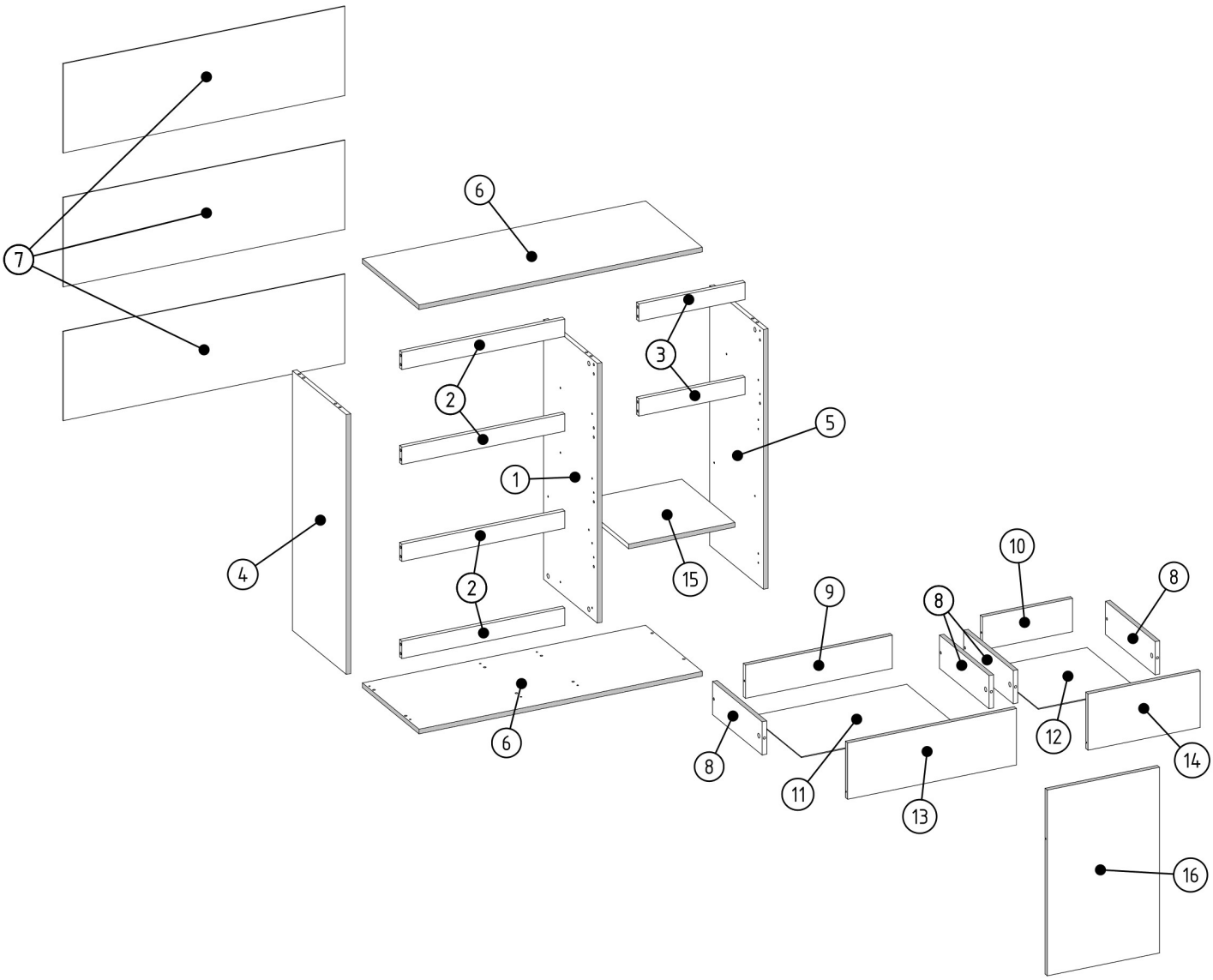

001713	16	1
000070	15	1
001714	14	1
000120	13	4
000052	12	1
000105	11	4
000038	10	1
000102	9	4
000053	8	10
001712	7	3
001716	6	2
001717	5	1
001718	4	1
000069	3	2
000111	2	4
001715	1	1
ID	NUMBER	QUANTITY

M1	N1	E1	P3	R1	V16
12x15mm x4	L=35mm x2	8x30mm x4	L=350mm x5	6x8mm x10	5x16mm x2

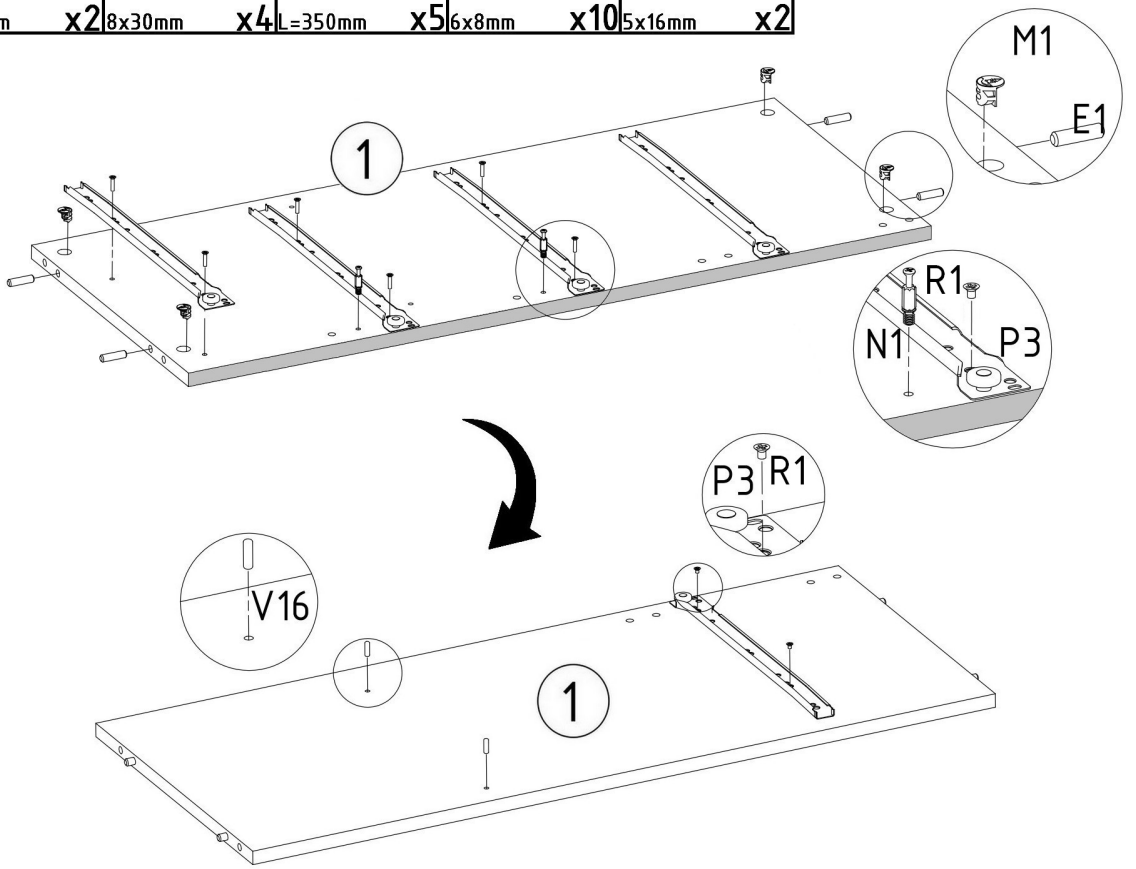

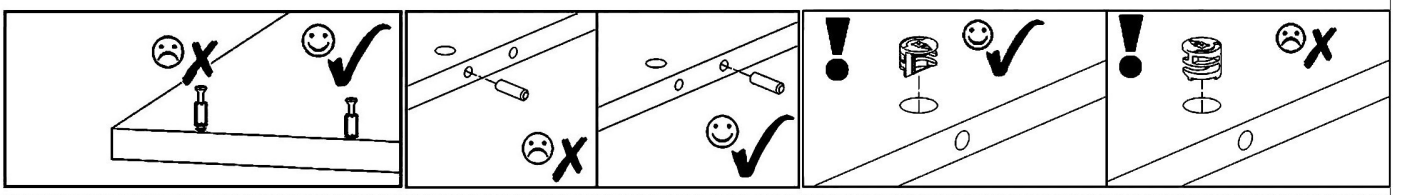

M1	E1
12x15mm x12	8x30mm x8

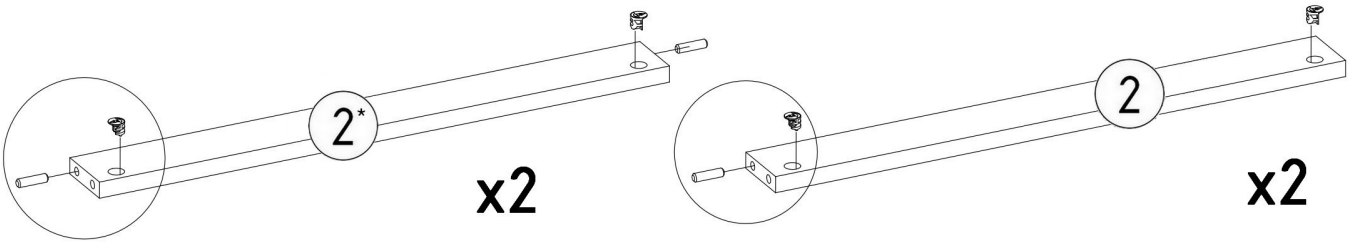

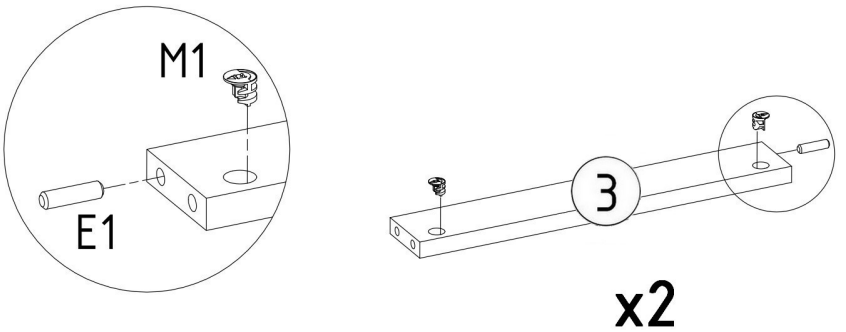

E3	N4
8x50mm x2	L=62mm x2

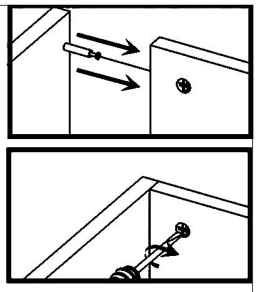

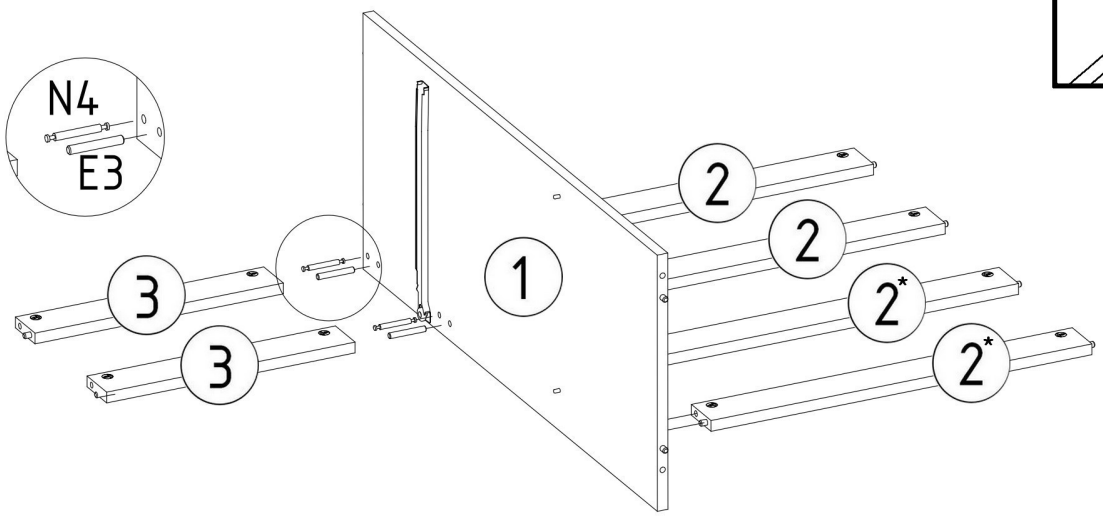

M1	N1	E1	P3	R1	V16
12x15mm x8	L=35mm x6	8x30mm x8	L=350mm x5	6x8mm x10	5x16mm x2

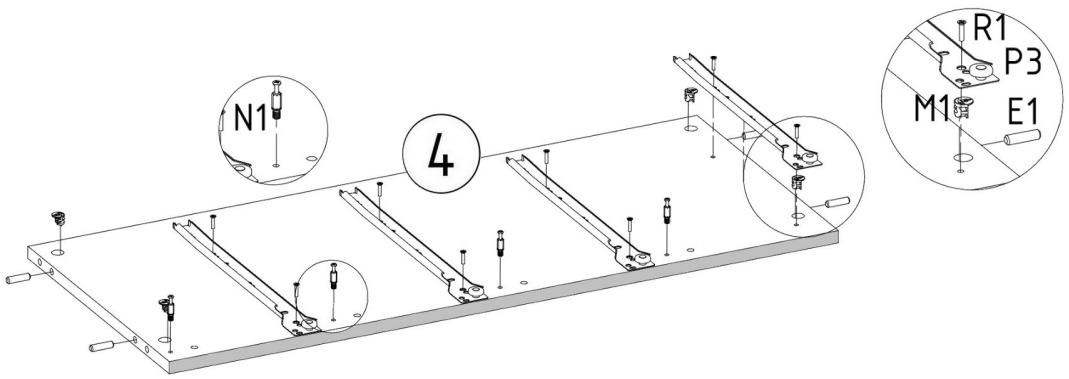

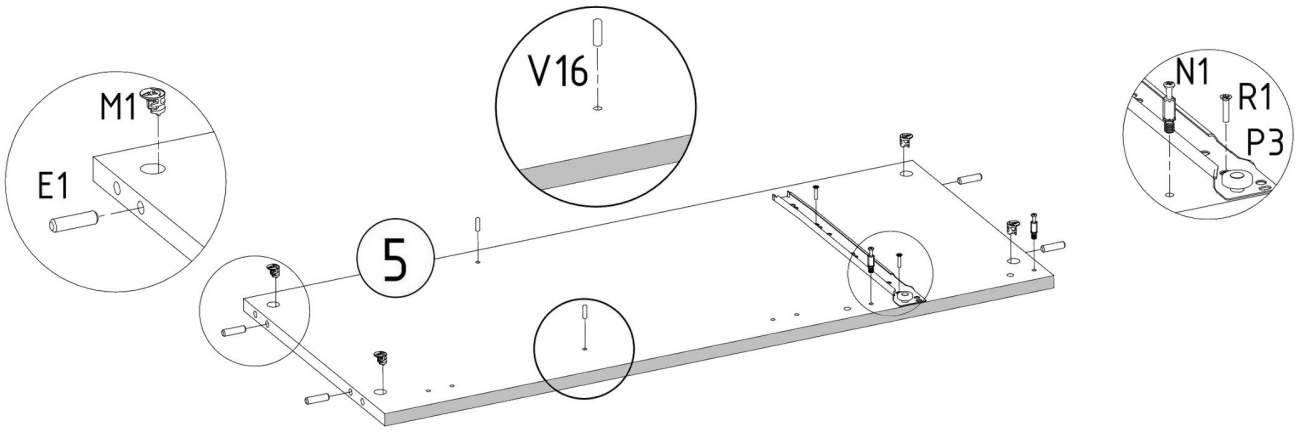

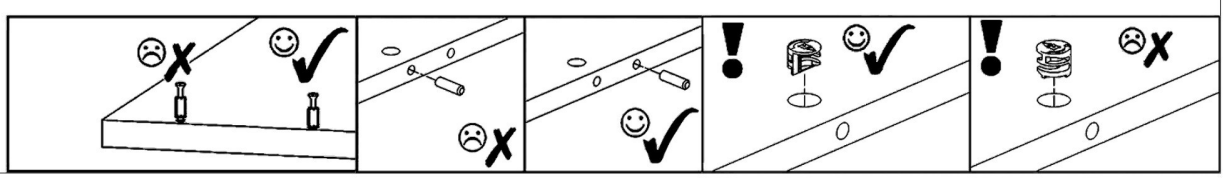

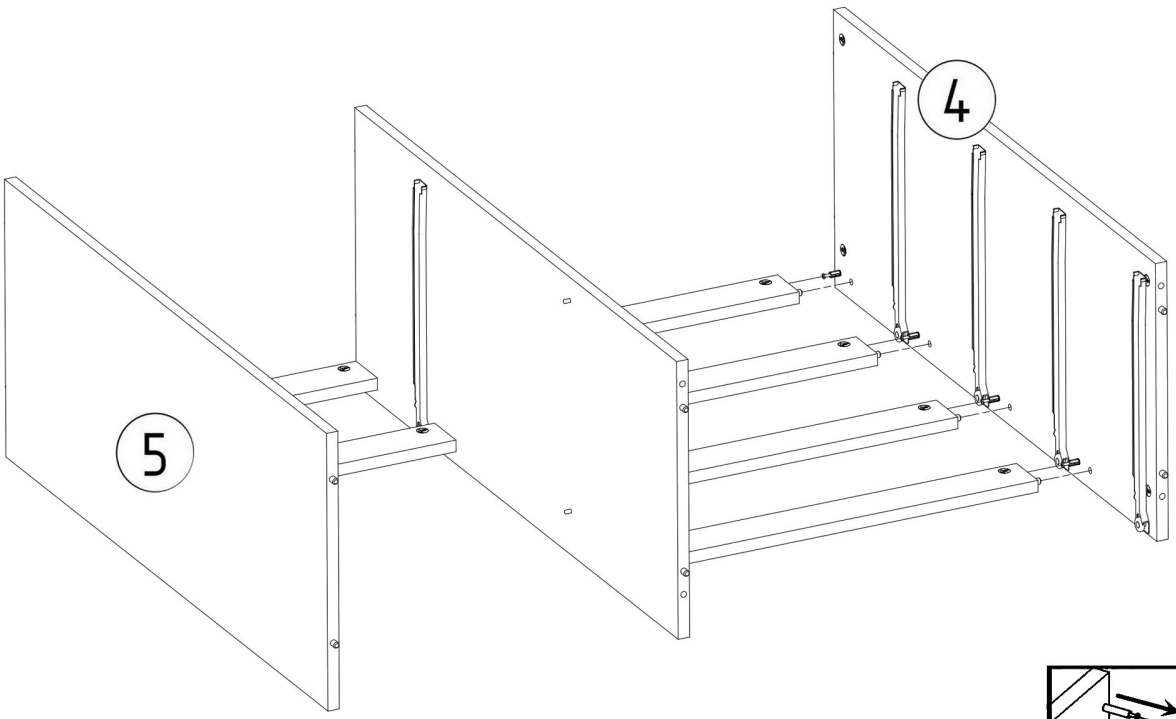

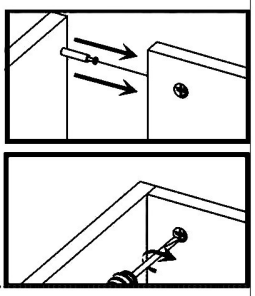

N1



L=35mm x12

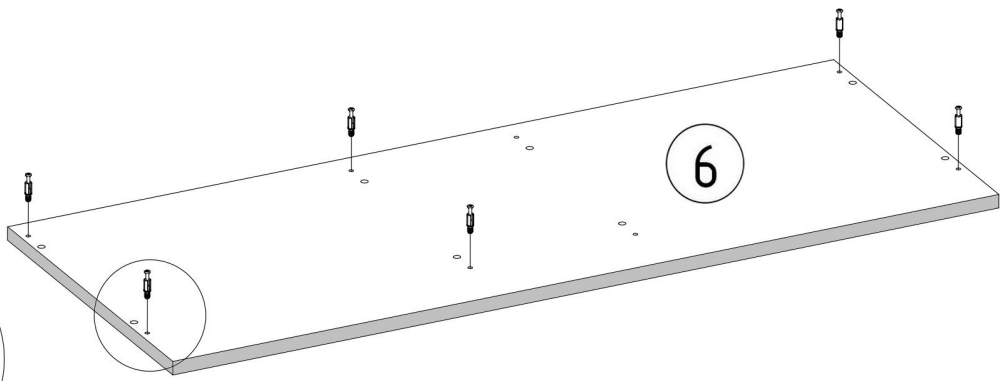

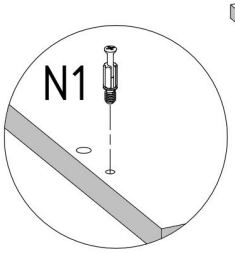

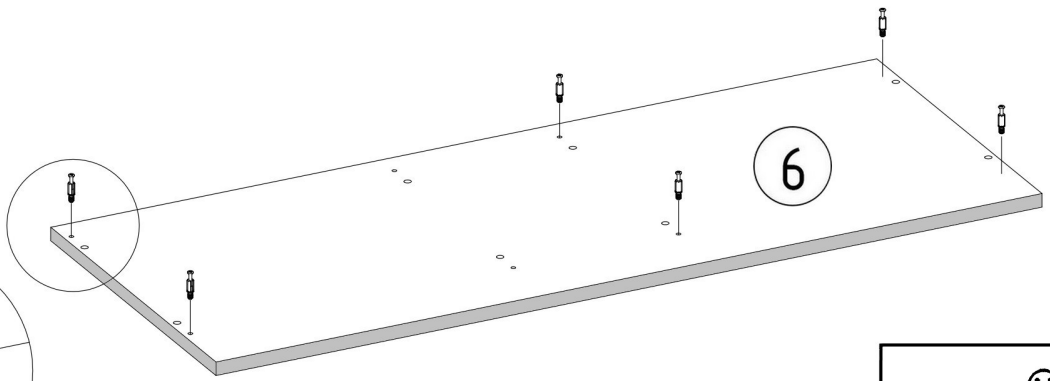

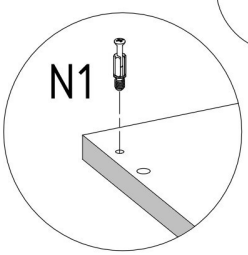

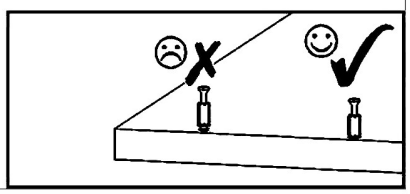

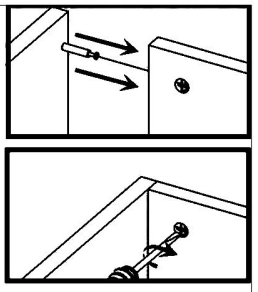

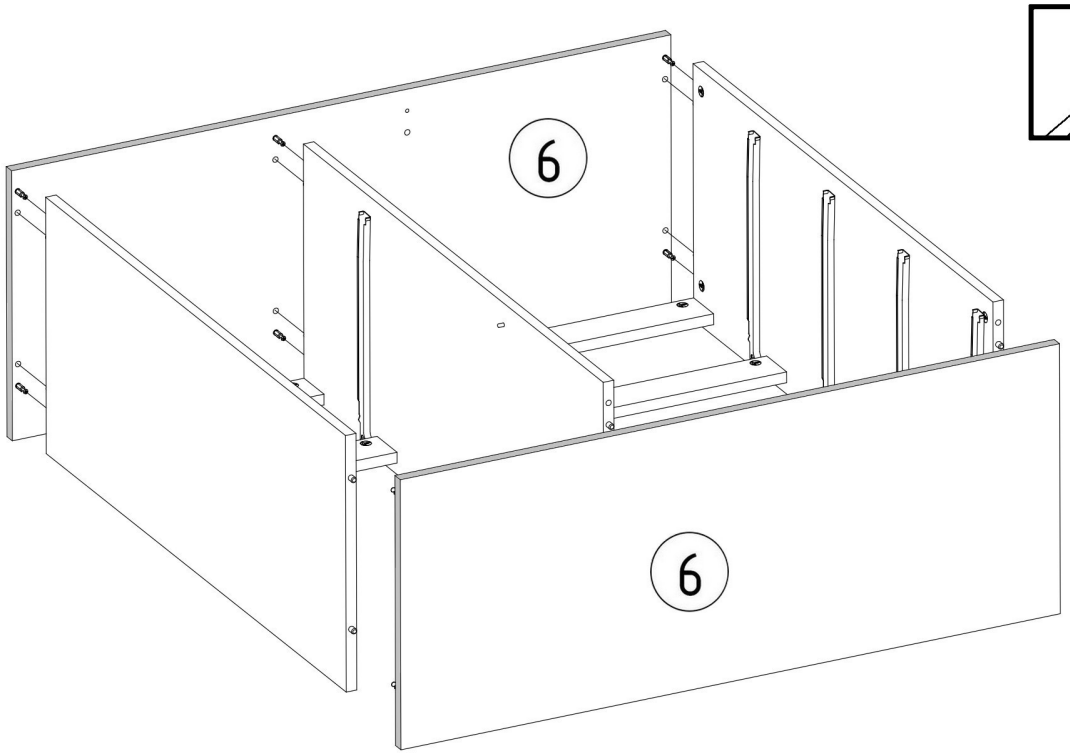
6
6

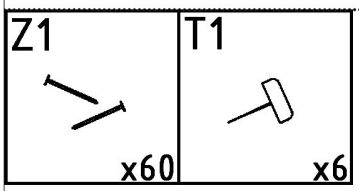
Z1
x60
T1
x6

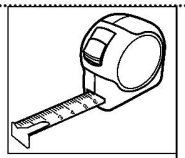

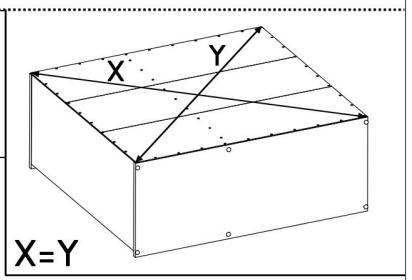
X
Y
X=Y

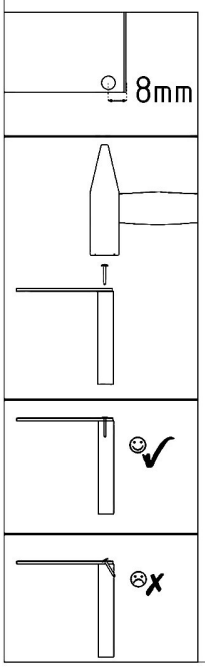
8mm

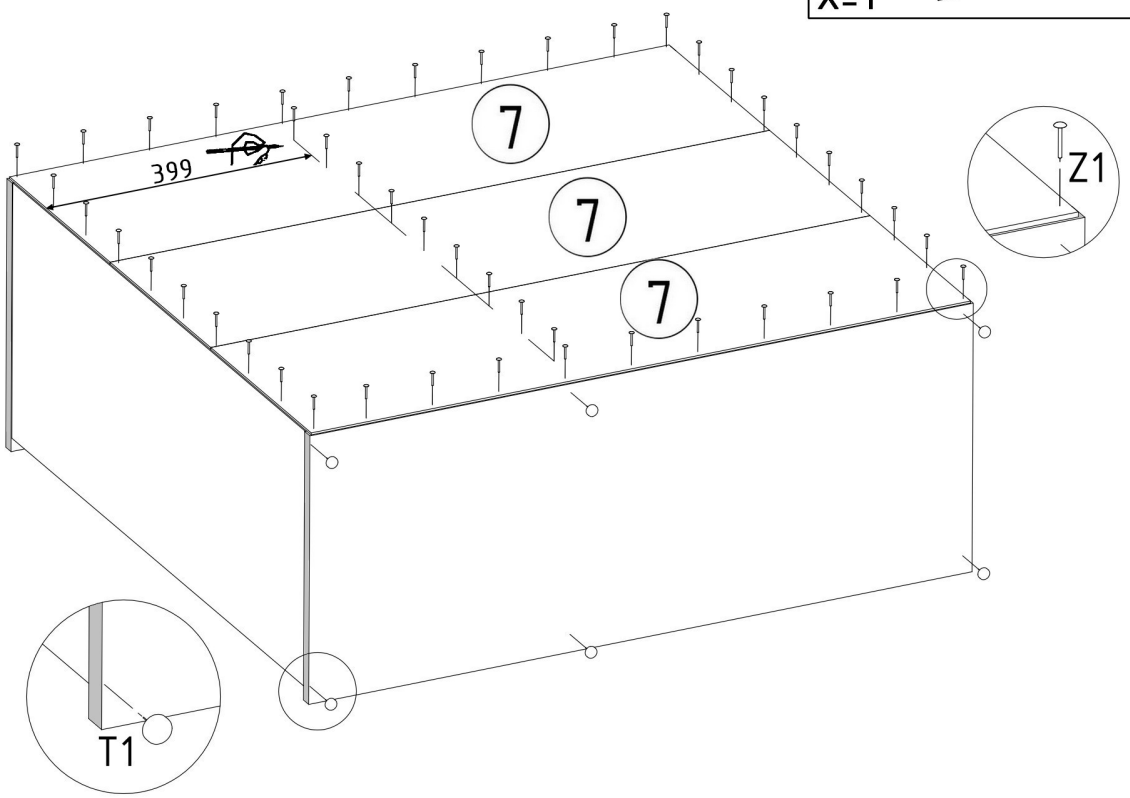
399
7
7
7
Z1
T1

A1

ZP x2

S1

3,5x16mm x4

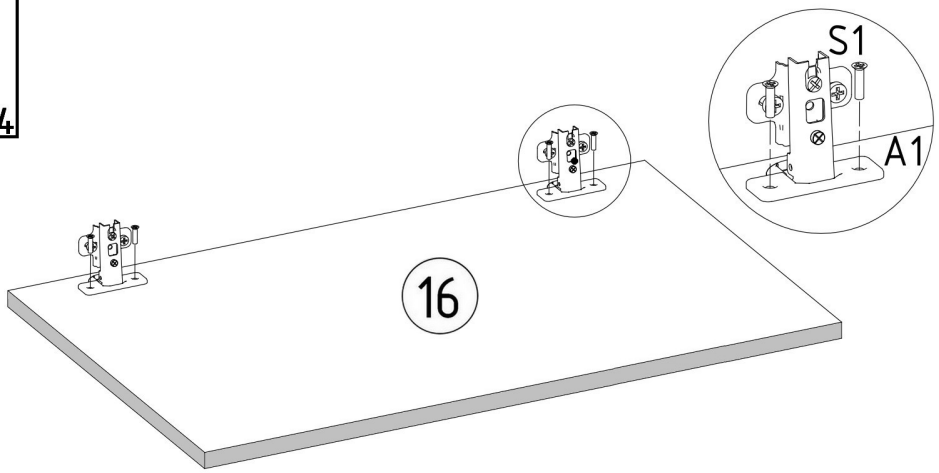

N1

L=35mm x10

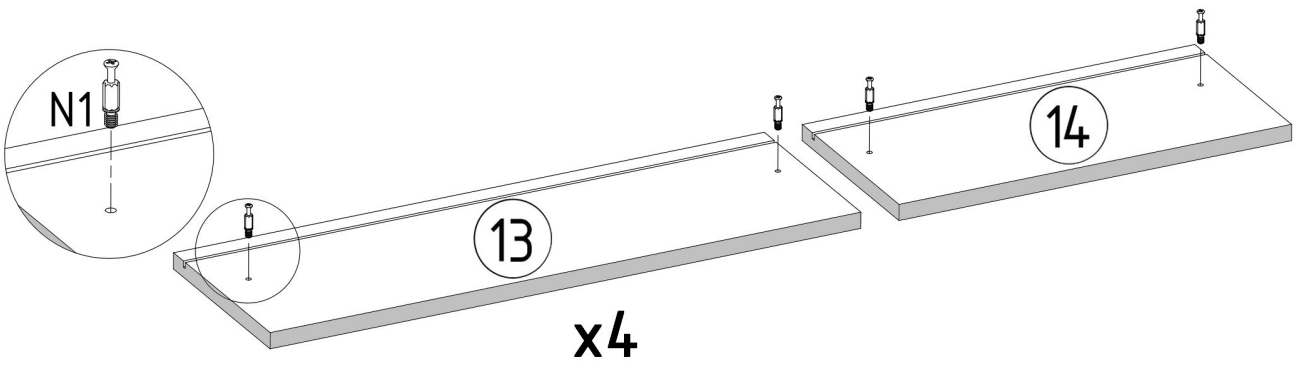

x4

M1

12x15mm x10

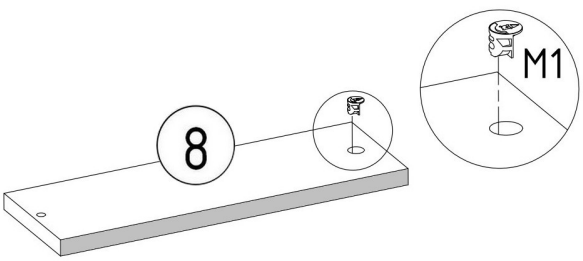

x10

F1

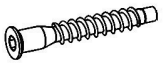

7x50mm x10

F3

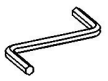

Hex 4mm

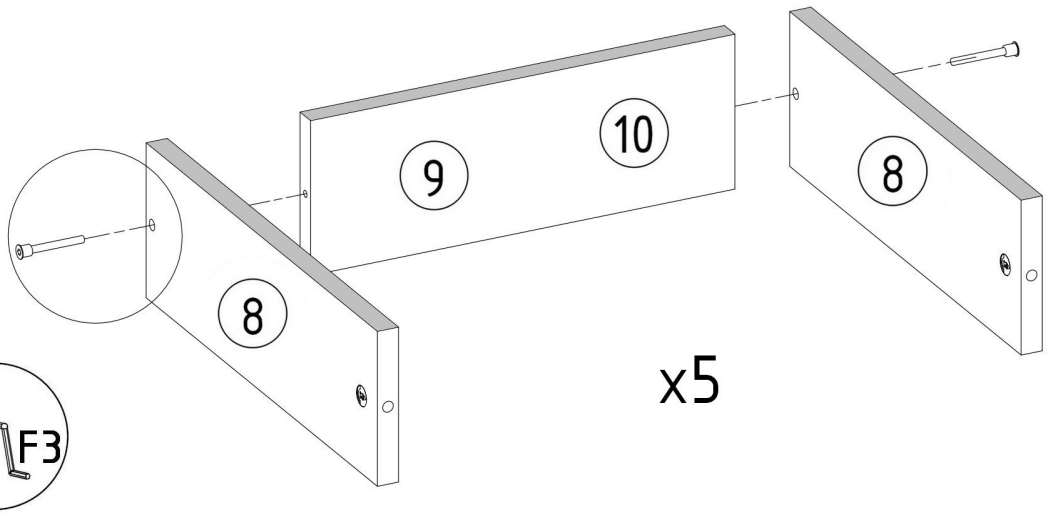



B1



ø17/4mm x10

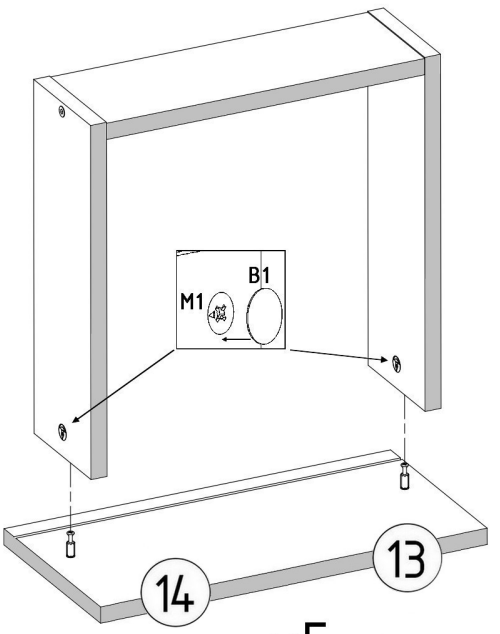

1.

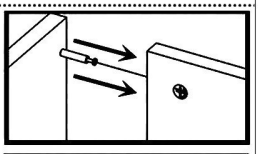

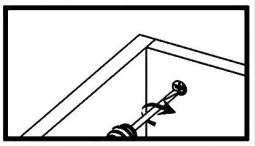

2.

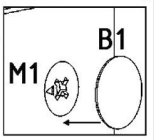

Z1



x30

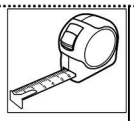

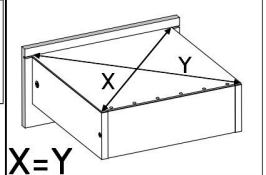

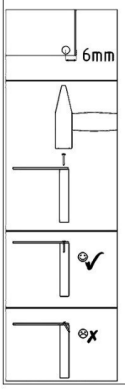

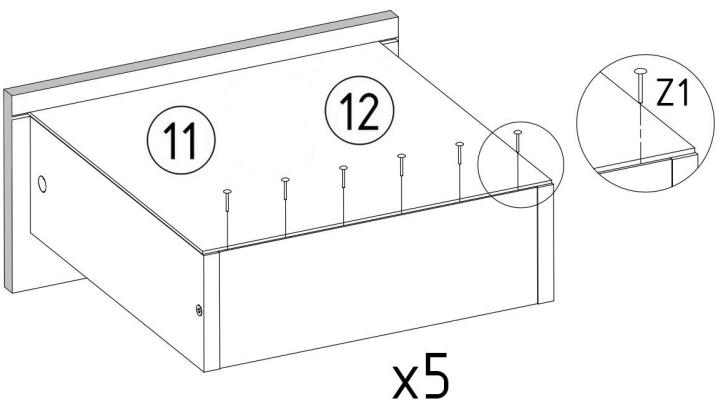

S1

3,5x16mm x20

P3

L=350mm x5

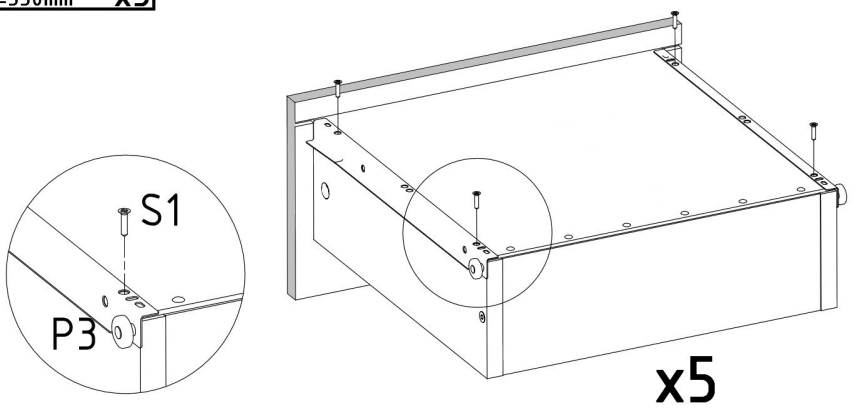

V13

x1

