INSTRUKCJA MONTAŻU

# Biurko 143 cm z regałem, szufladą i schowkiem

Kolor: Biały

Kod produktu: OR10386

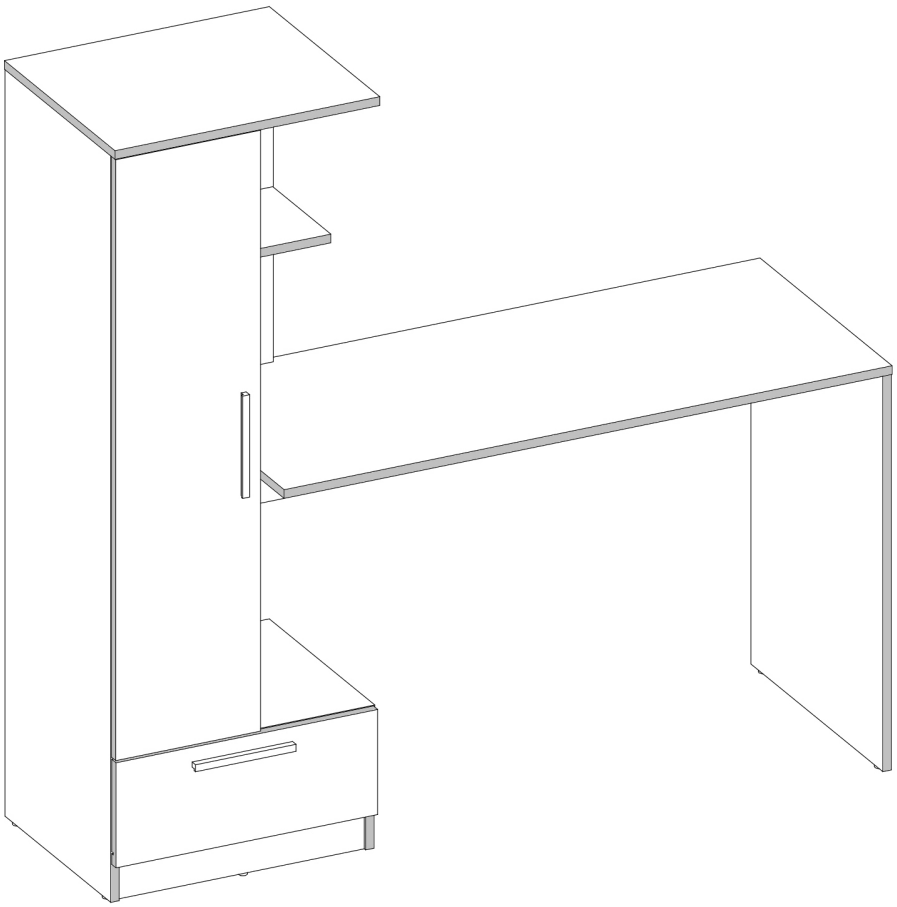

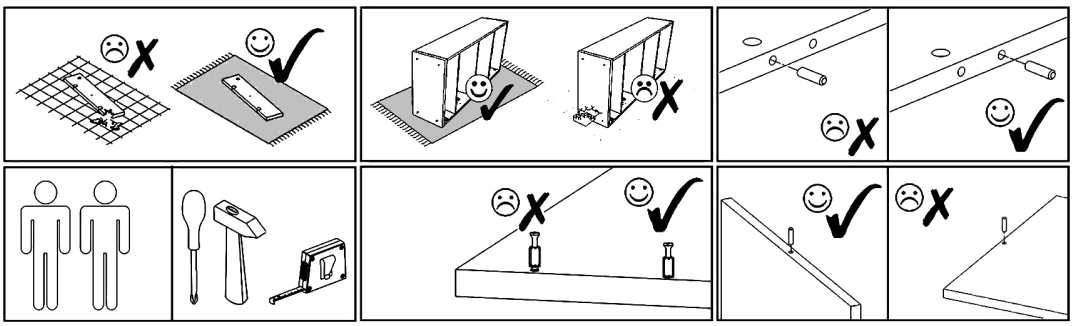

| | | | | |
|---|---|---|---|---|
| B2<br>K<br>ø12/4mm x2 | U3<br>CZ<br>L=190/160 x2 | V13<br>x1 | V15<br>x3 | V12<br>GLUE<br>x1 |

| | | | | | | | |
|---|---|---|---|---|---|---|---|
| S1<br>3,5x16mm x8 | T1<br>x7 | P3<br>L=350mm x1 | Z1<br>x50 | V16<br>5x16mm x8 | B1<br>B<br>ø17/4mm x2 | B2<br>B<br>ø12/4mm x2 | B2<br>S-A<br>ø12/4mm x2 |

| | | | | | | | |
|---|---|---|---|---|---|---|---|
| M1<br>12x15mm x16 | E1<br>8x30mm x25 | R1<br>6x8mm x4 | F1<br>7x50mm x14 | F3<br>Hex 4mm x1 | A1<br>ZP x2 | N1<br>L=35mm x16 | R7<br>4x27mm x4 |

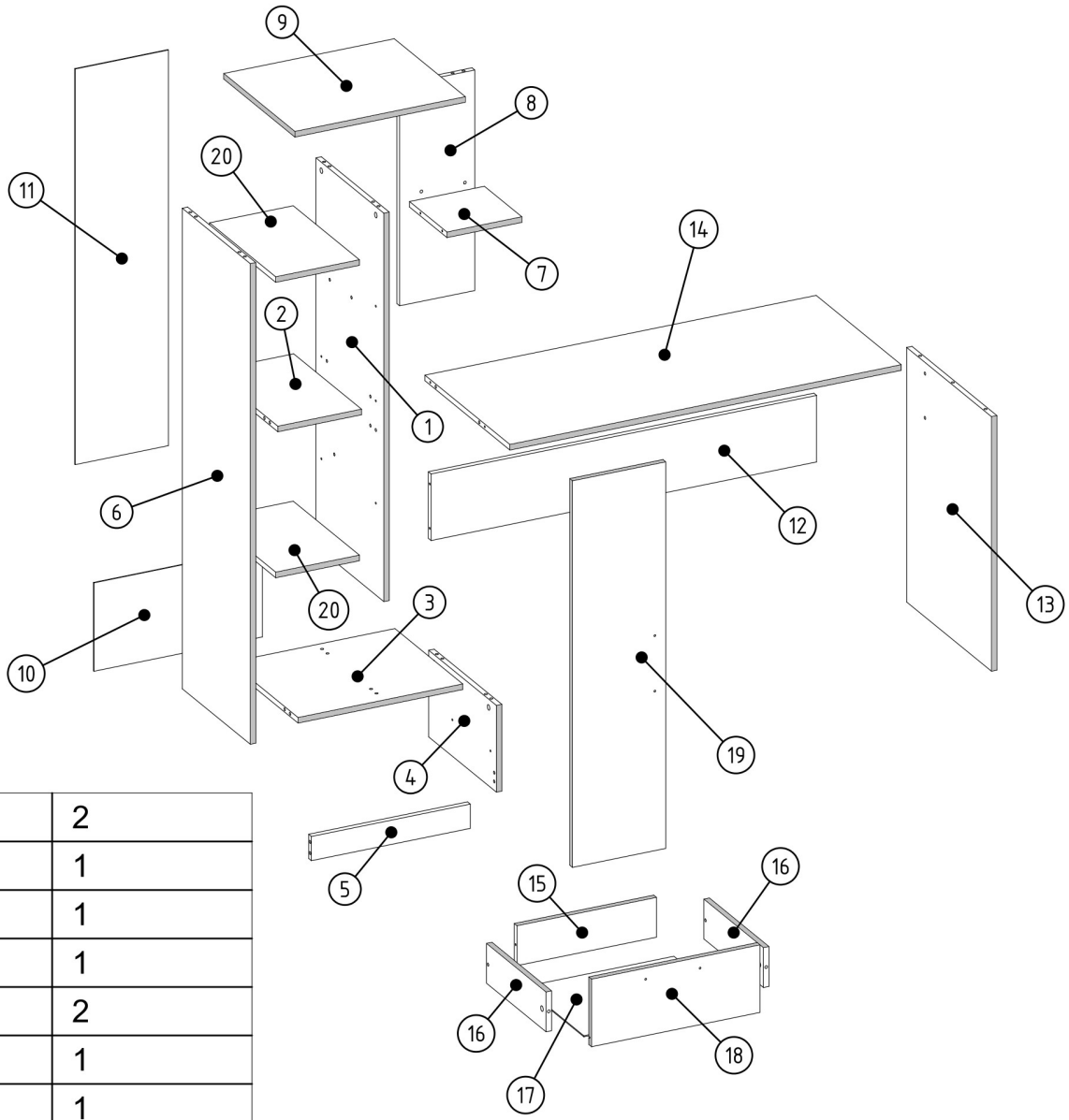


| 001626 | 20 | 2 |
|---|---|---|
| 001633 | 19 | 1 |
| 001632 | 18 | 1 |
| 001620 | 17 | 1 |
| 000053 | 16 | 2 |
| 001619 | 15 | 1 |
| 001637 | 14 | 1 |
| 001628 | 13 | 1 |
| 001629 | 12 | 1 |
| 001631 | 11 | 1 |
| 001630 | 10 | 1 |
| 001623 | 9 | 1 |
| 001627 | 8 | 1 |
| 001622 | 7 | 1 |
| 001636 | 6 | 1 |
| 001634 | 5 | 1 |
| 001635 | 4 | 1 |
| 001624 | 3 | 1 |
| 001621 | 2 | 1 |
| 001625 | 1 | 1 |
| ID | NUMBER | QUANTITY |

| M1 | N1 | E1 | V16 |
|---|---|---|---|
| 12x15mm x2 | L=35mm x2 | 8x30mm x4 | 5x16mm x4 |

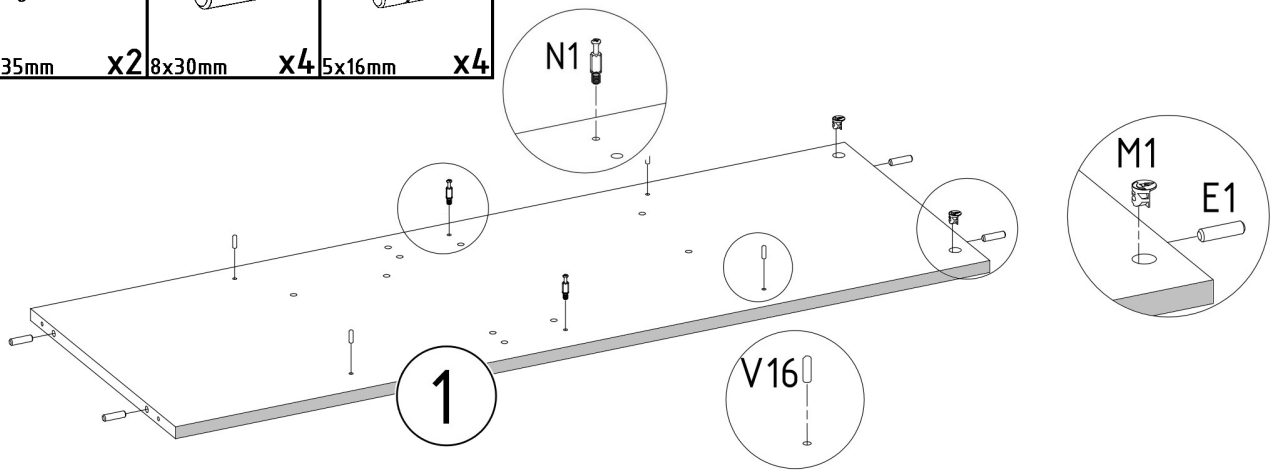


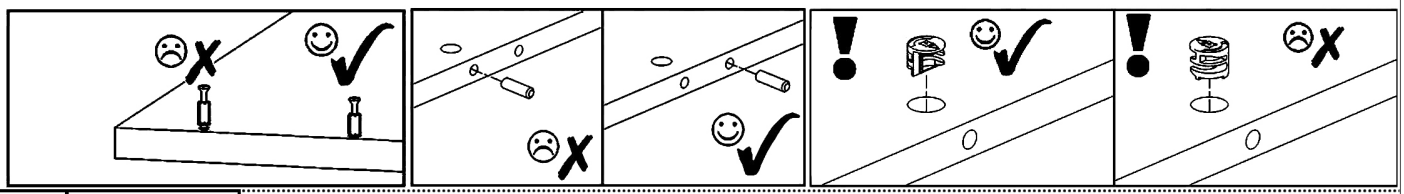

| M1 | E1 |
|---|---|
| 12x15mm x4 | 8x30mm x4 |

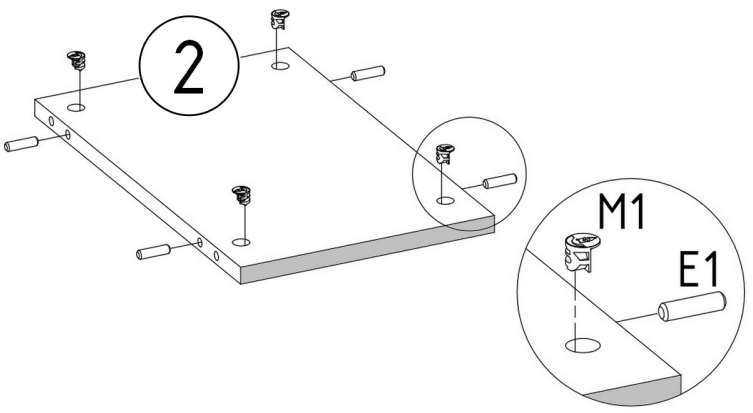


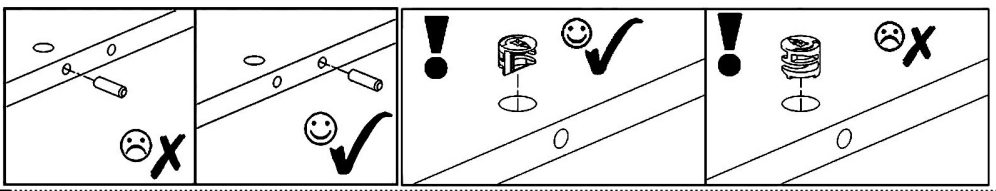

| M1 | N1 | E1 |
|---|---|---|
| 12x15mm x2 | L=35mm x2 | 8x30mm x2 |

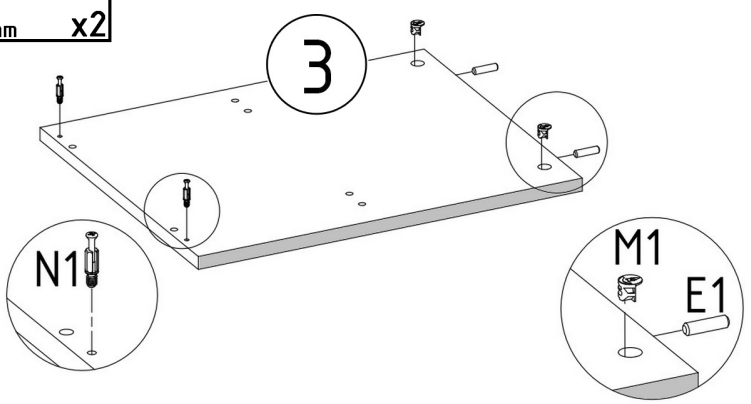

| F1 | F3 |
|---|---|
| 7x50mm x4 | Hex 4mm x1 |

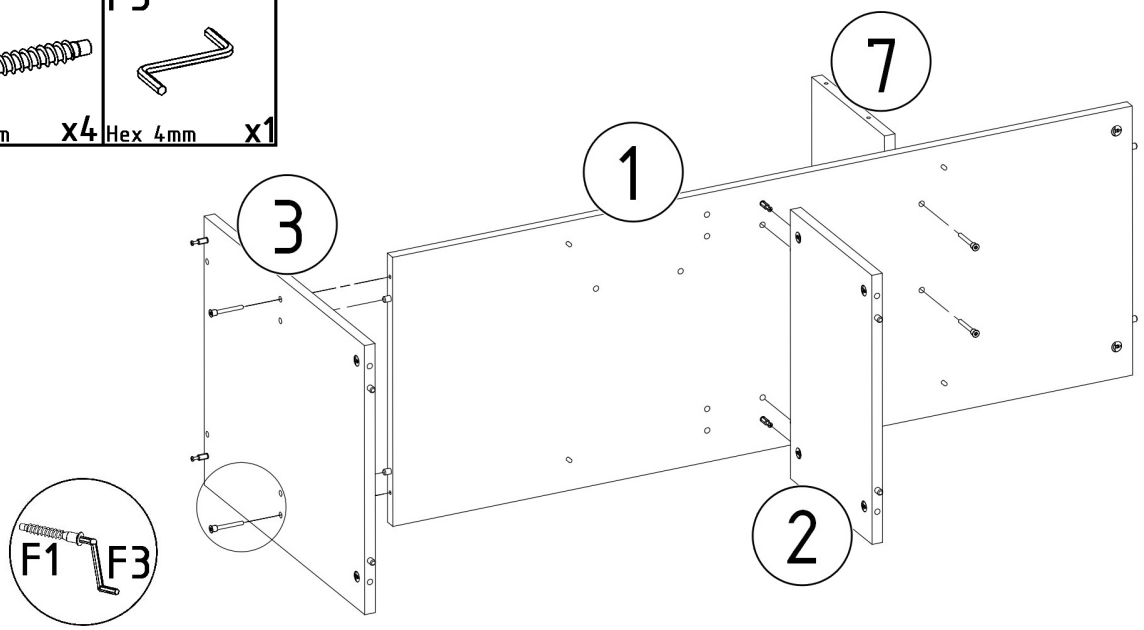


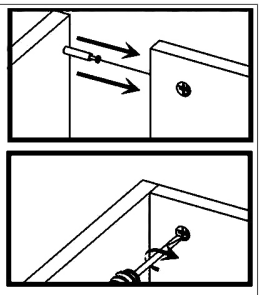

| M1 | E1 | T1 | P3 | R1 |
|---|---|---|---|---|
| 12x15mm x2 | 8x30mm x2 | x2 | L=350mm x1 | 6x8mm x2 |

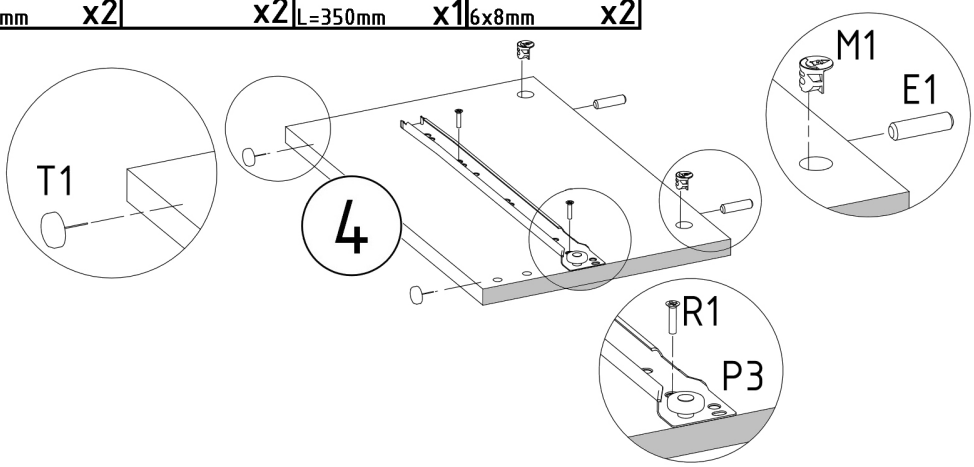


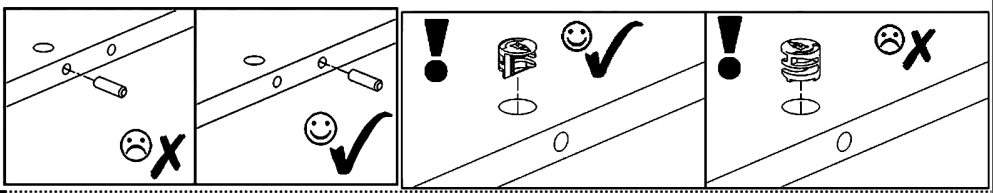

| E1 | T1 | V12 |
|---|---|---|
| 8x30mm x4 | x1 | GLUE x1 |

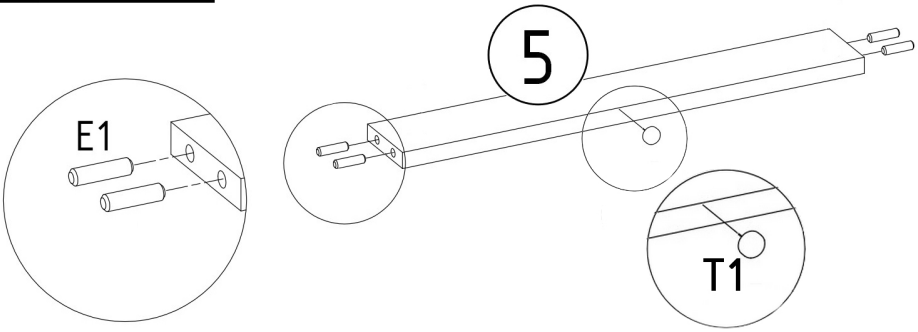


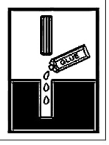

| M1 | E1 |
|---|---|
|  |  |
| 12x15mm x2 | 8x30mm x2 |

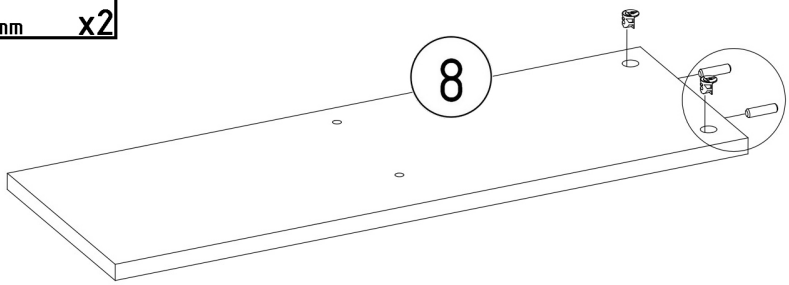


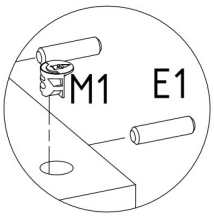


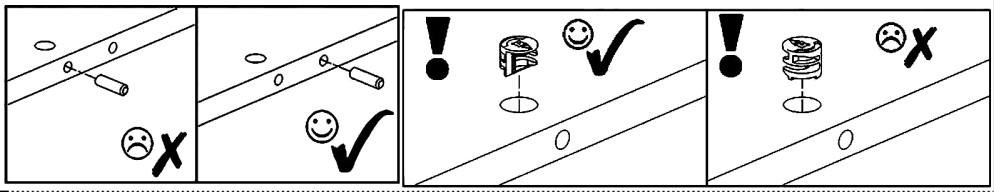

| F1 | F3 | V12 |
|---|---|---|
| 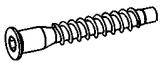 | 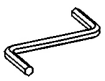 |  |
| 7x50mm x2 | Hex 4mm | |



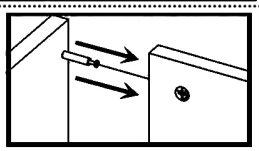

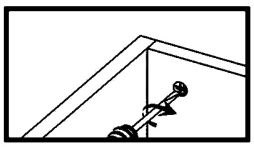

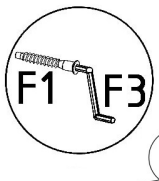





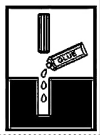


| N1 |
|---|
|  |
| L=35mm x6 |

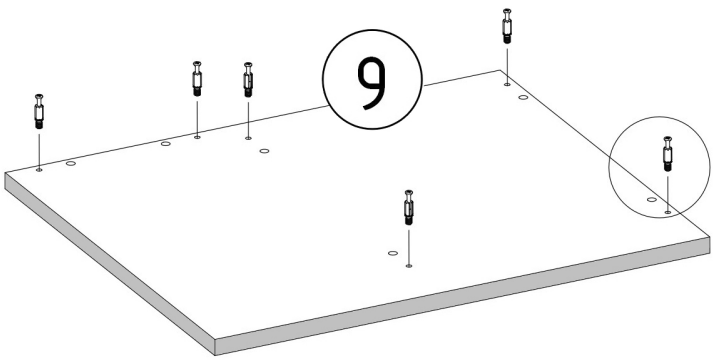


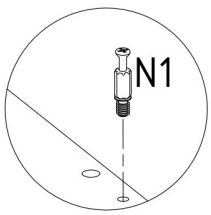


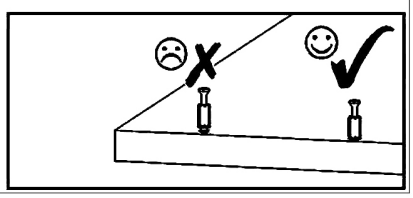

| M1 | E1 | T1 | N1 | V16 | P3 | R1 |
|---|---|---|---|---|---|---|
| 12x15mm x2 | 8x30mm x2 | x2 | L=35mm x4 | 5x16mm x4 | L=350mm x1 | 6x8mm x2 |

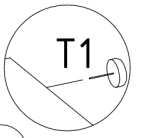


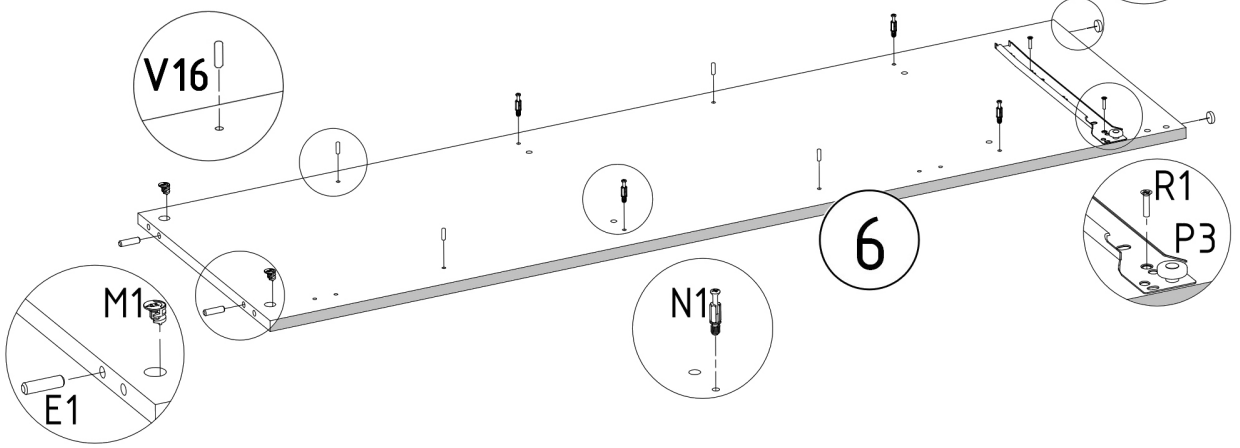


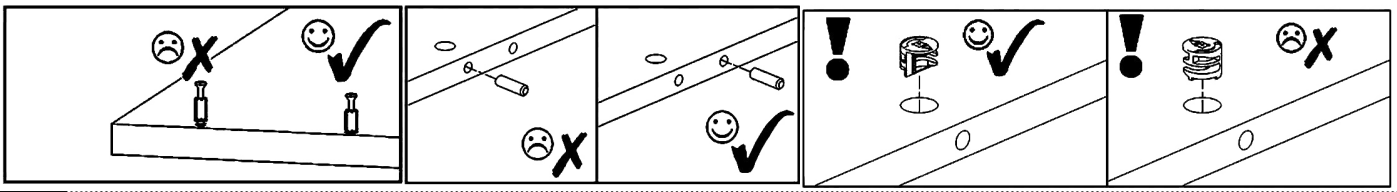

V12

GLUE

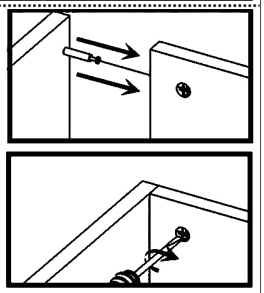

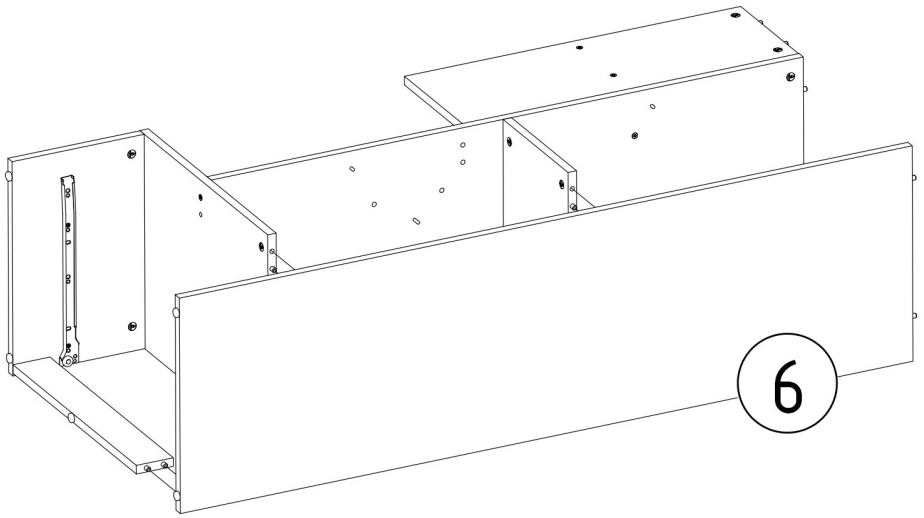


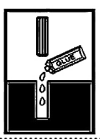


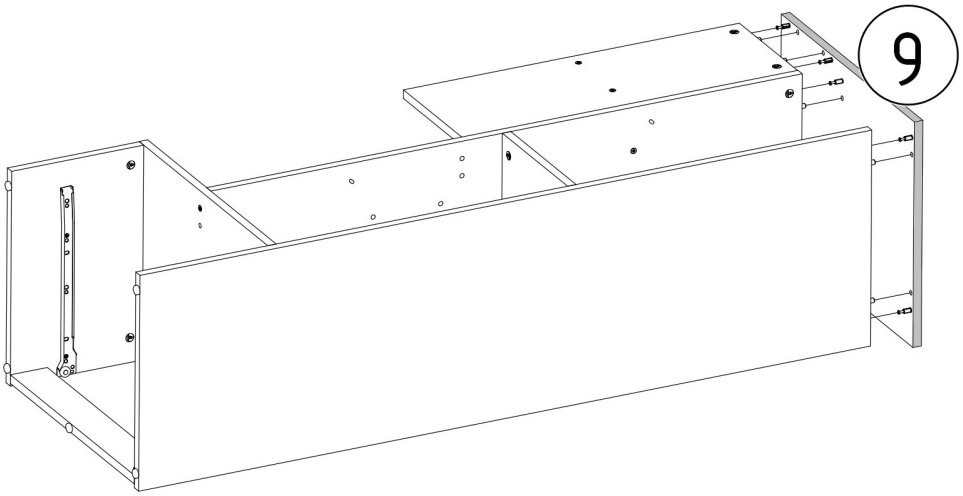


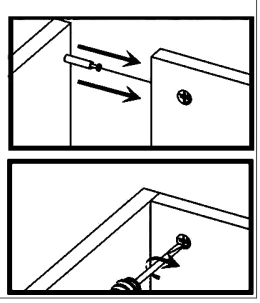

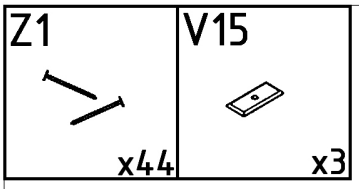
Z1
x44
V15
x3

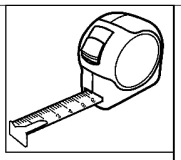

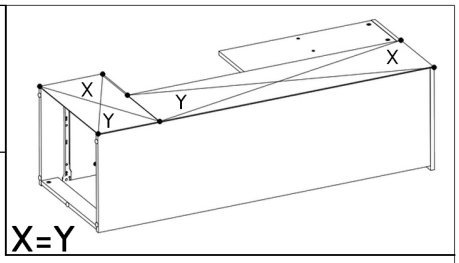
X
Y
Y
X
X=Y

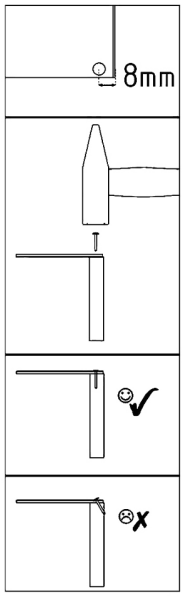
8mm

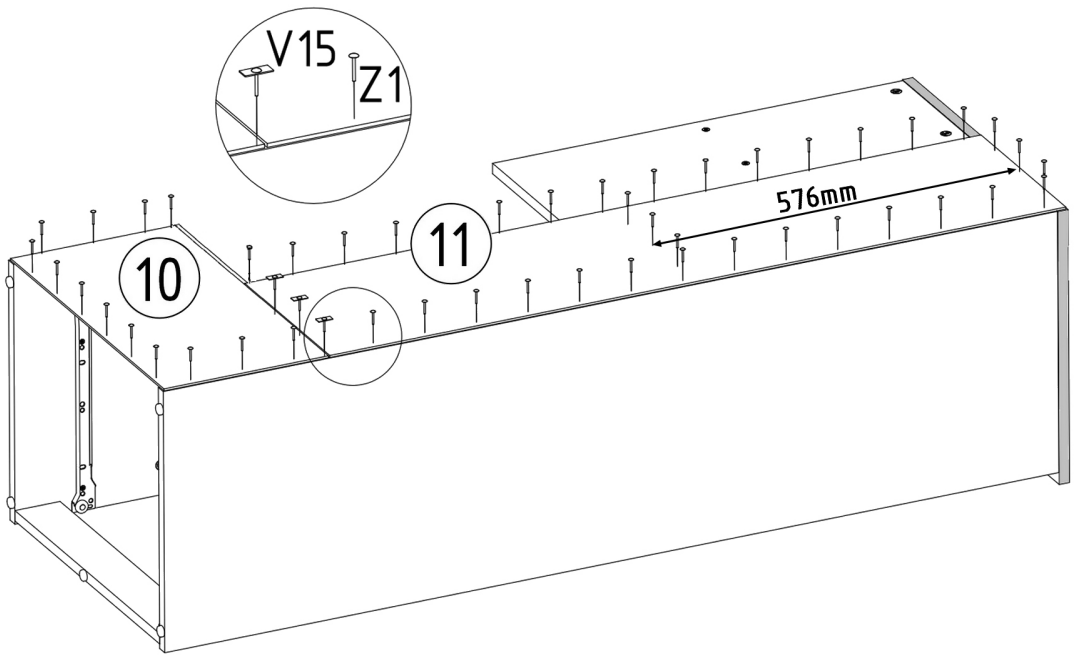
V15
Z1
10
11
576mm

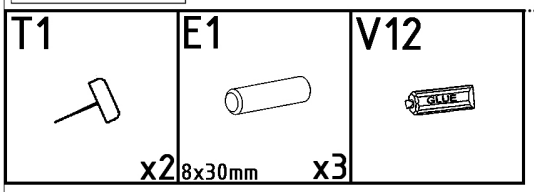
T1
x2
E1
8x30mm
x3
V12
GLUE

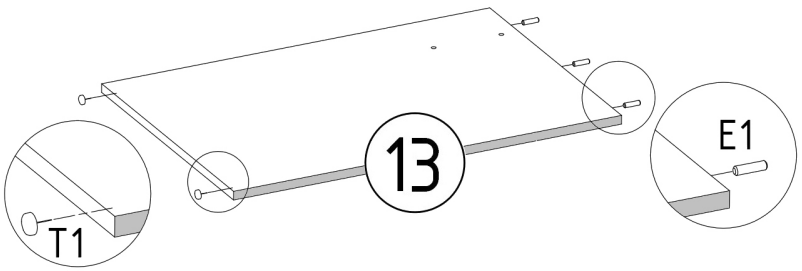
13
T1
E1

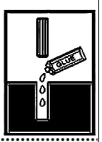
GLUE

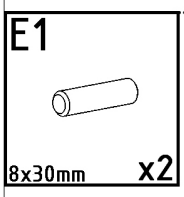
E1
8x30mm
x2

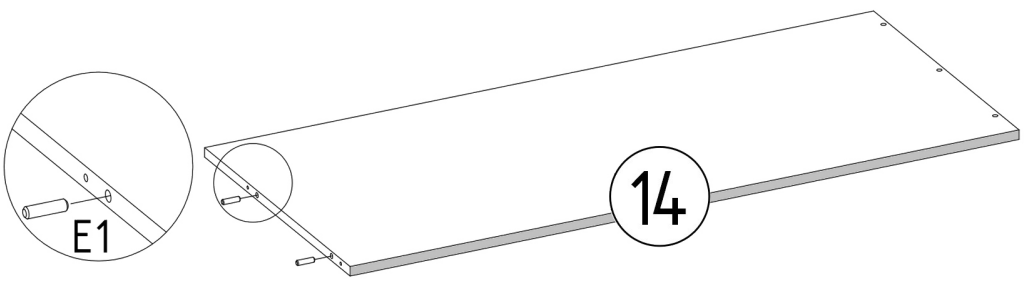
E1
14

F1

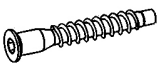

7x50mm x4

F3

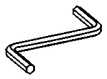

Hex 4mm

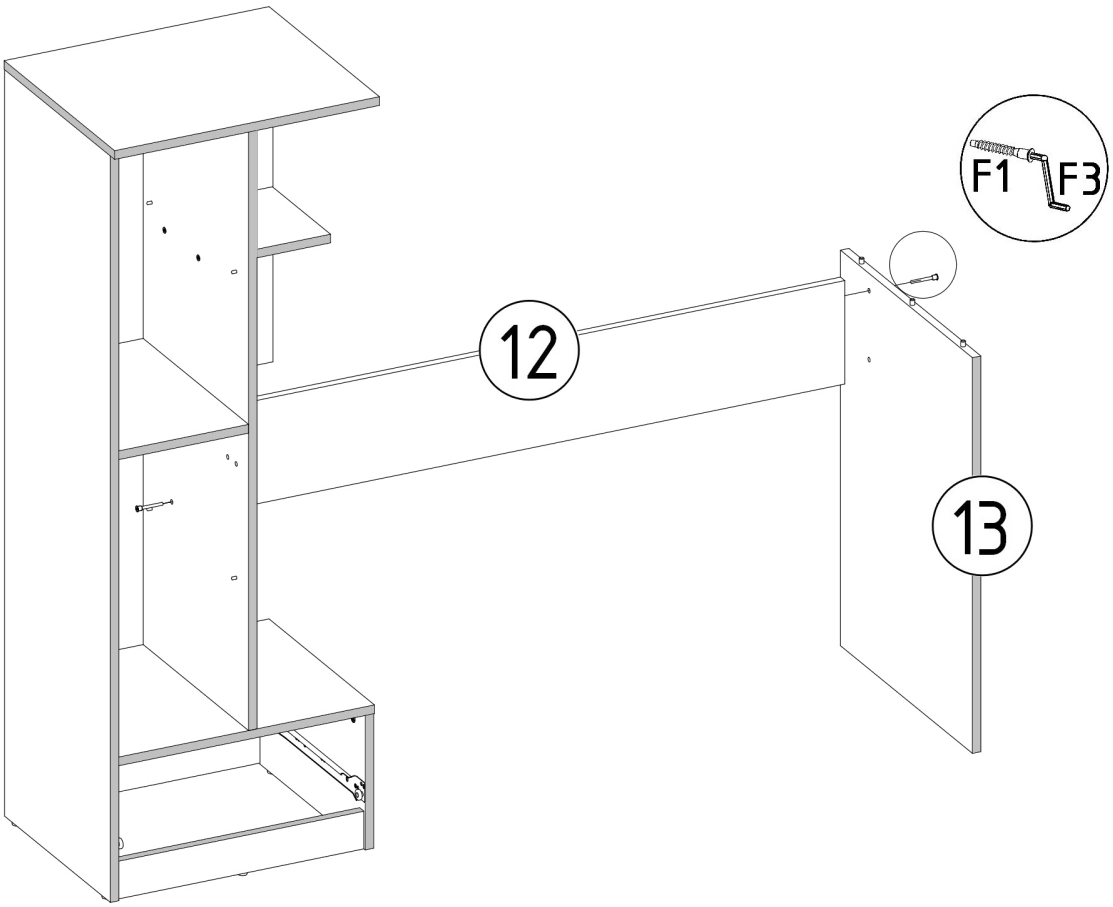


F1

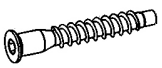

7x50mm x2

F3

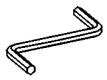

Hex 4mm

V12




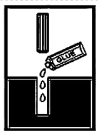


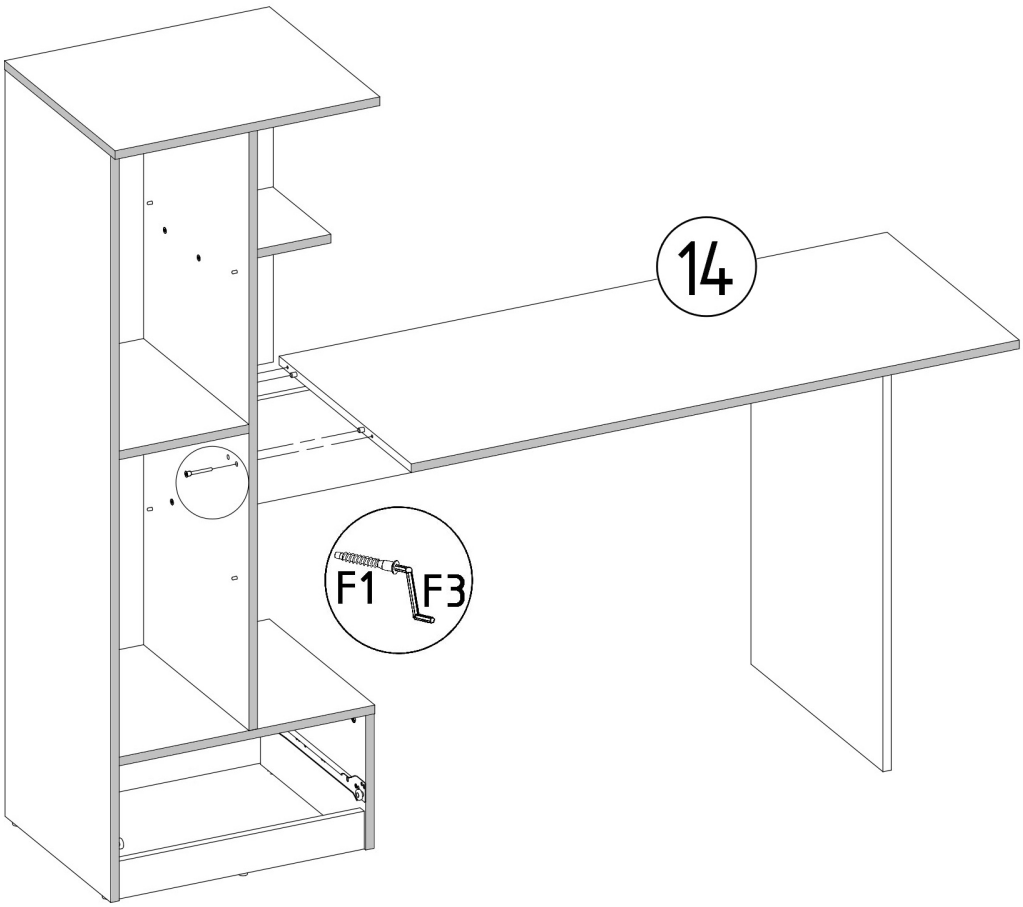

N1



L=35mm x2

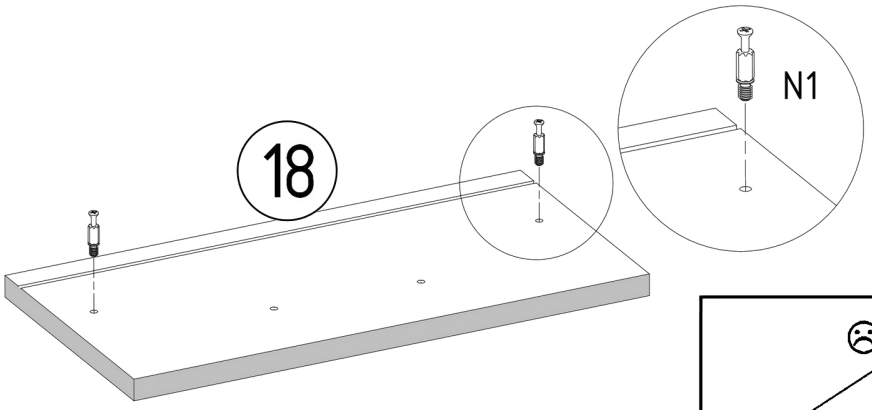


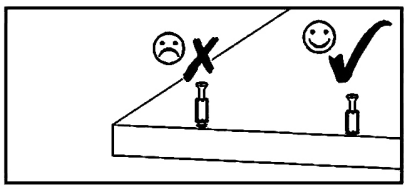

M1



12x15mm x2

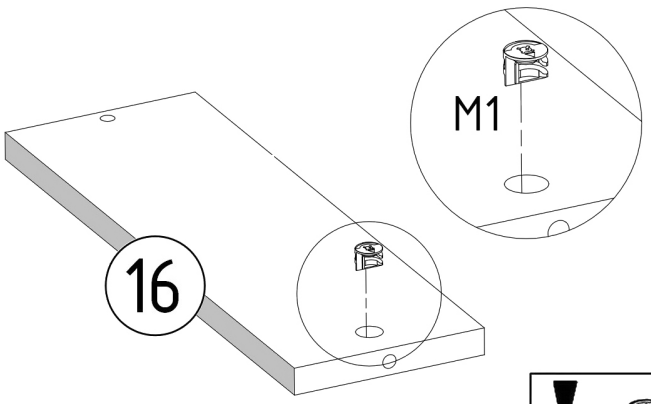


x2

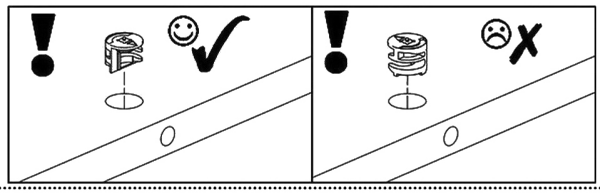

F1

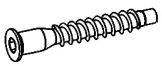

7x50mm x2

F3

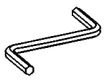

Hex 4mm

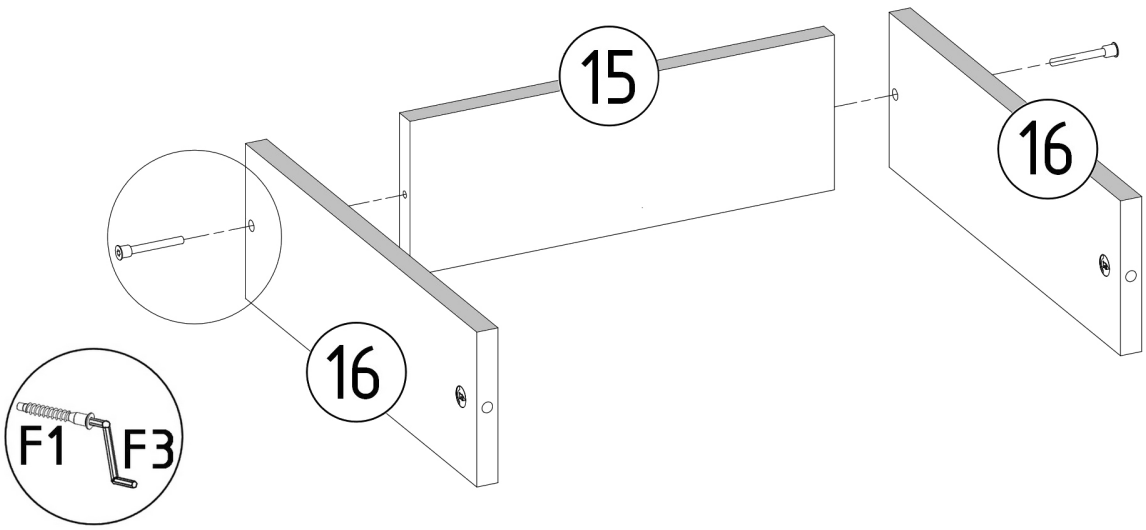

B1



ø17/4mm x2

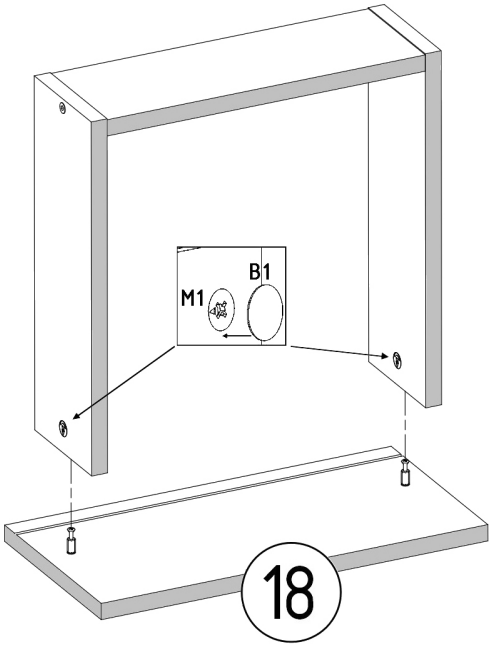


1.

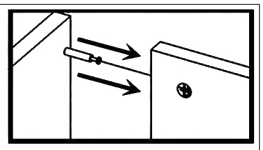

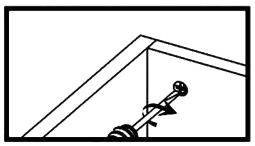

2.

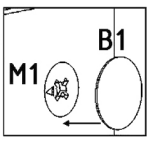


Z1



x6

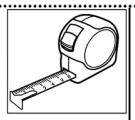

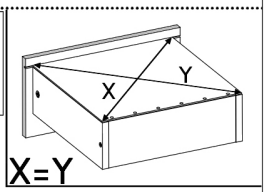


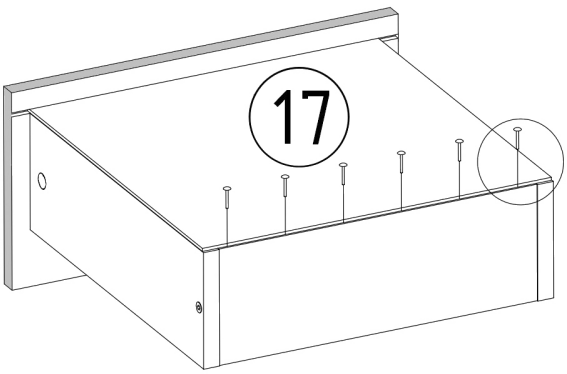


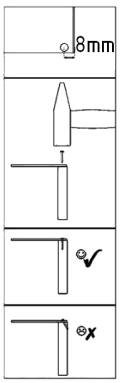


S1



3,5x16mm x4

P3

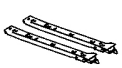

L=350mm x1

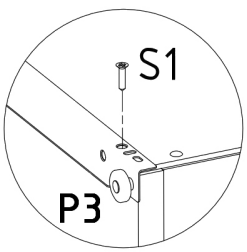


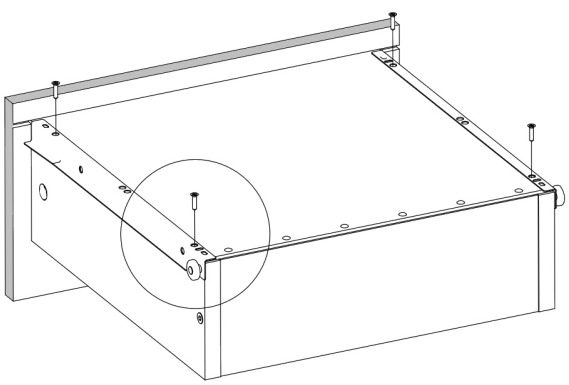

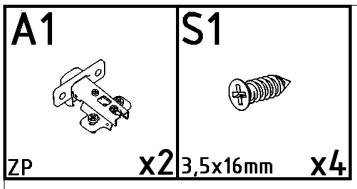
A1
ZP
x2
S1
3,5x16mm
x4

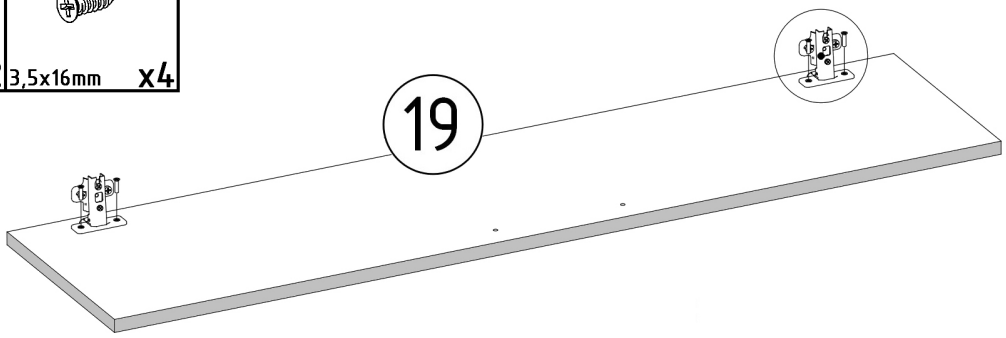
19

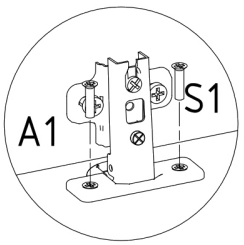
A1
S1

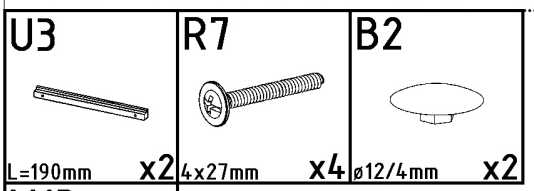
U3
L=190mm
x2
R7
4x27mm
x4
B2
ø12/4mm
x2

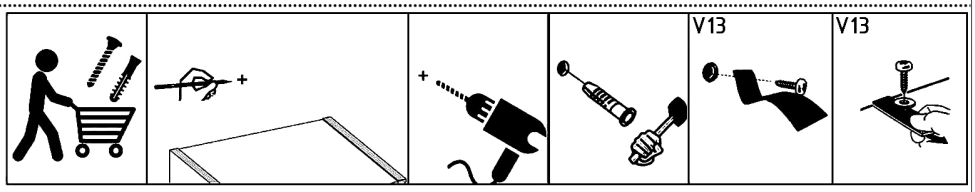
V13
V13

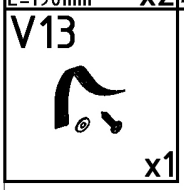
V13
x1

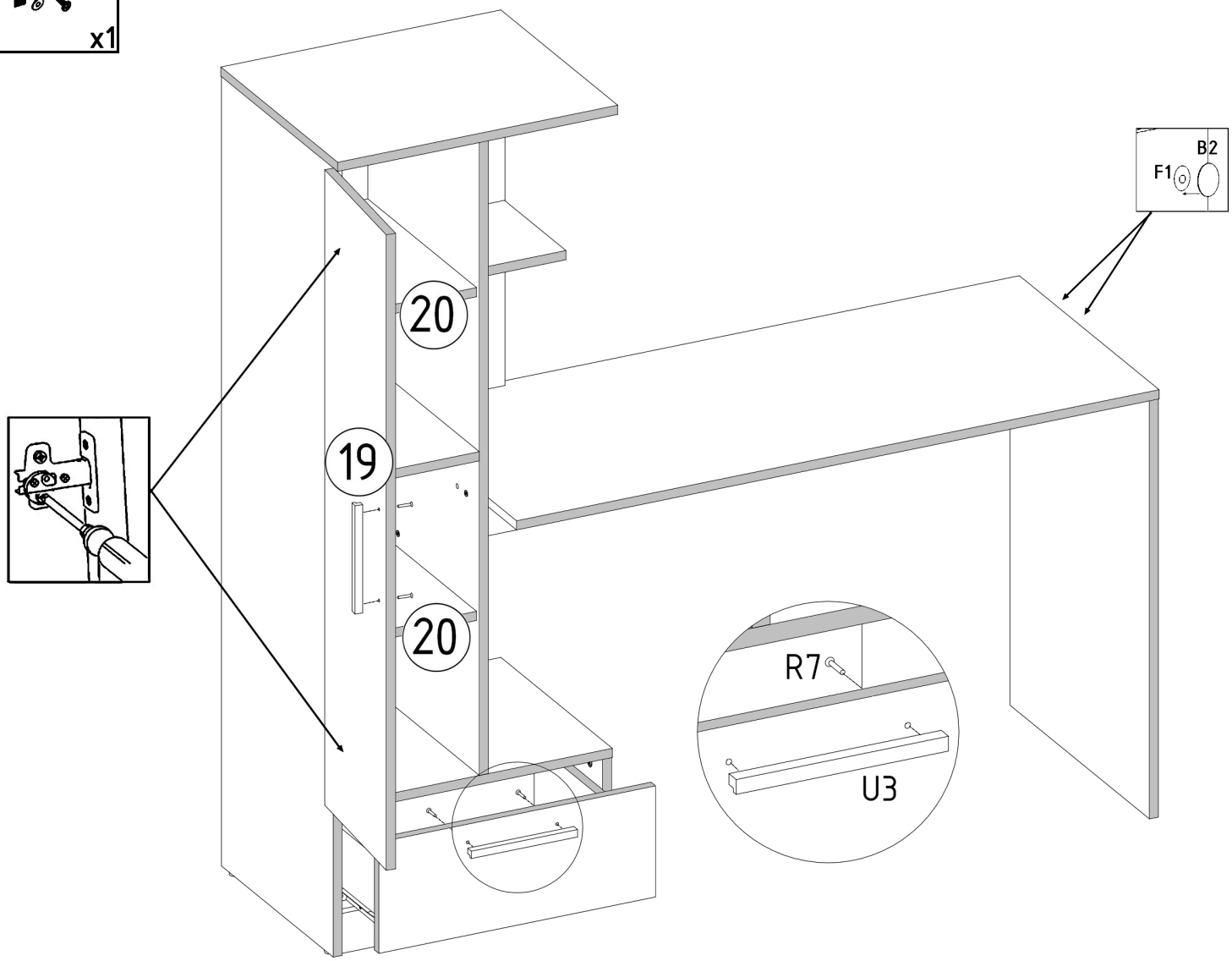
B2
F1
20
19
20
R7
U3

