INSTRUKCJA MONTAŻU

Płytka komoda 120 cm z 3 drzwiczkami i 2 szufladami, 30 cm głębokości

Kolor: Biały

Kod produktu: OR10213

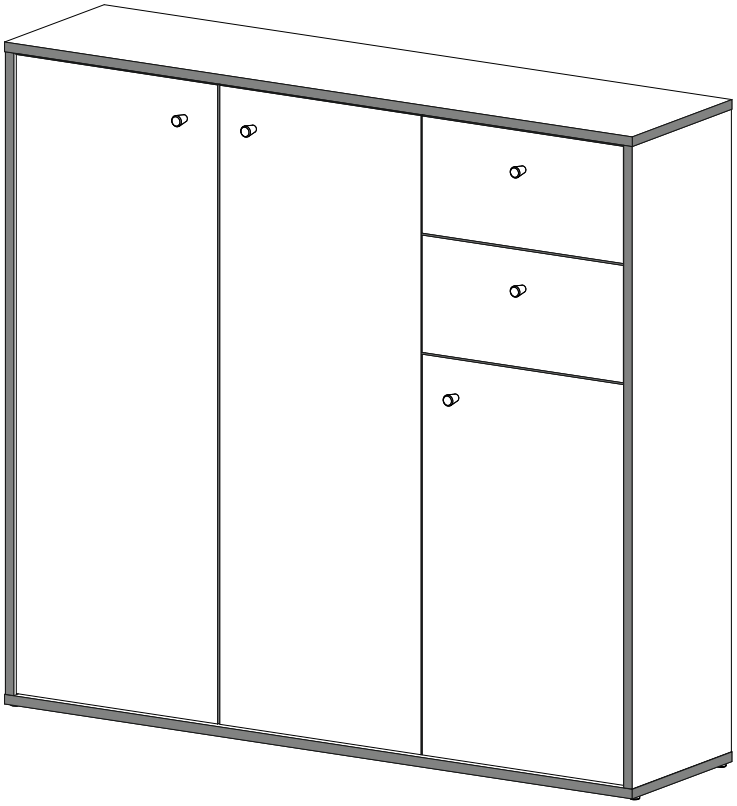

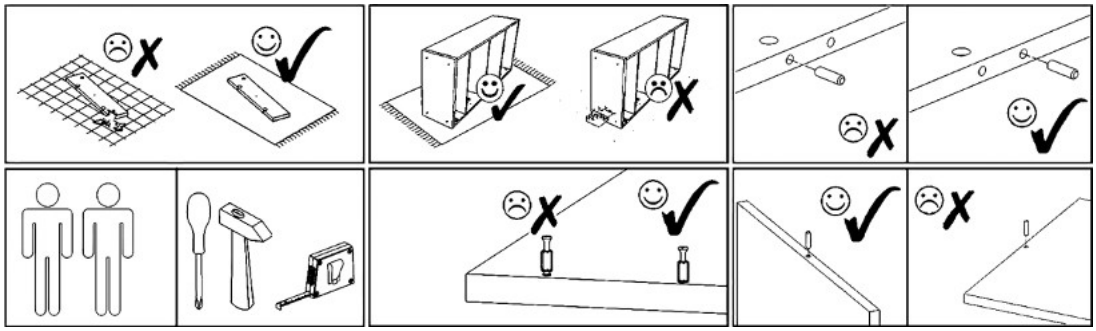

E1 8x30mm x12	N1 L=35mm x16	M1 12x15mm x16	F1 7x50mm x4	F3 Hex 4mm x1	T1 x5	V16 5x16mm x16	Z1 x100
S1 3,5x16mm x20	R1 6x8mm x8	S2 4x27mm x5	A2 ZW x4	A3 ZB x2	B1 B ø17/4mm x4	P1 L=250mm x2	V13 x1
U20 x5							

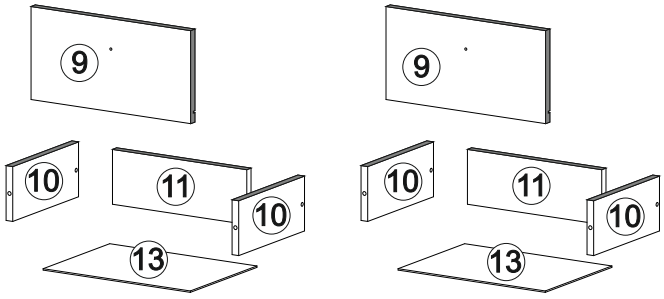

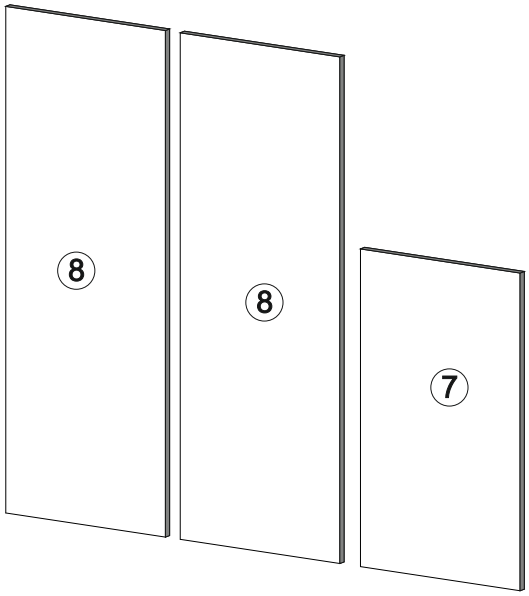

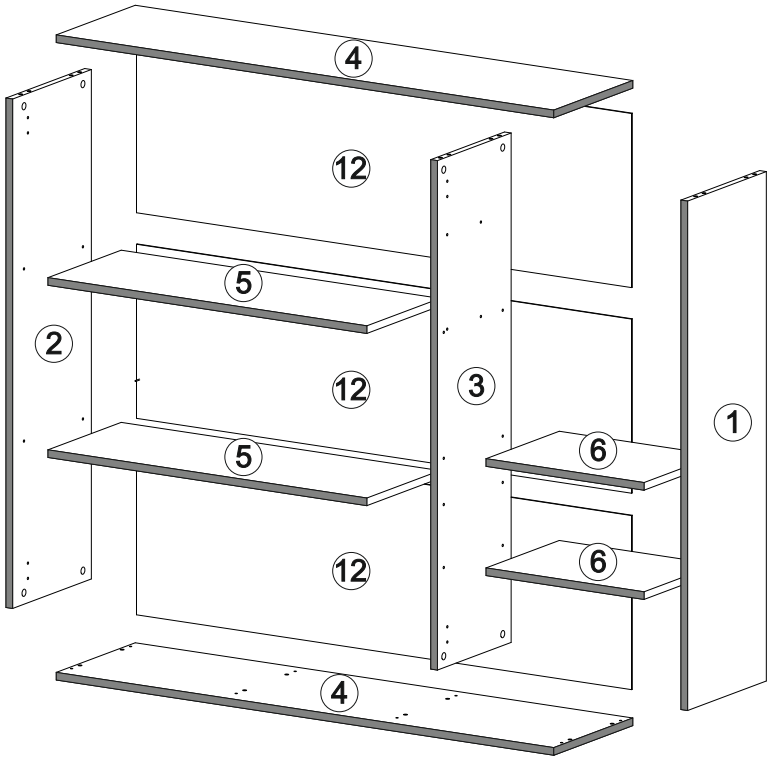

002292	1	1
002291	2	1
002297	3	1
002298	4	2
002295	5	2
002294	6	2
002290	7	1
002289	8	2
002293	9	2
ID	NUMBER	QUANTITY

000378	10	4
002287	11	2
002296	12	3
002288	13	2

E1	M1	P1	R1	V16
8x30mm x4	12x15mm x4	L=250mm x2	6x8mm x4	5x16mm x4

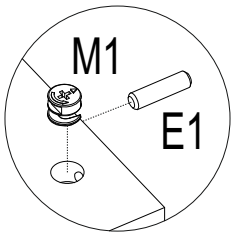

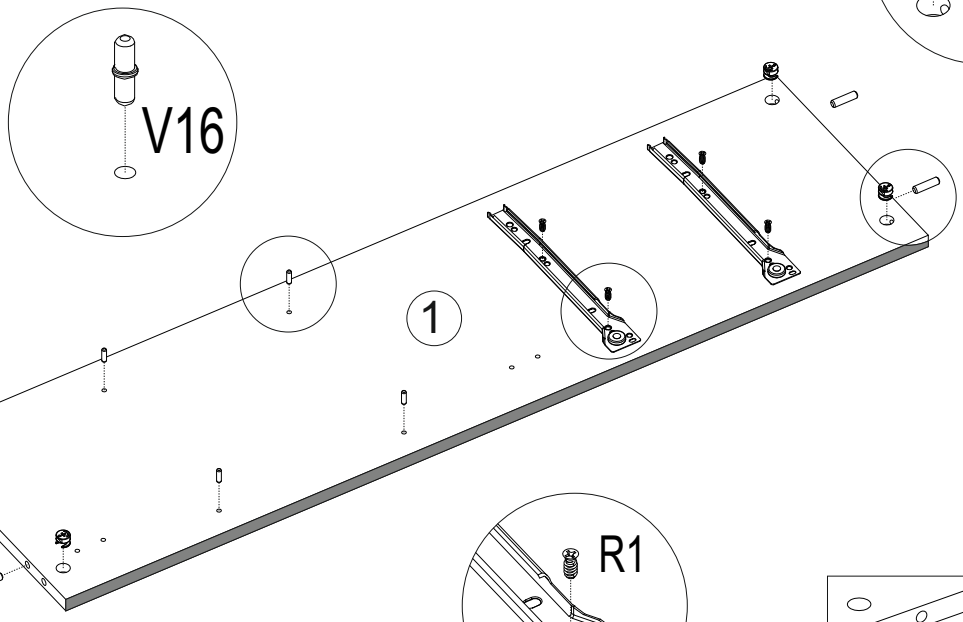

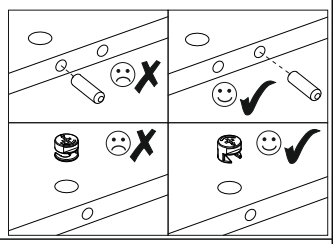

E1	V16	M1
8x30mm x4	5x16mm x4	12x15mm x4

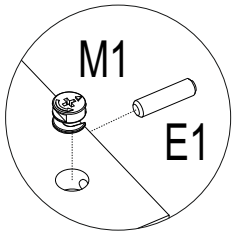

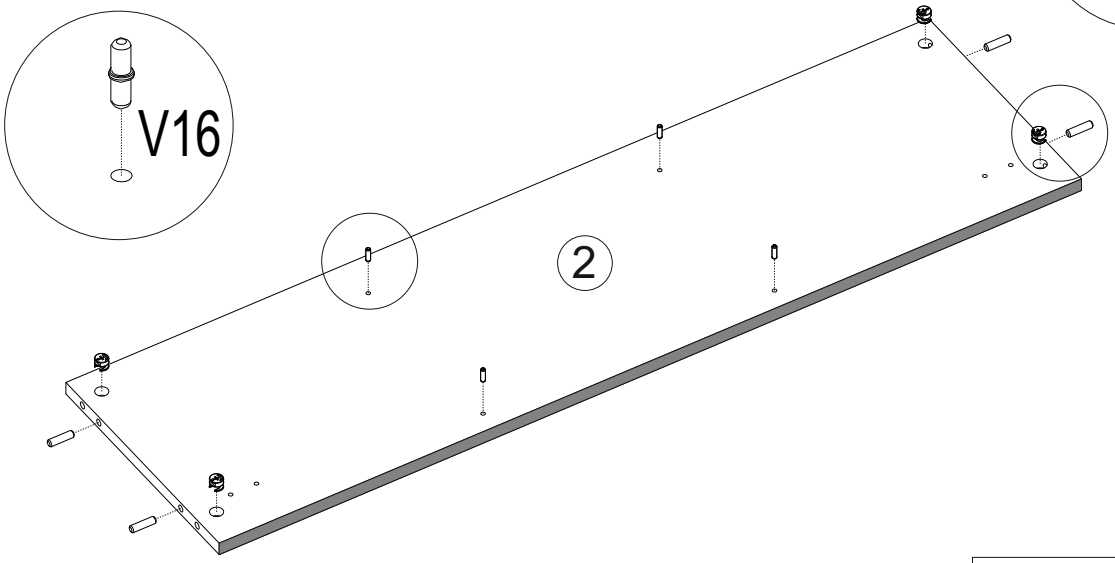

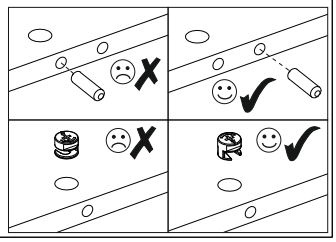

E1	V16	M1	P1	R1
8x30mm x4	5x16mm x8	12x15mm x4	L=250mm x2	6x8mm x4

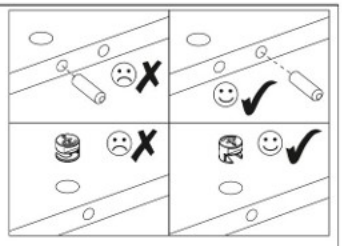

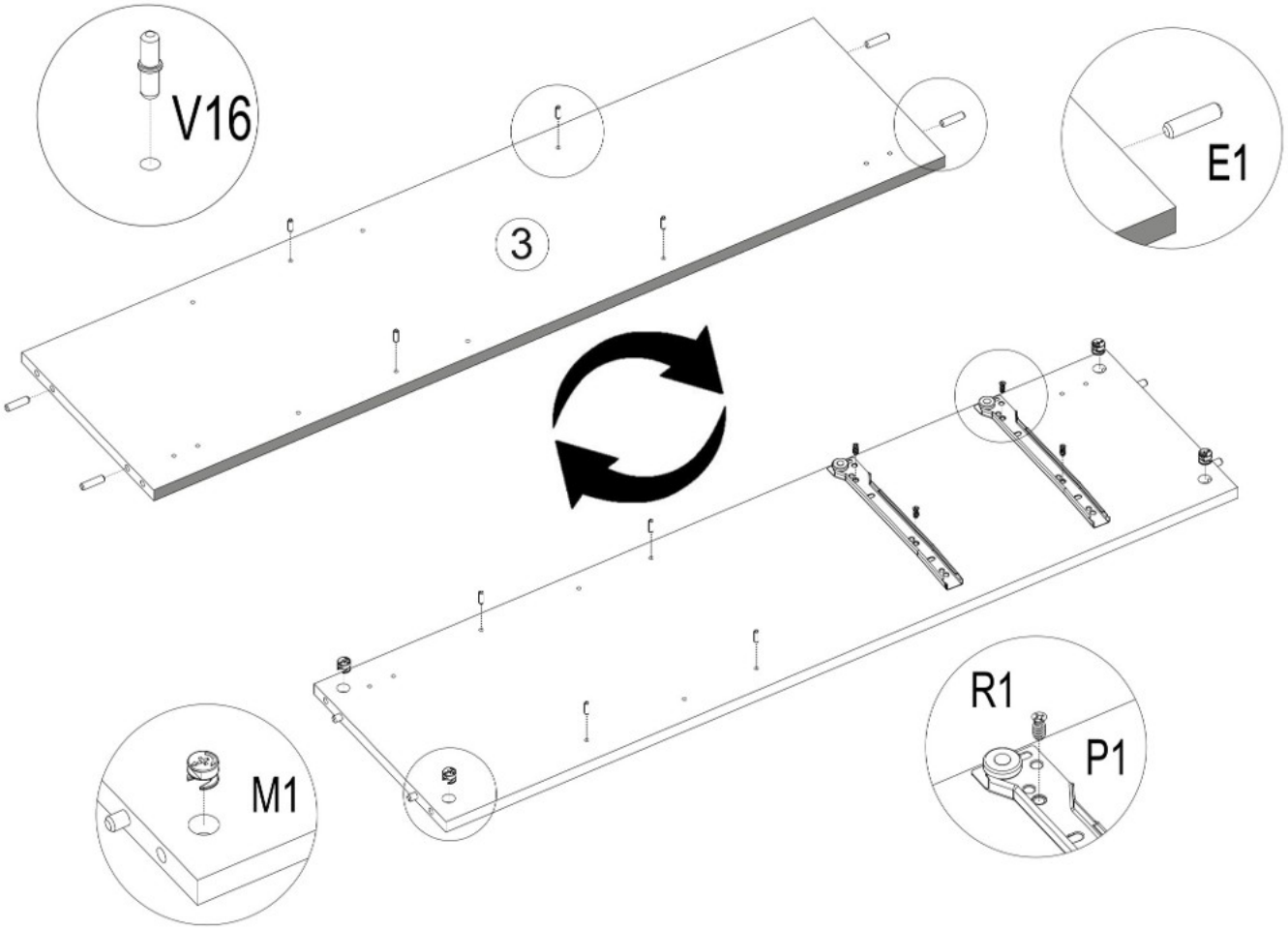

N1
L=35mm x6

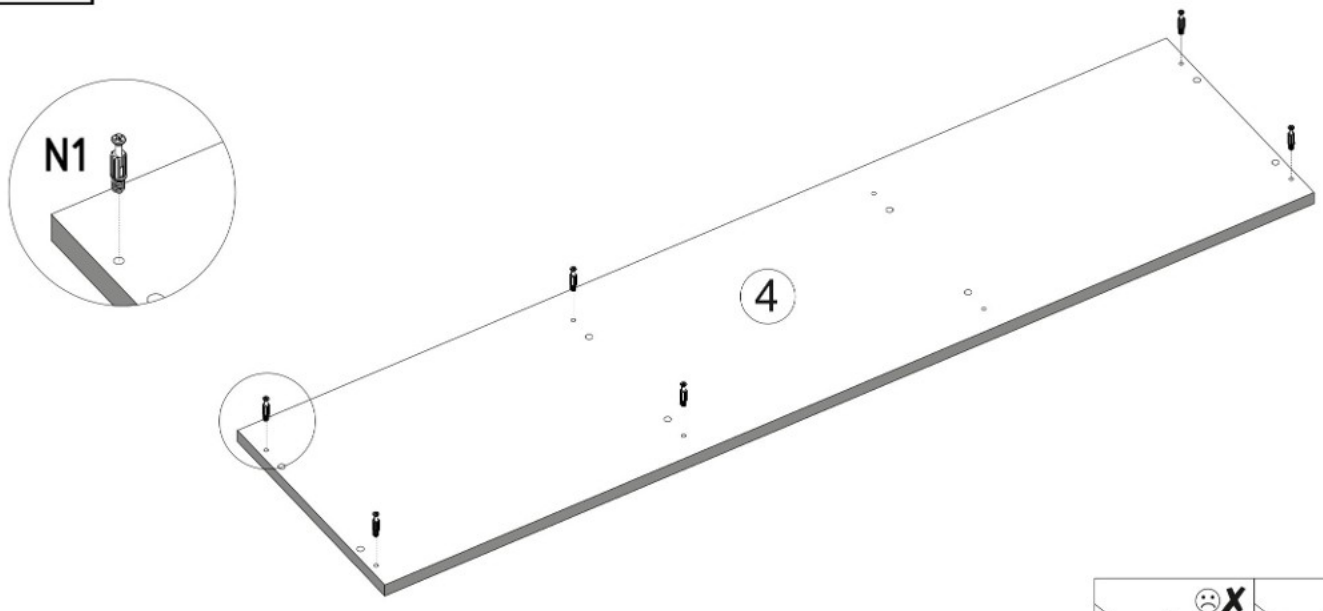

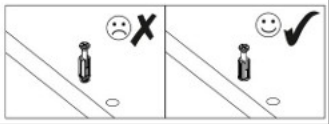

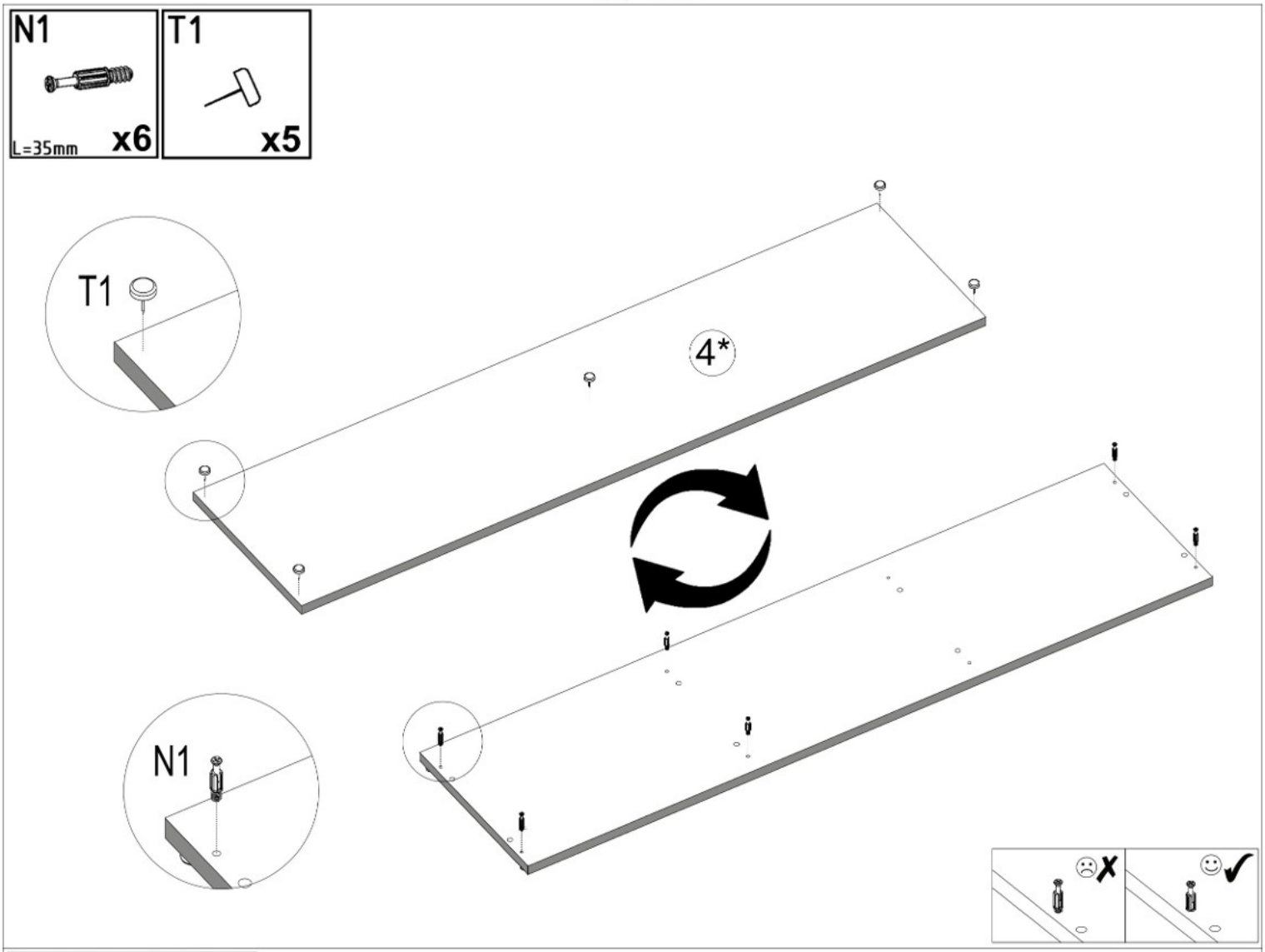
N1
L=35mm
x6
T1
x5
T1
4*
N1

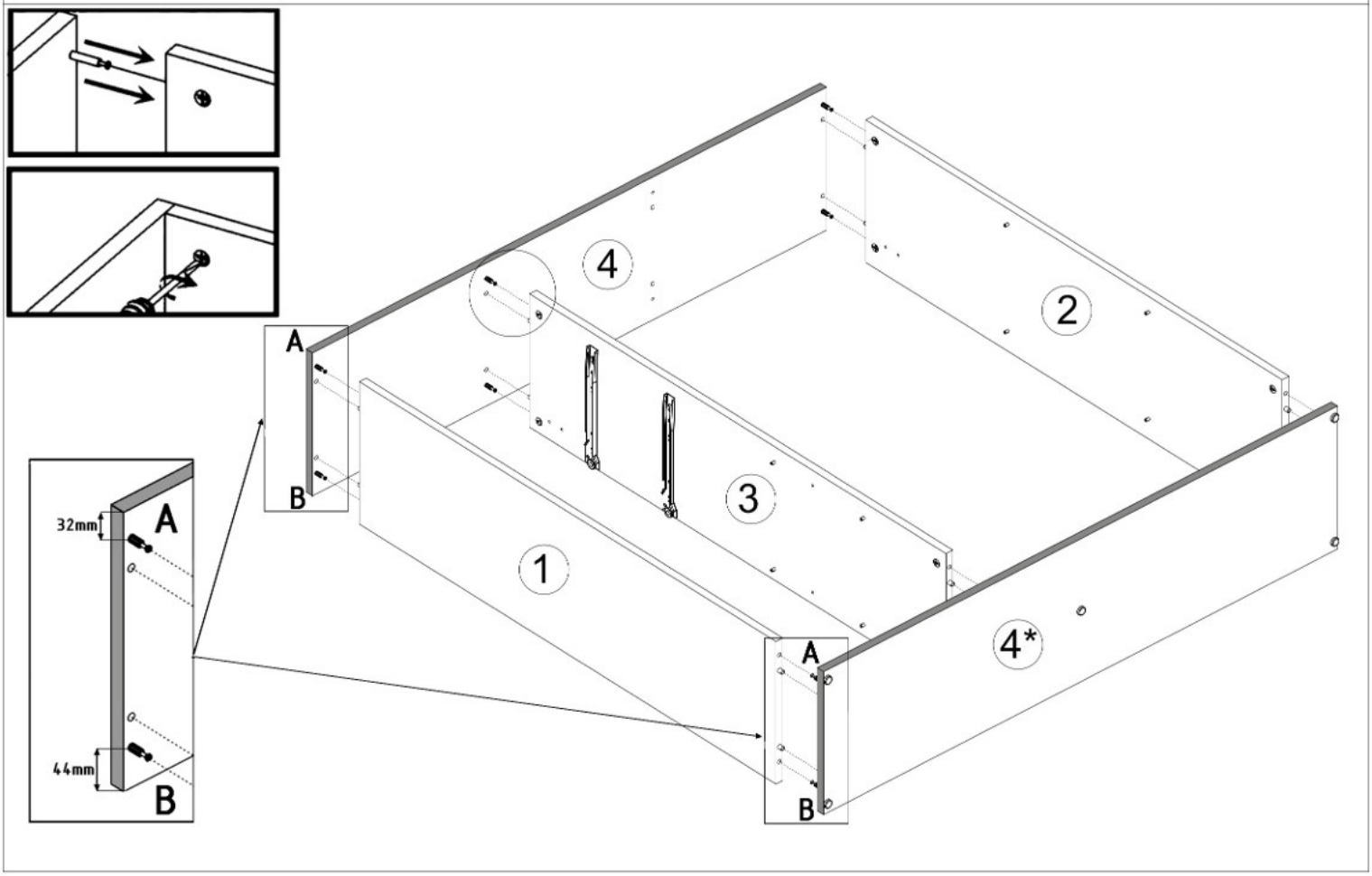
4
2
A
B
3
1
4*
A
B
32mm
A
44mm
B

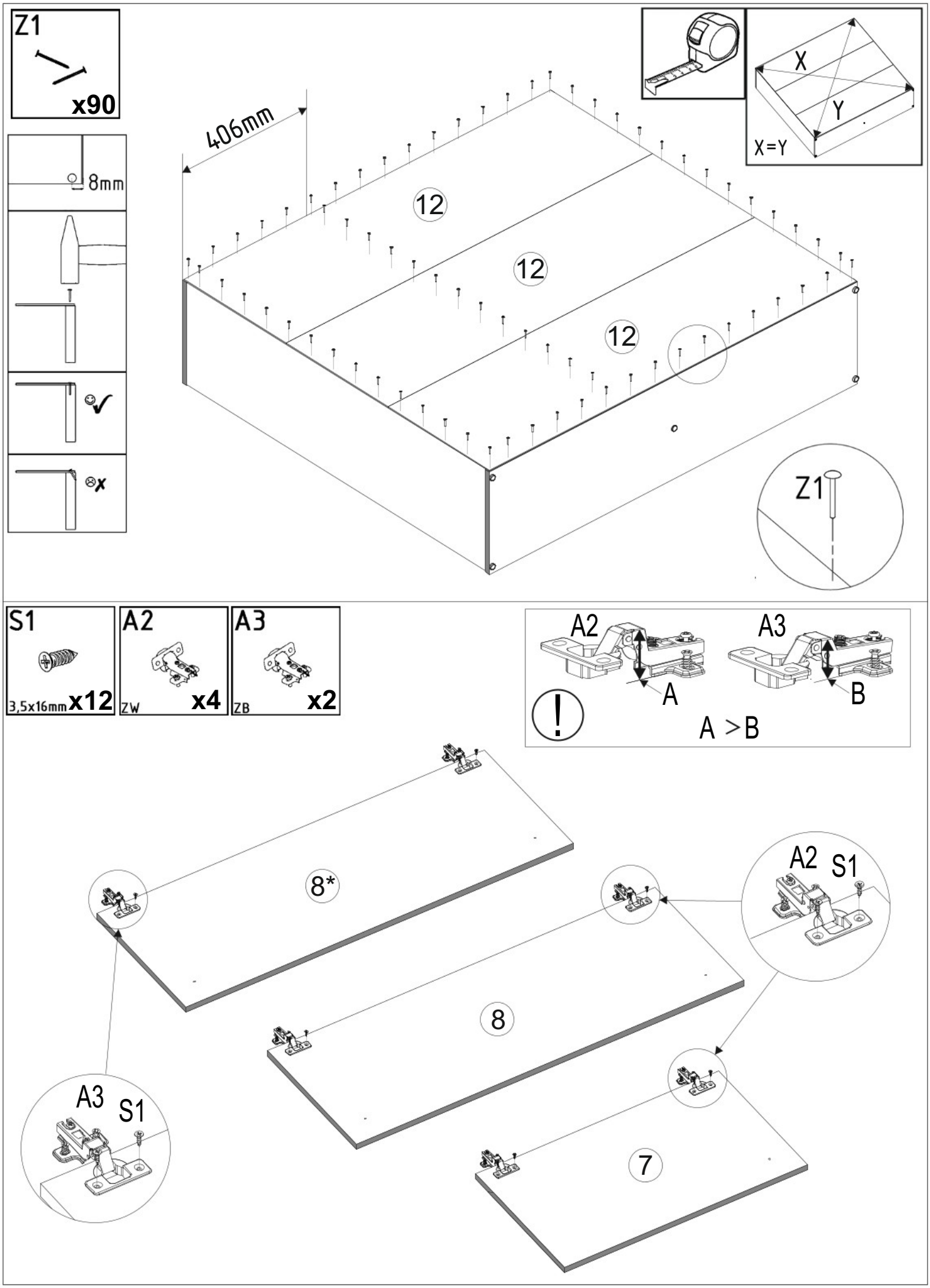
Z1
x90
8mm
406mm
12
12
12
X
Y
X=Y
Z1
S1
3,5x16mm x12
A2
ZW x4
A3
ZB x2
A2
A3
A
B
!
A > B
8*
8
7
A2 S1
A3 S1


V13
x1

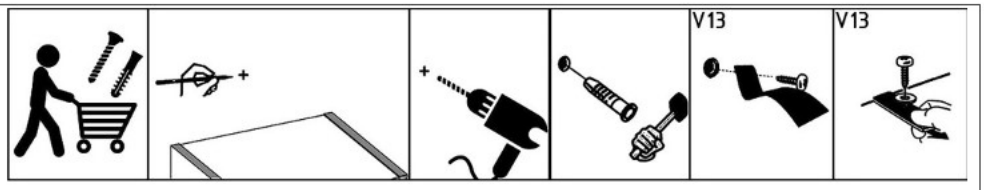
V13
V13

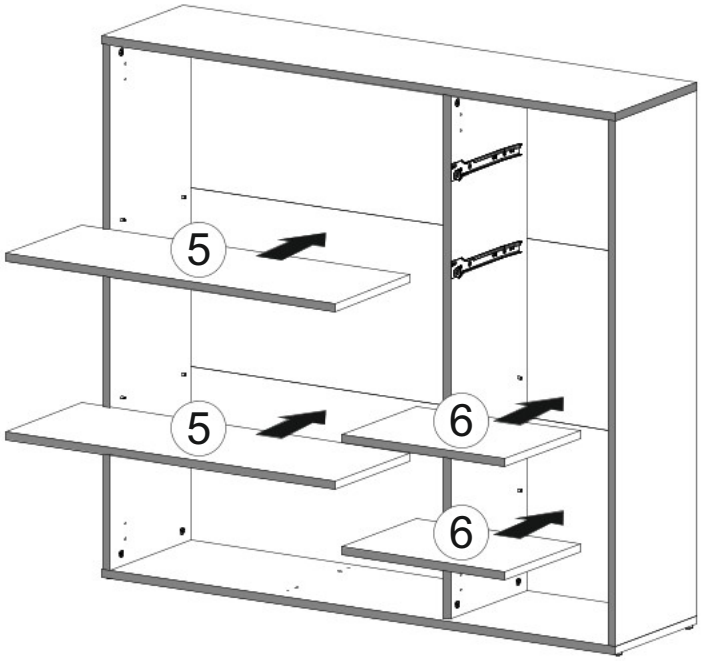
5
5
6
6


U20
x3


S2
4x27mm
x3

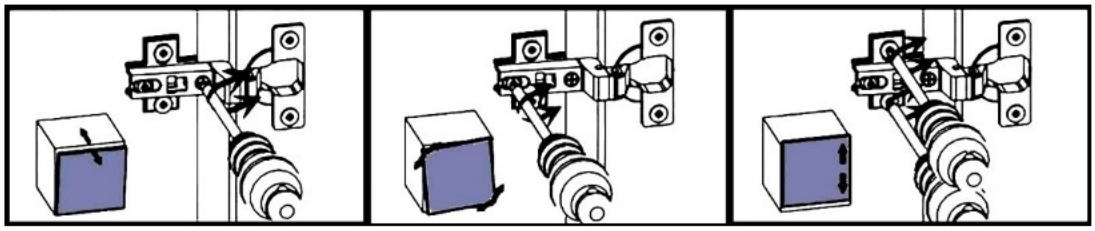


U20
S2

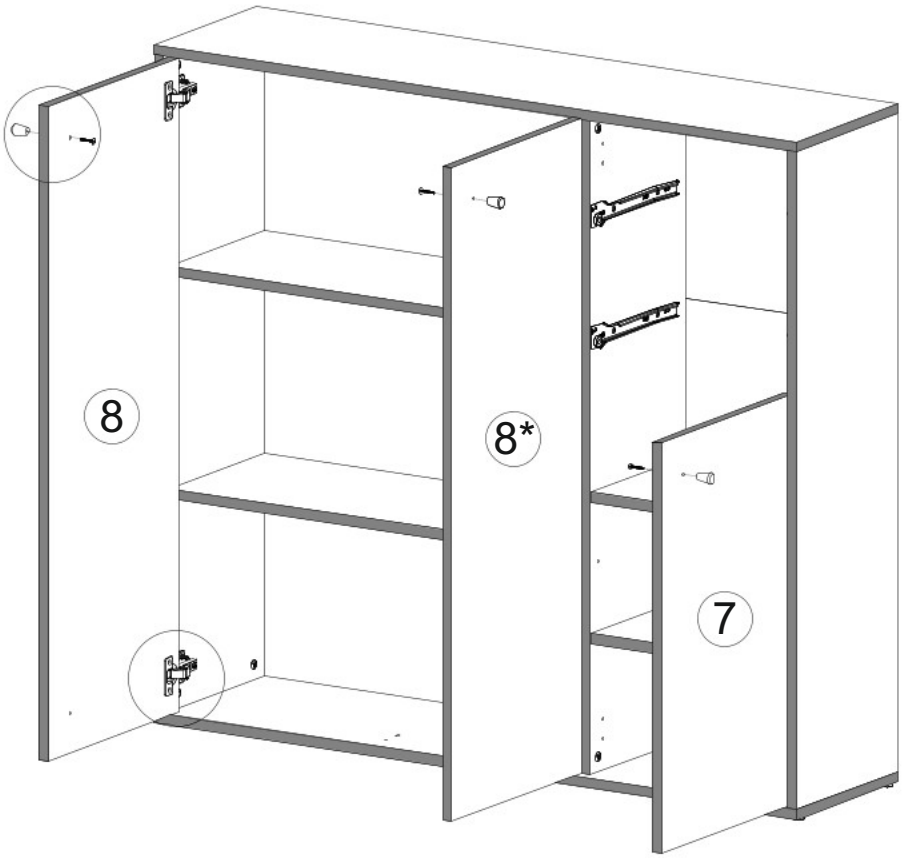
8
8*
7

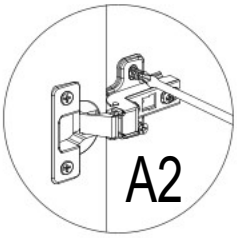
A2

M1

12x15mm x4

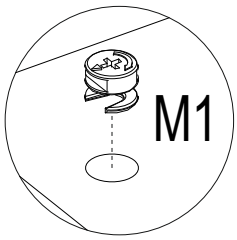

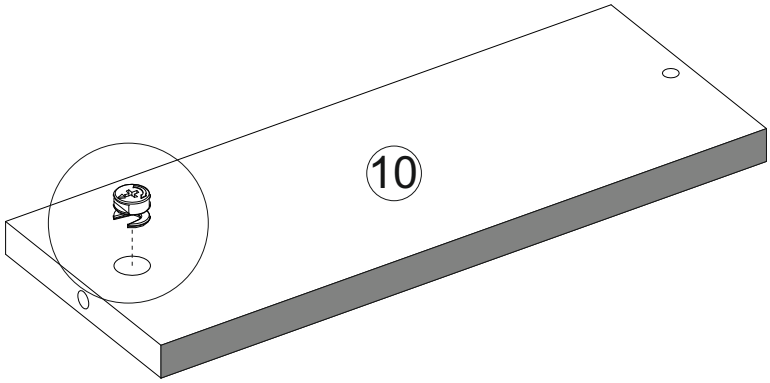

x4

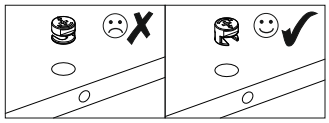

F1

7x50mm x4

F3

Hex 4mm x1



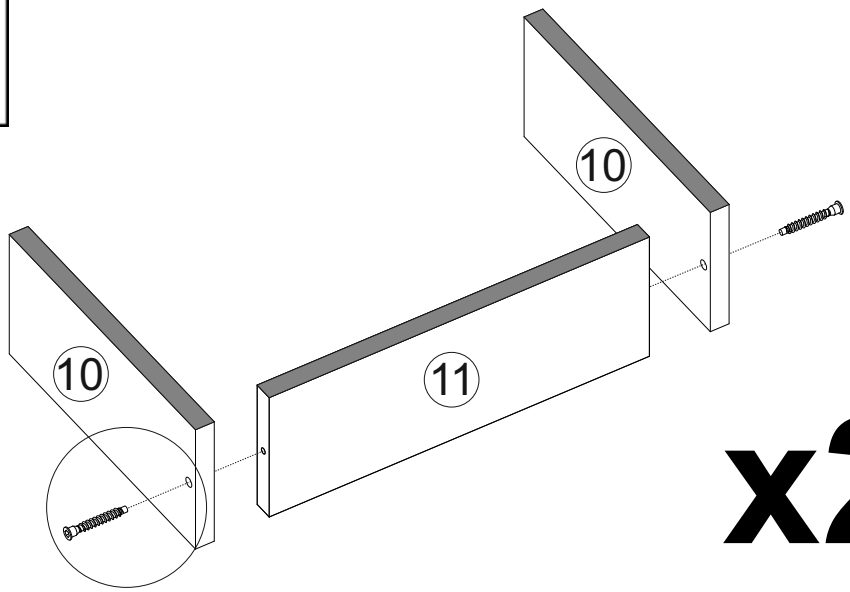

x2

N1

L=35mm x4

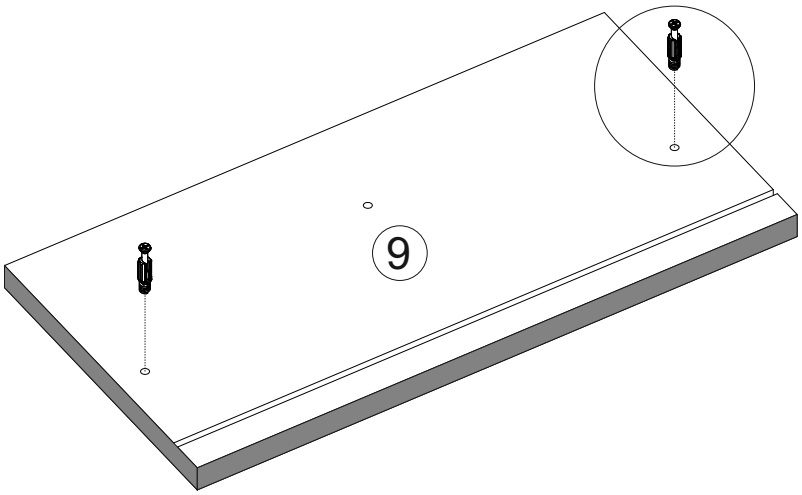

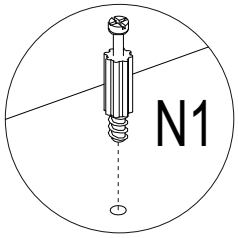

x2

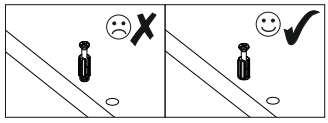

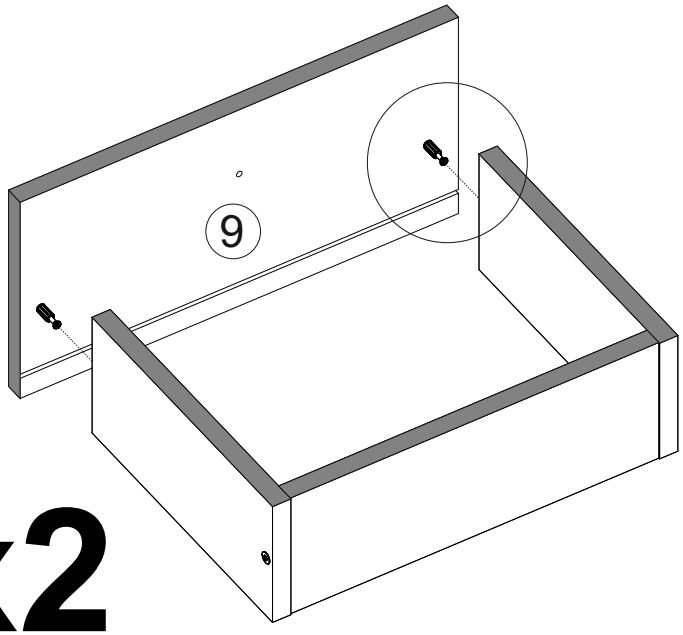

x2

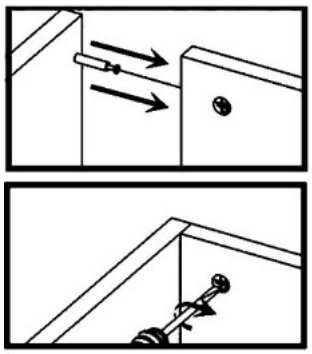

Z1

x10

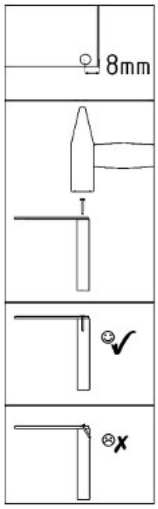

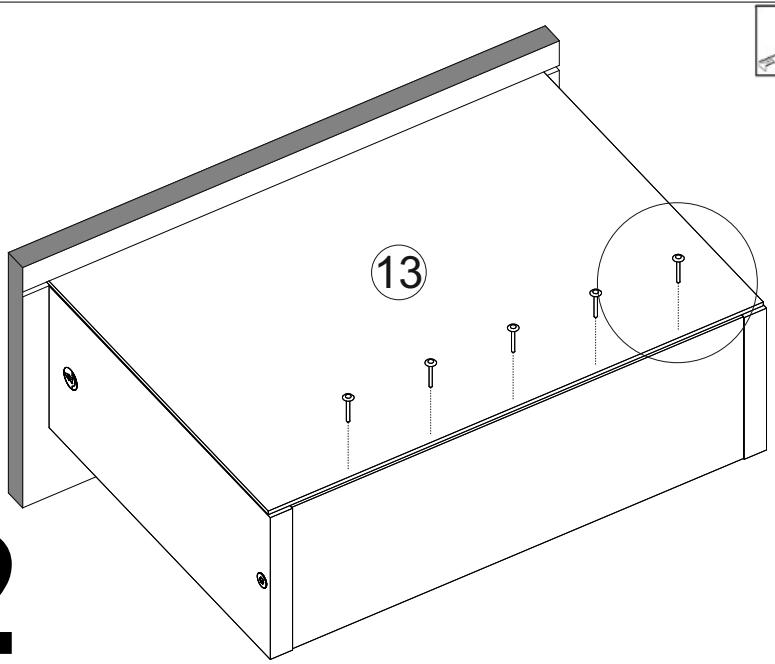

x2

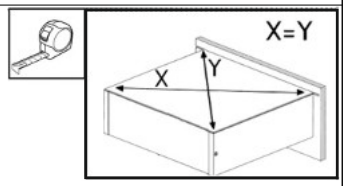

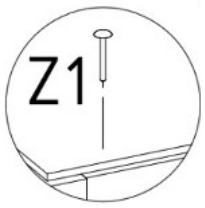

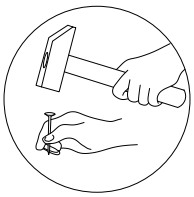

P1



L=250mm x2

S1



3,5x16mm x8

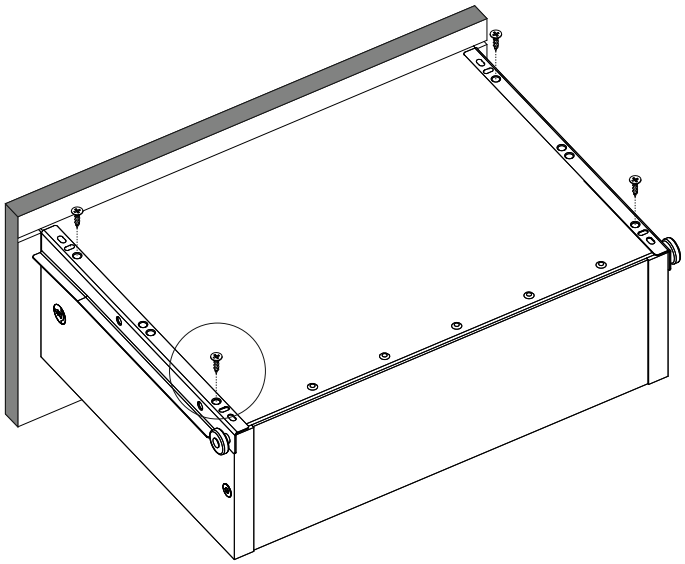

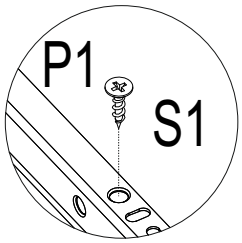

x2

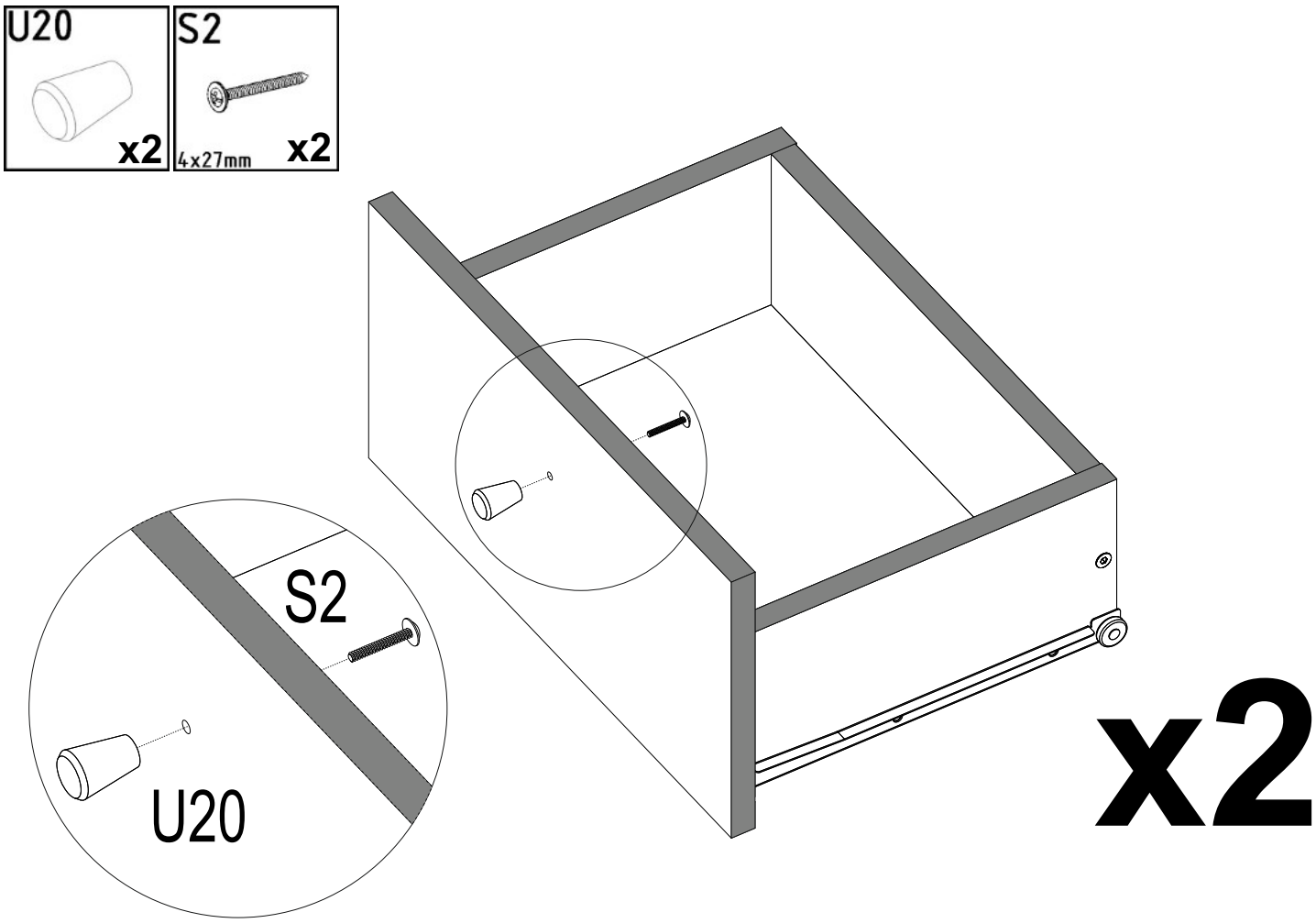
U20
x2
S2
4x27mm
x2
S2
U20
x2

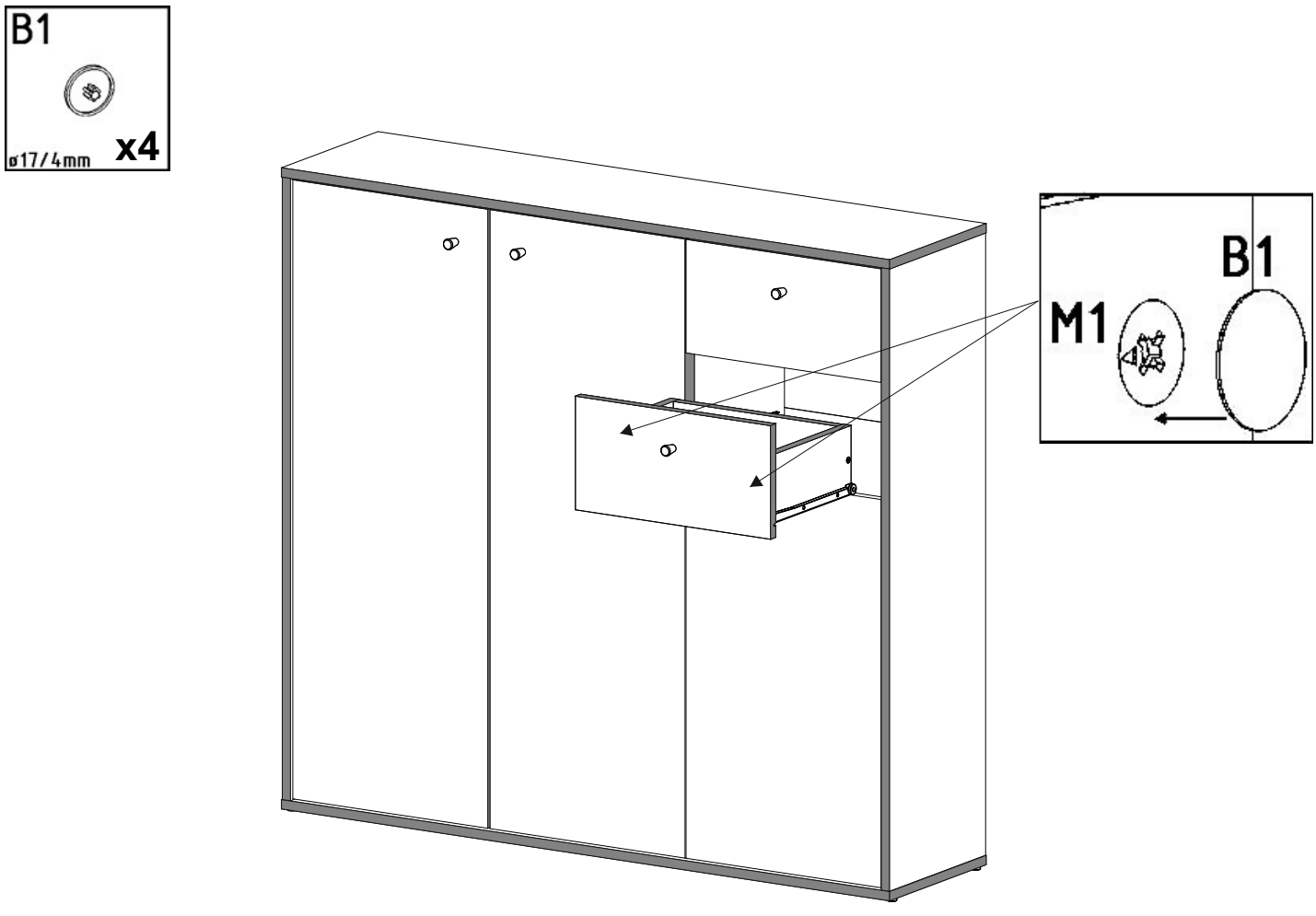
B1
ø17/4mm
x4
B1
M1