INSTRUKCJA MONTAŻU

# Szafa przesuwna 160 cm z lustrem

Kolor: Biały

Kod produktu: OR10157

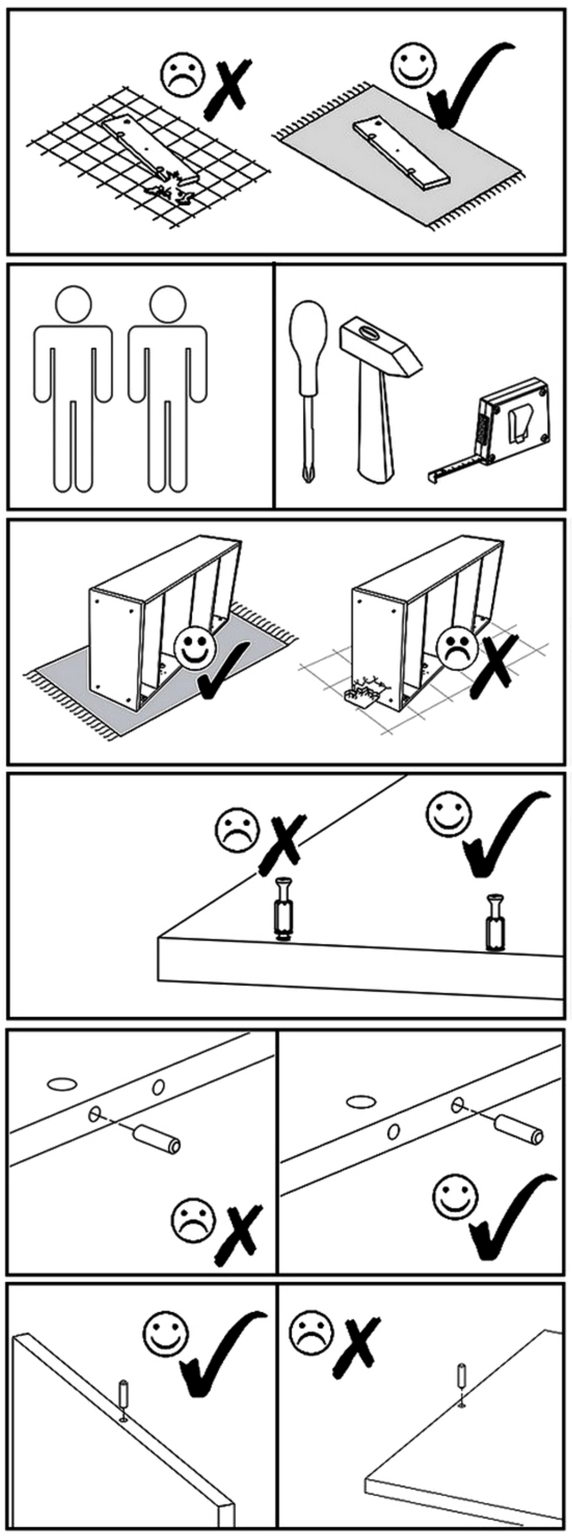

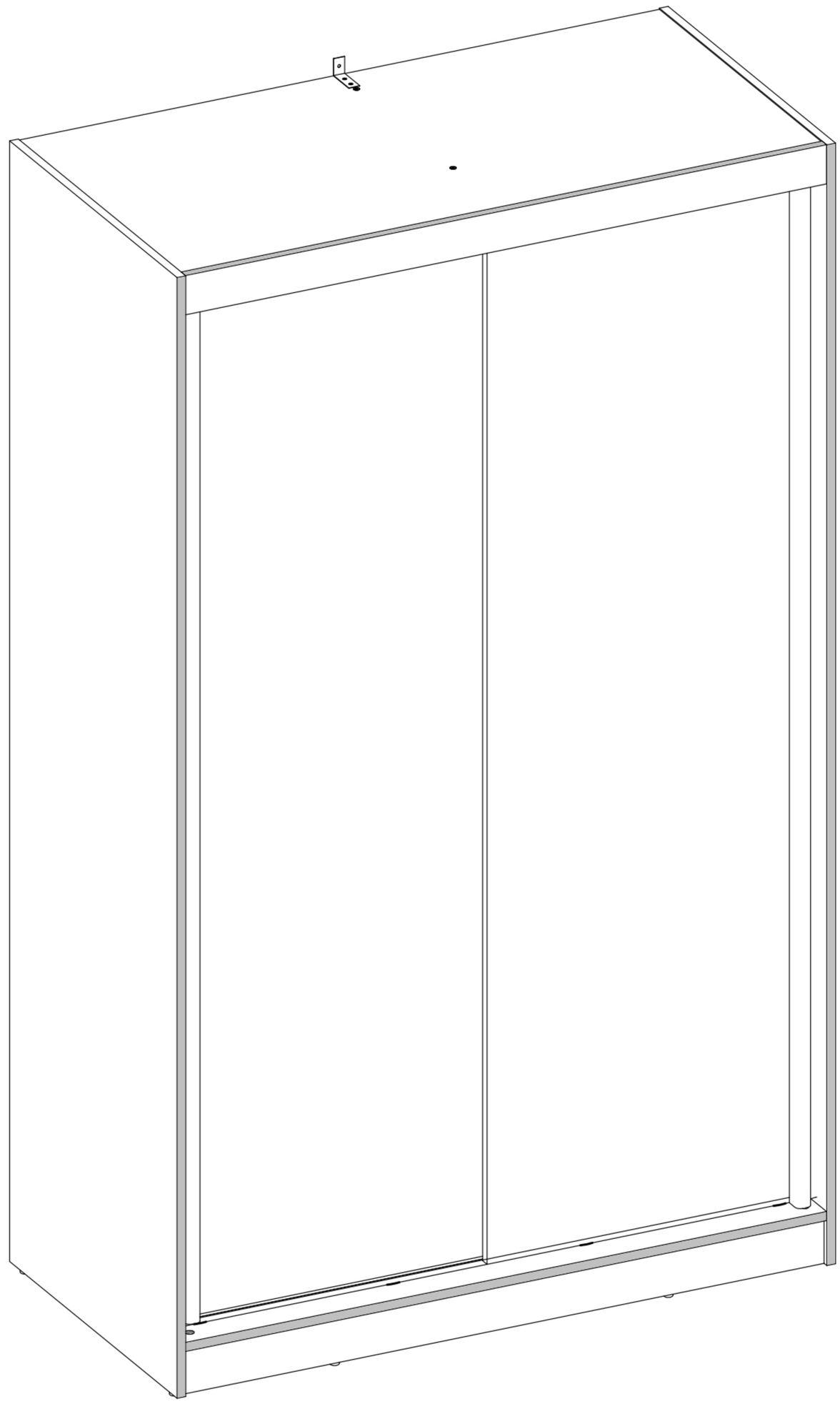

| A7 | A8 | U7 | K12 | K11 | U5 |
|---|---|---|---|---|---|
| 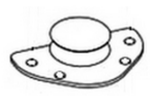 | 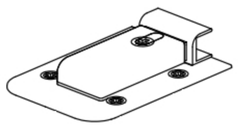 | 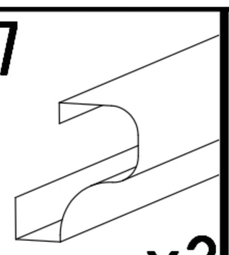 | 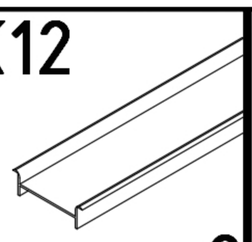 | 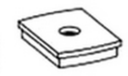 | 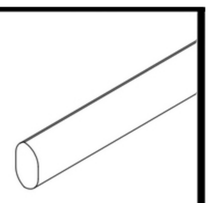 |
| x4 | x4 | L=1862mm x2 | L=1564mm x2 | x8 | L=765mm x1 |

| K9 | K4 | L2 | S6 | K1 | V7 | T4 |
|---|---|---|---|---|---|---|
| 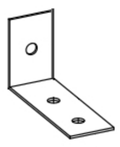 |  |  |  |  | 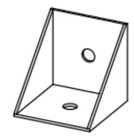 | 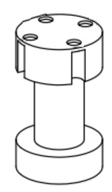 |
| x1 | x16 | L=768mm x4 | 2,5x20 x16 | x1 | x2 | x1 |

| N1 | M1 | M2 | S1 | E1 | E3 | K10 |
|---|---|---|---|---|---|---|
| 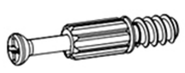 | 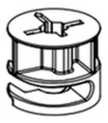 | 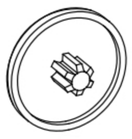 |  |  | 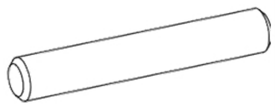 |  |
| L=35mm x24 | 12x15mm x28 | x20 ø16mm B,S-A x10 | 3,5x16mm x20 | 8x30mm x24 | 8x50mm x2 | x2 |

| Z1 | F1 | K7 | F3 | S10 | N4 | T1 |
|---|---|---|---|---|---|---|
|  | 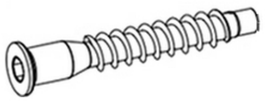 | 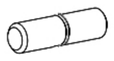 | 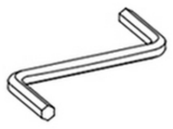 | 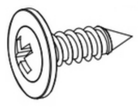 | 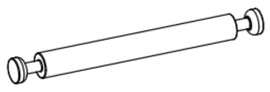 |  |
| x150 | 7x50mm x4 | 5x16mm x8 | x1 | 4x15 mm x24 | L=62mm x2 | x6 |

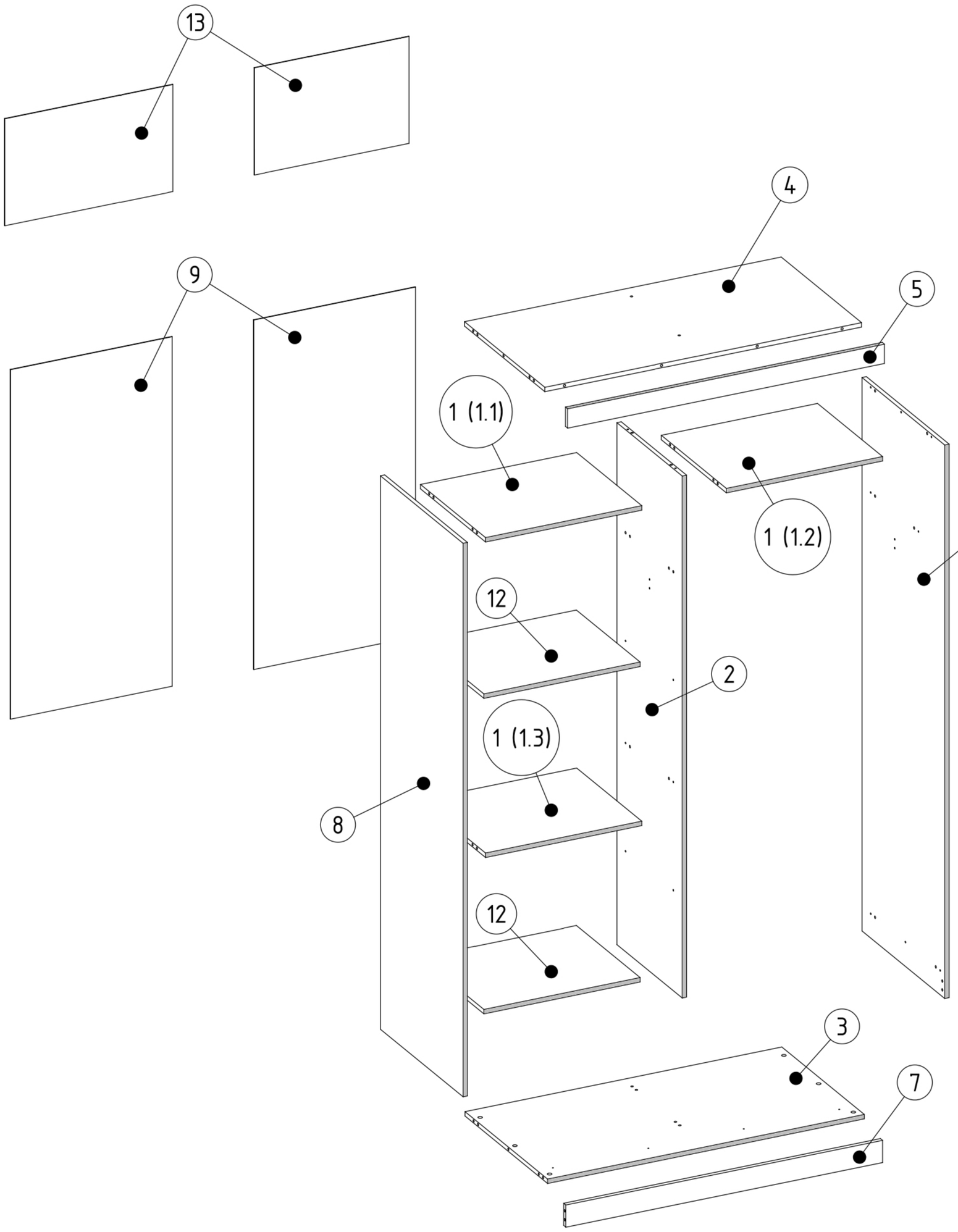


| | | |
|---|---|---|
| 1 | x | 3 |
| 2 | x | 1 |
| 3 | x | 1 |
| 4 | x | 1 |
| 5 | x | 1 |
| 6 | x | 1 |

| | | |
|---|---|---|
| 7 | x | 1 |
| 8 | x | 1 |
| 9 | x | 2 |
| 10 | x | 1 |
| 11 | x | 1 |
| 12 | x | 2 |
| 13 | x | 2 |

| M1 | E1 | E3 |
|---|---|---|
| 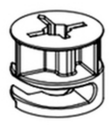 | 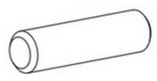 | 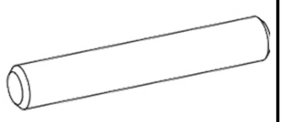 |
| 12x15mm x4 | 8x30mm x2 | 8x50mm x2 |

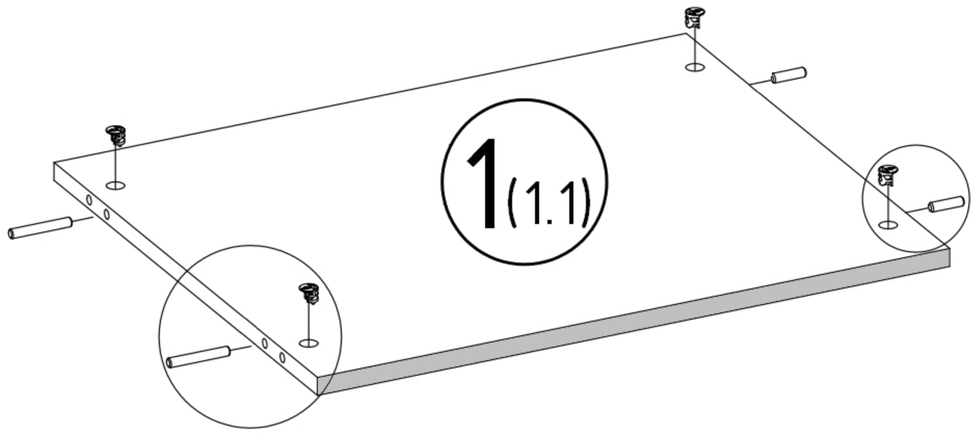





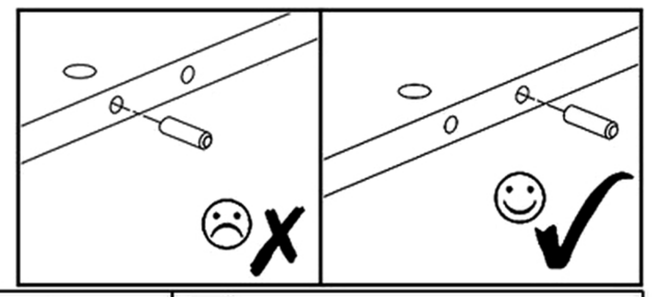

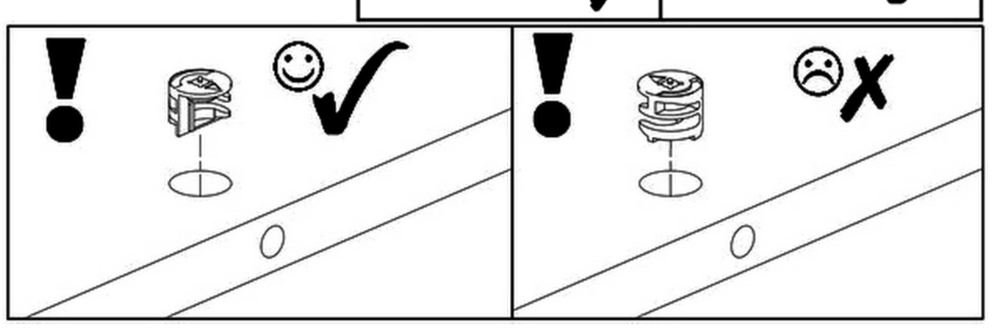

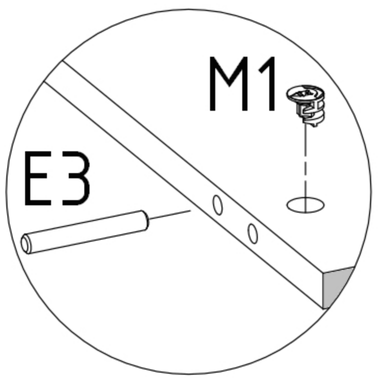


| M1 | E1 |
|---|---|
| 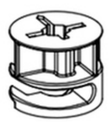 | 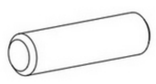 |
| 12x15mm x4 | 8x30mm x2 |

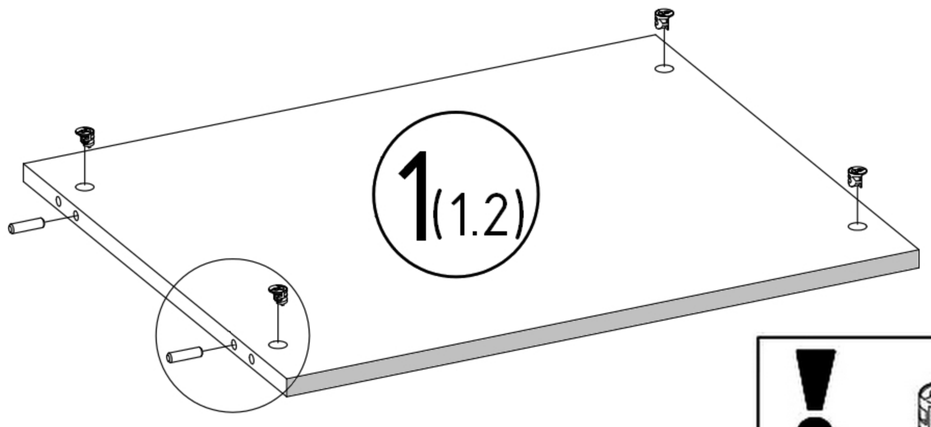


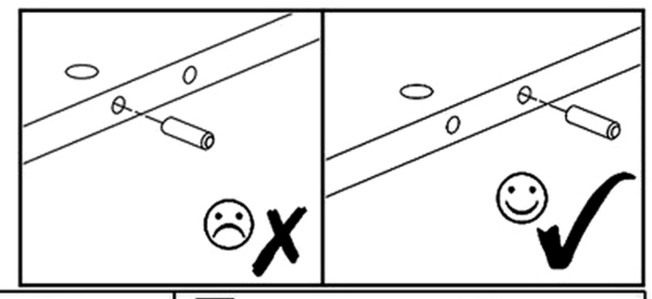

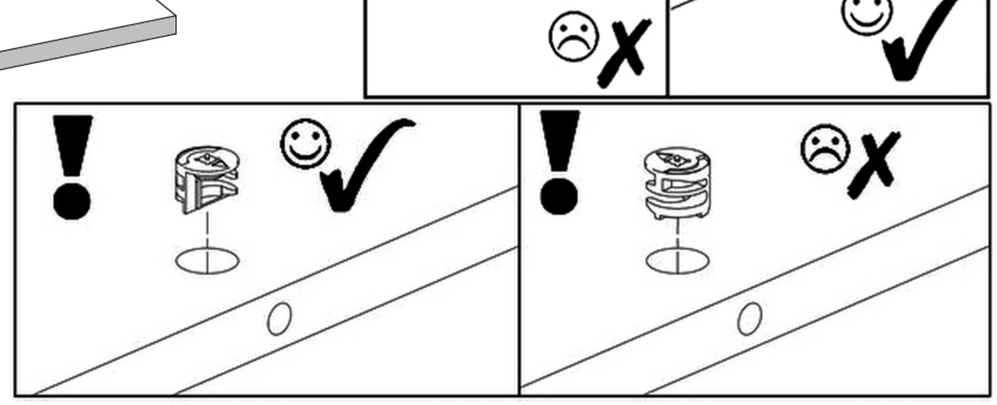

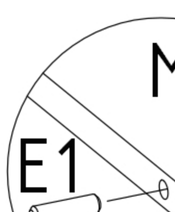


| M1 | E1 |
|---|---|
| 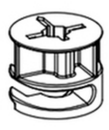 | 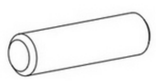 |
| 12x15mm x4 | 8x30mm x4 |

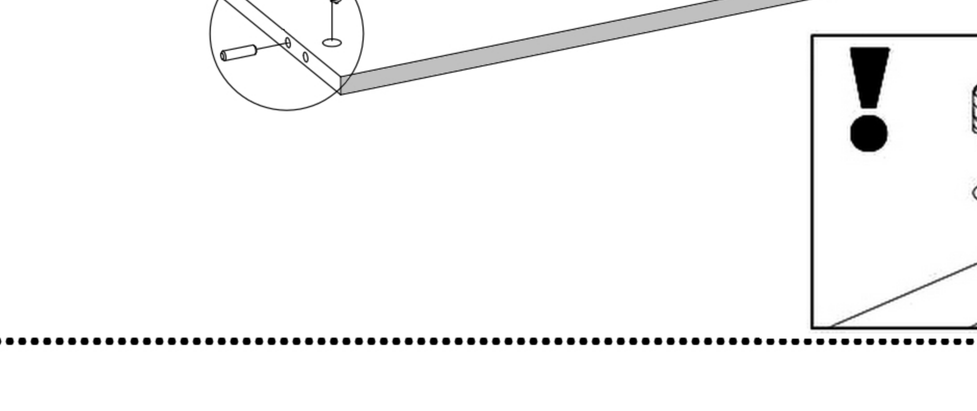

| N1 | K7 | E1 |
|---|---|---|
| 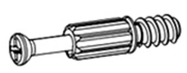 | 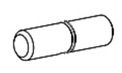 | 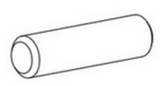 |
| L=35mm x2 | 5x16mm x4 | 8x30mm x4 |

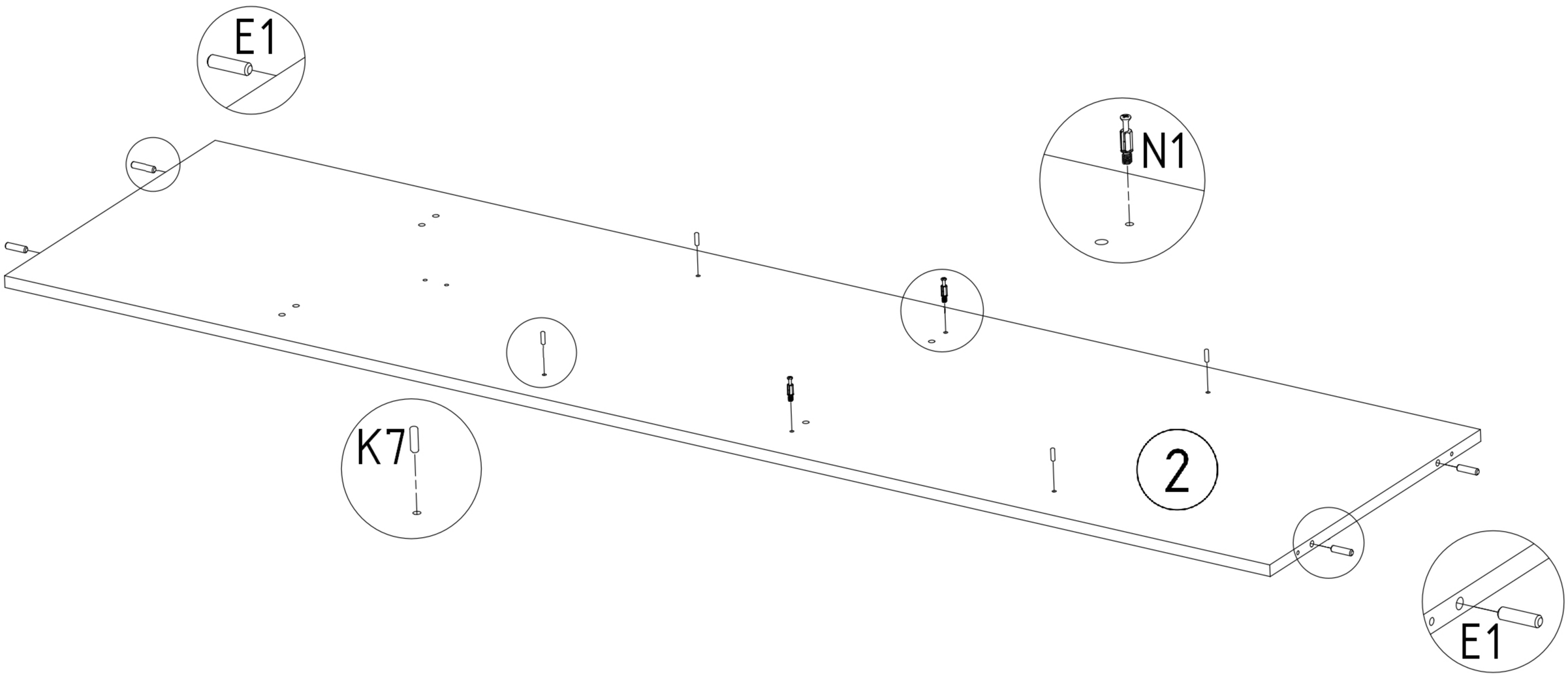


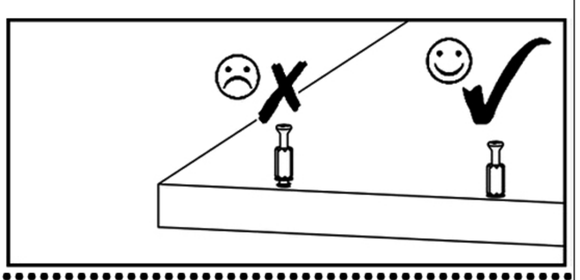

| S1 | K10 |
|---|---|
|  |  |
| 3,5x16mm x1 | x1 |

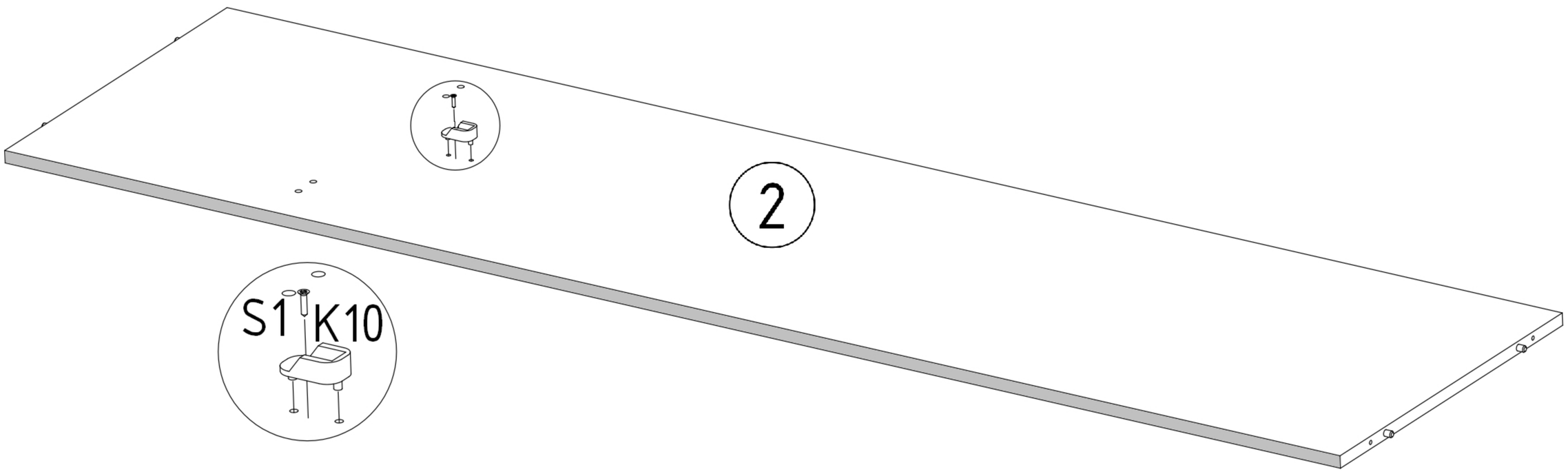

N4 x2

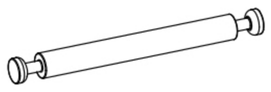

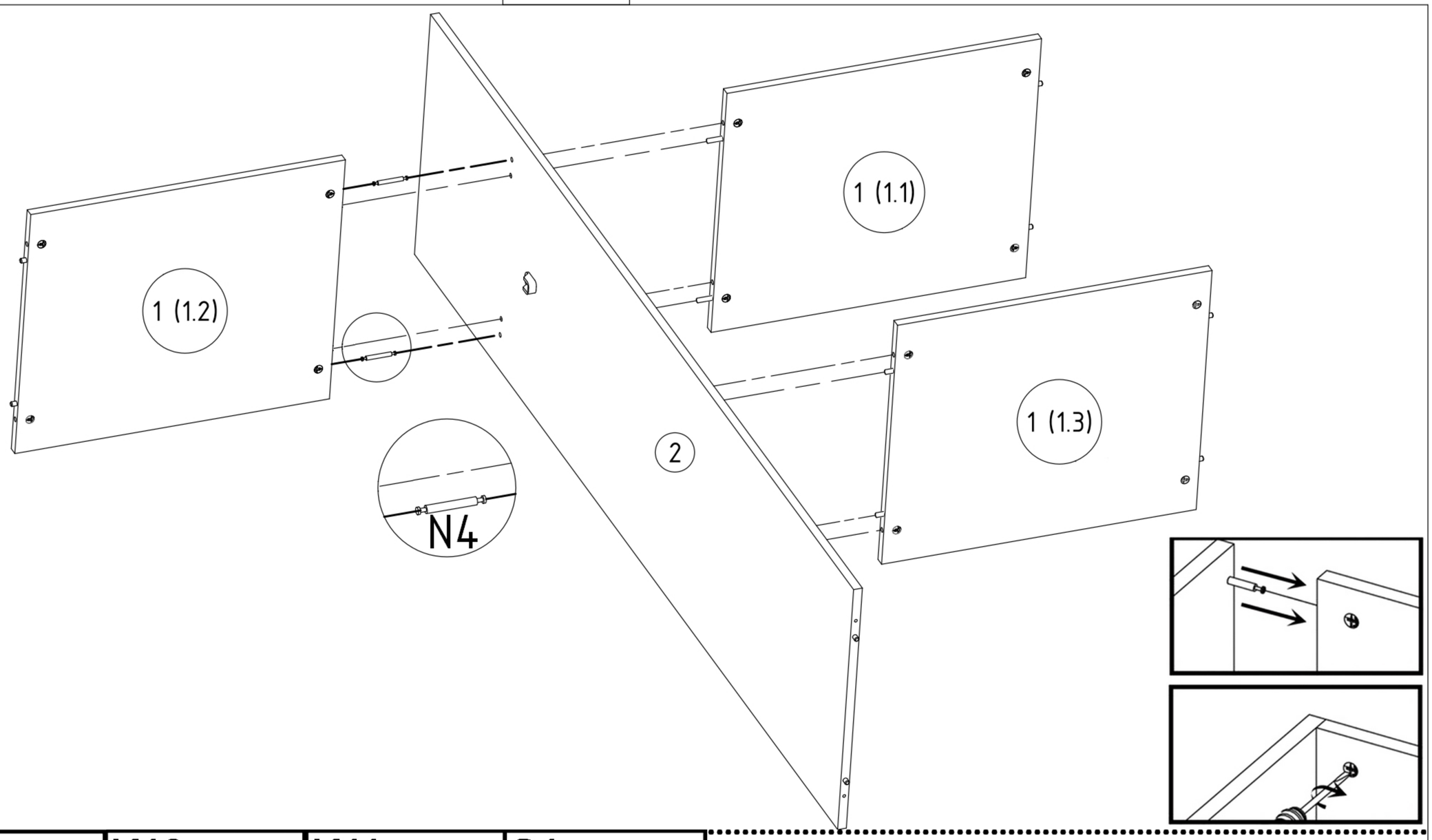




M1 12x15mm x6

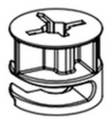

E1 8x30mm x4

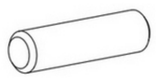

K12 x1

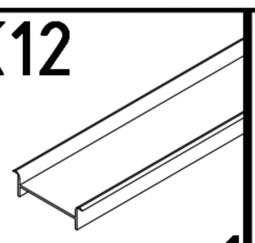

K11 x4

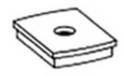

S1 3,5x16mm x4



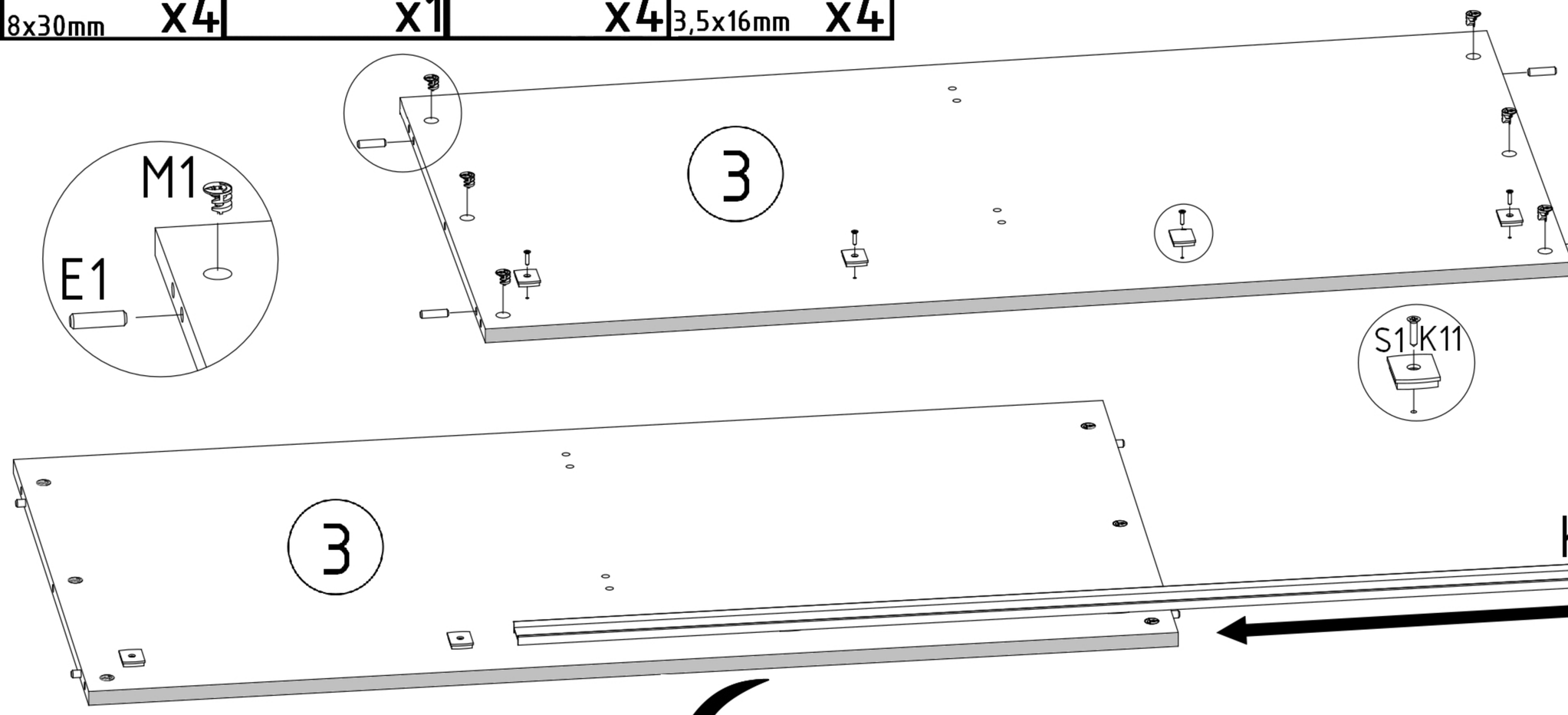


S1 3,5x16mm x4



T4 x1

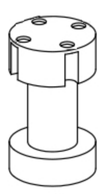

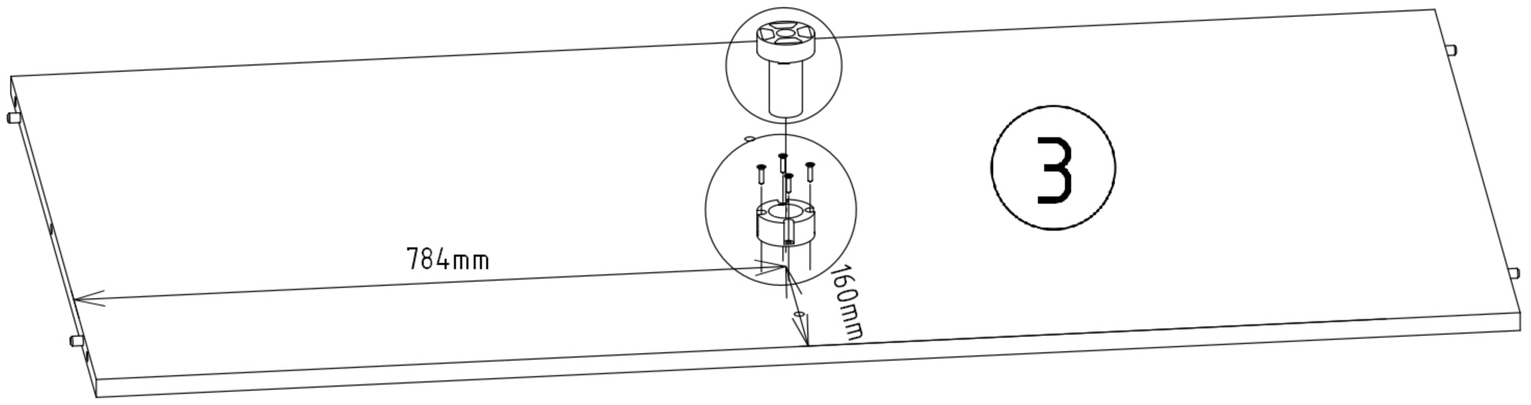


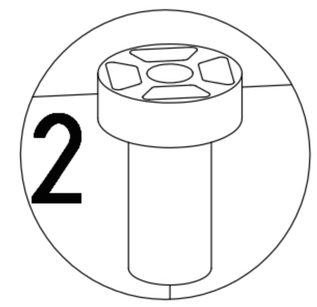


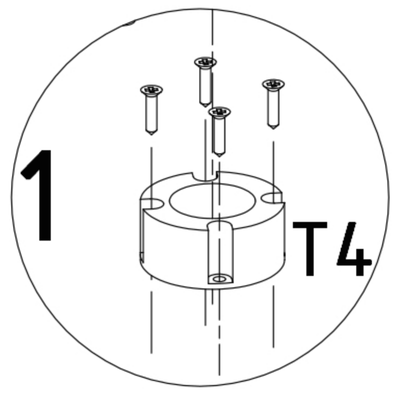


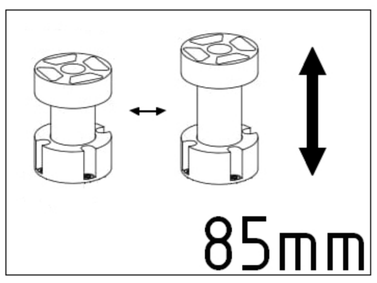

| F1 | F3 |
|---|---|
| 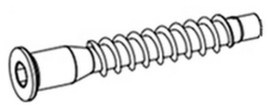 7x50mm x2 | 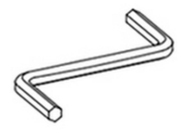 x1 |

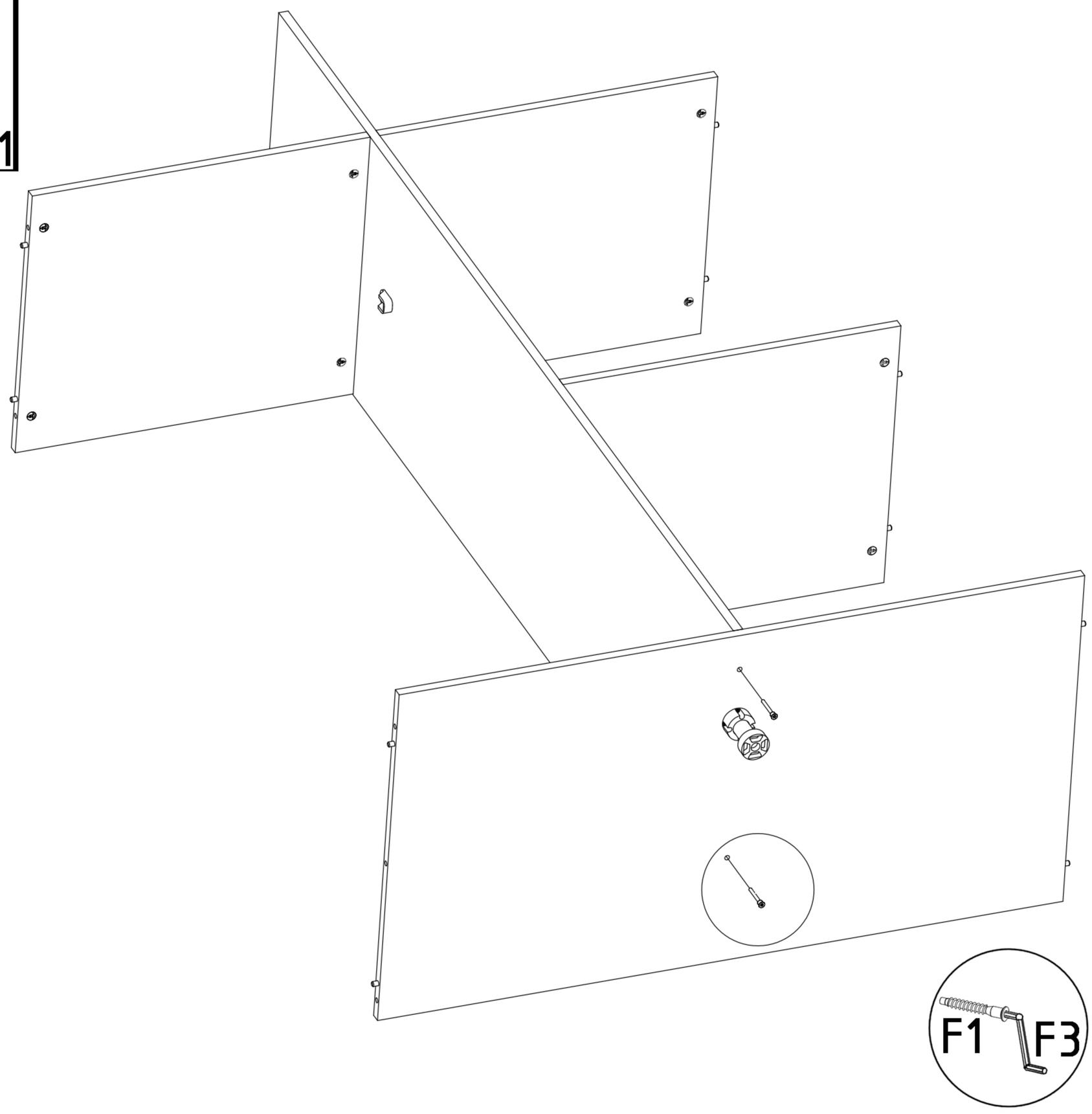


| M1 | E1 | K12 | K11 | S1 |
|---|---|---|---|---|
| 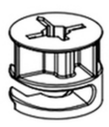 12x15mm x10 | 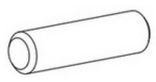 8x30mm x4 | 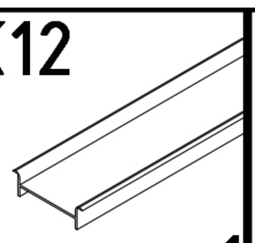 x1 | 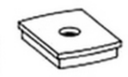 x4 |  3,5x16mm x4 |

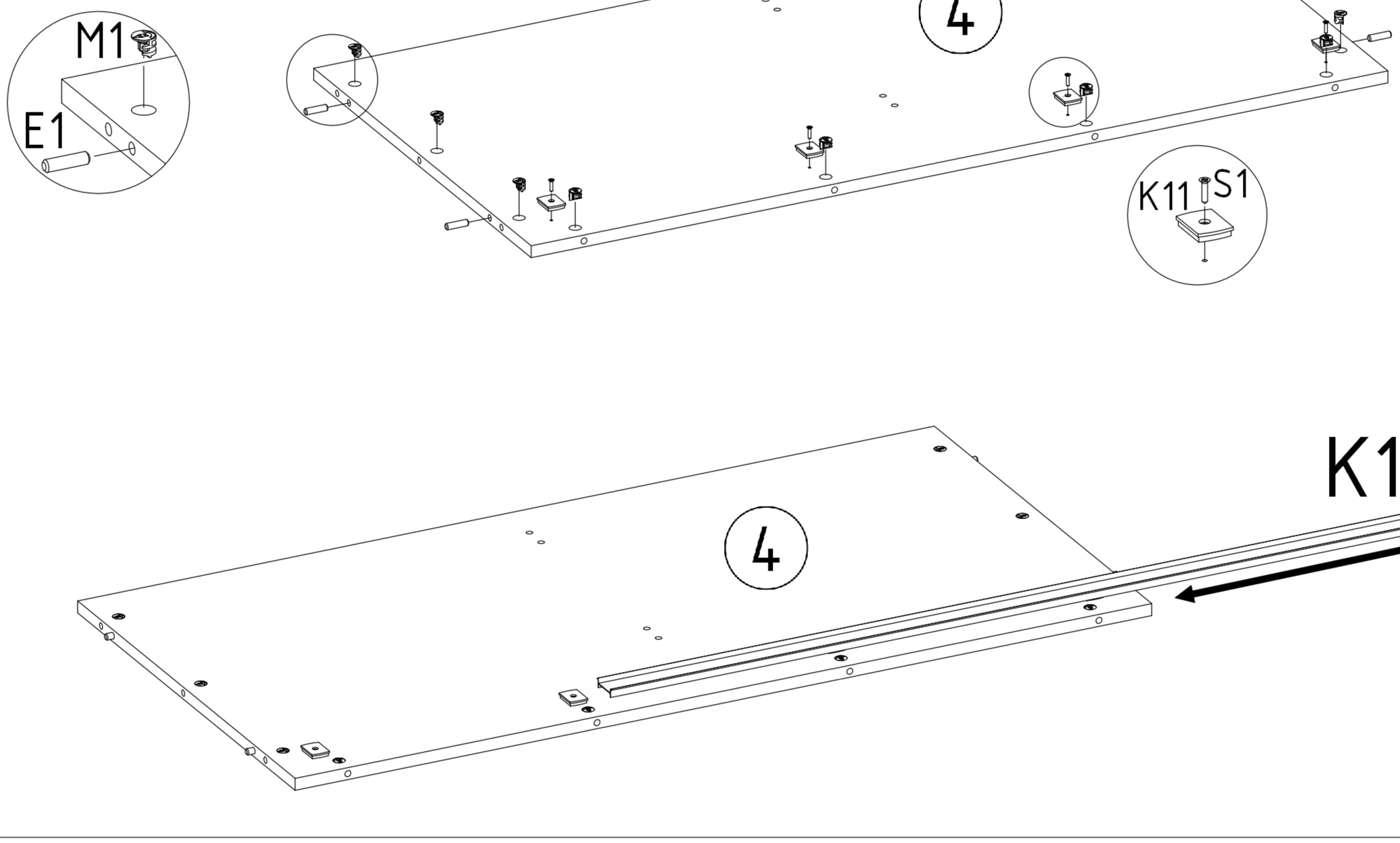

**N1**

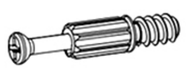

L=35mm x4

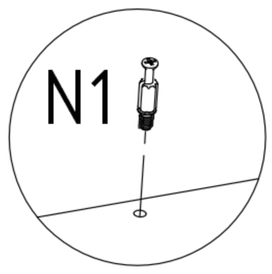


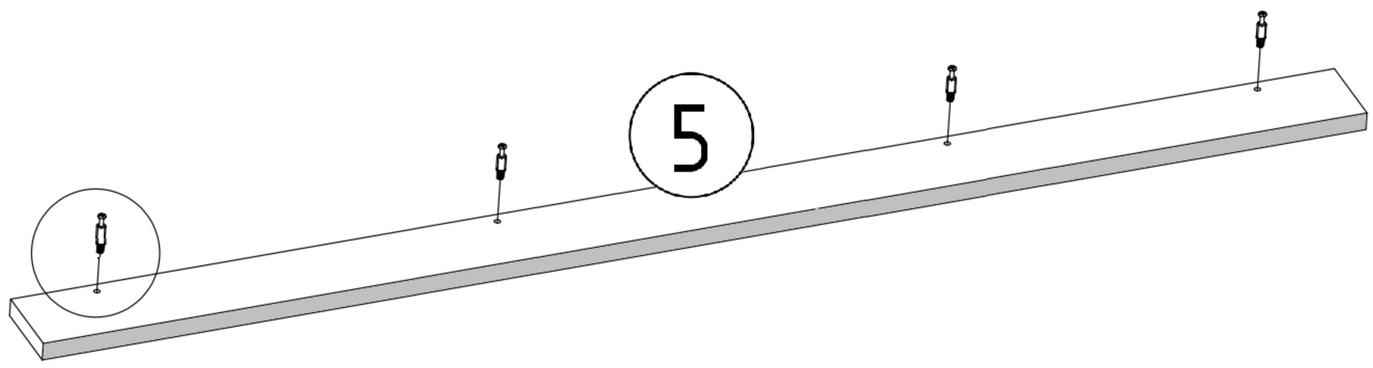


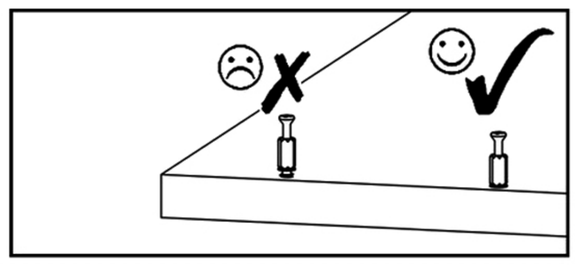

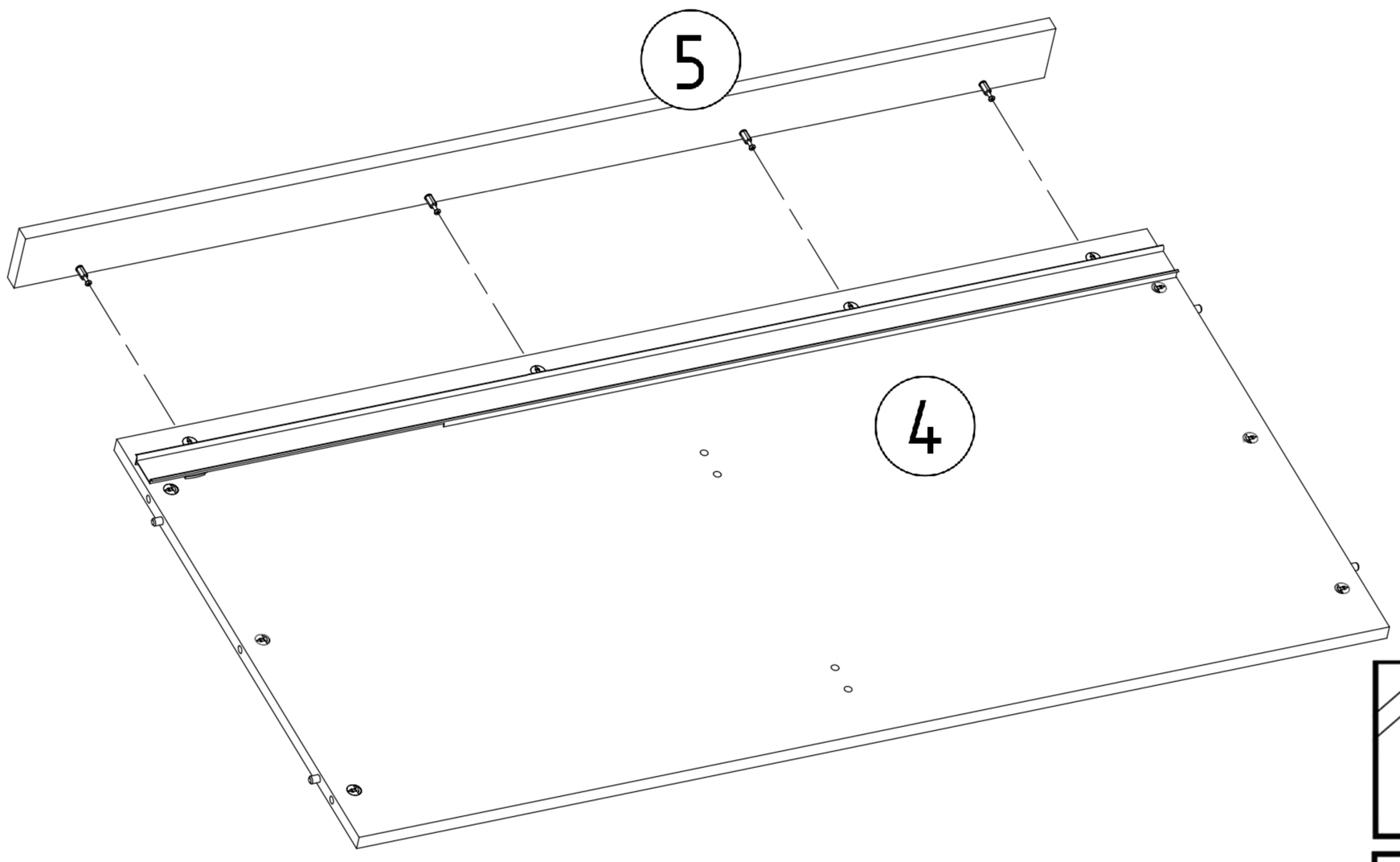


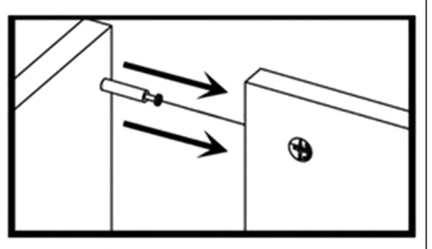

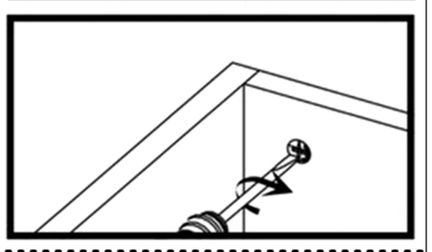

**E1**

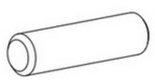

8x30mm x4

**T1**



x2

**K1**




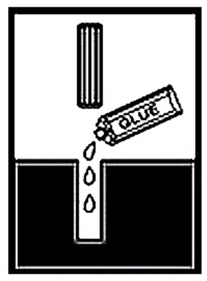


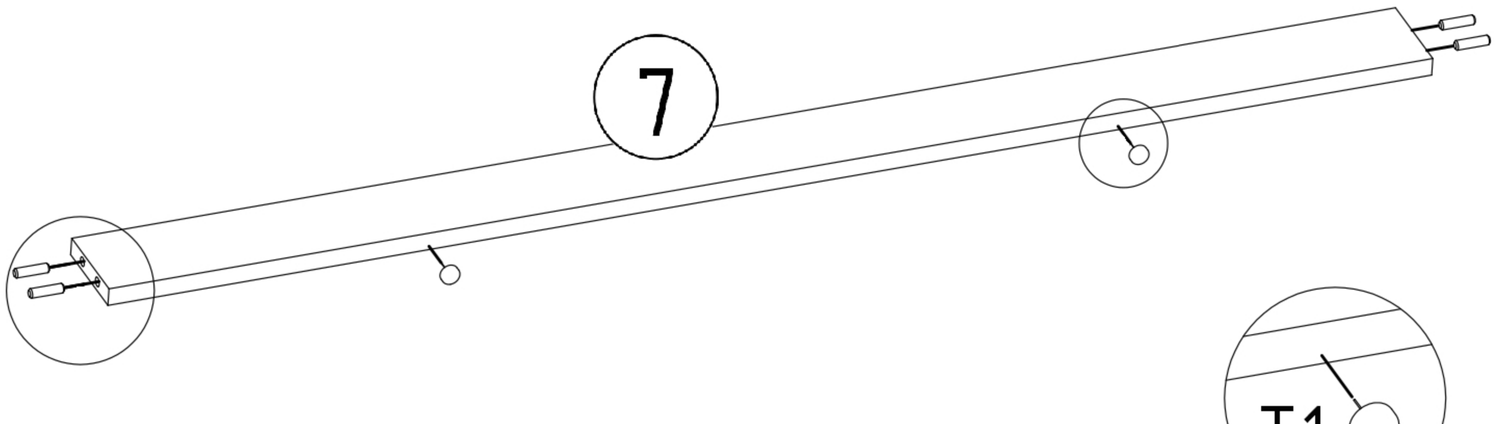


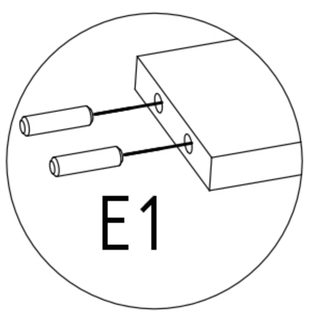

F1

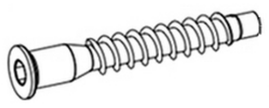

7x50mm x2

F3

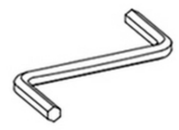

x1

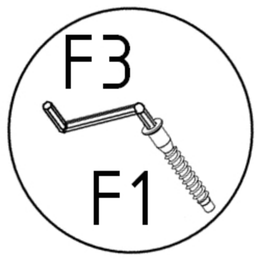


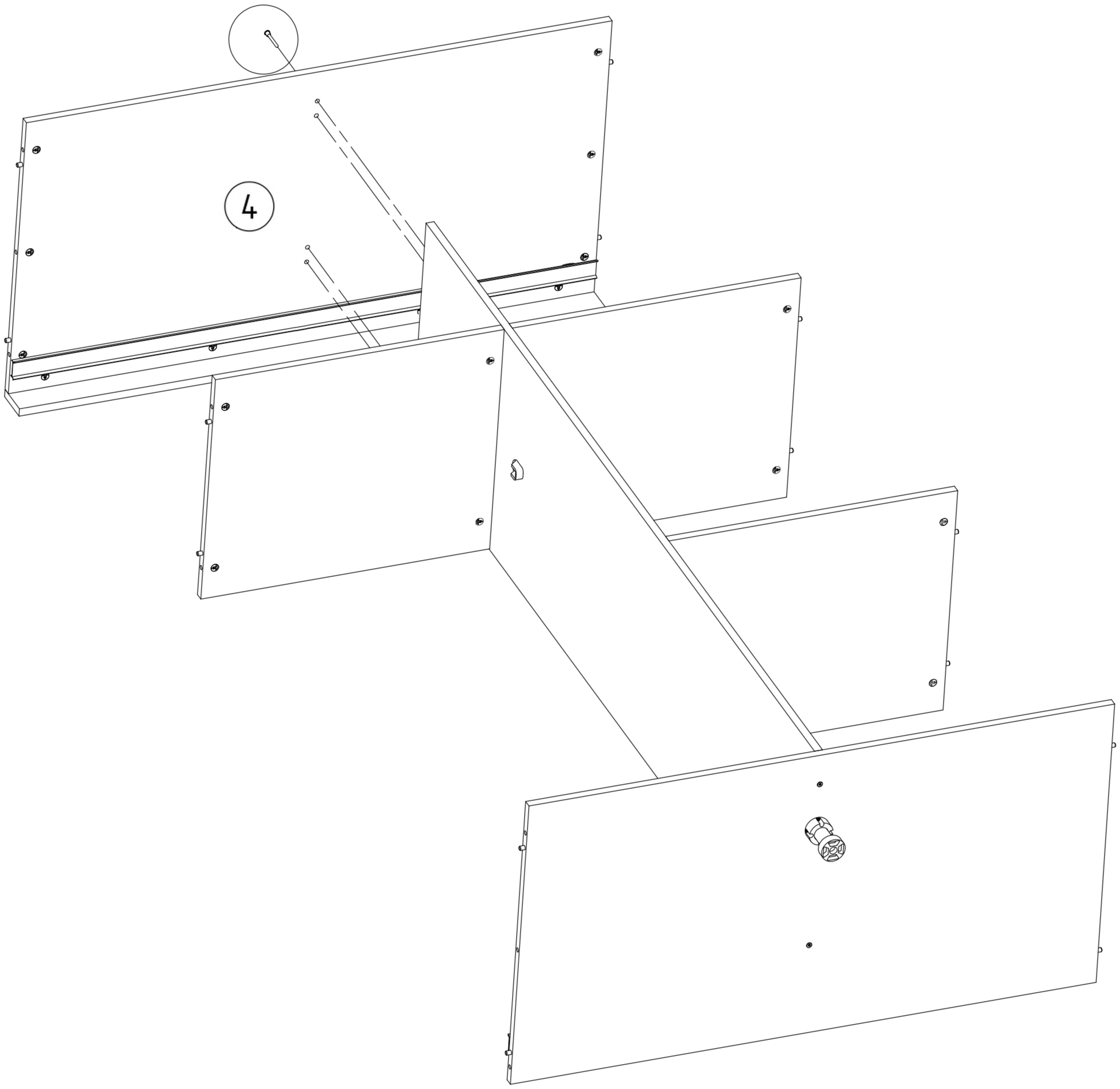

| N1 | T1 | S1 | K10 |
|---|---|---|---|
| 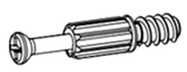 |  |  |  |
| L=35mm x8 | x2 | 3,5x16mm x1 | x1 |

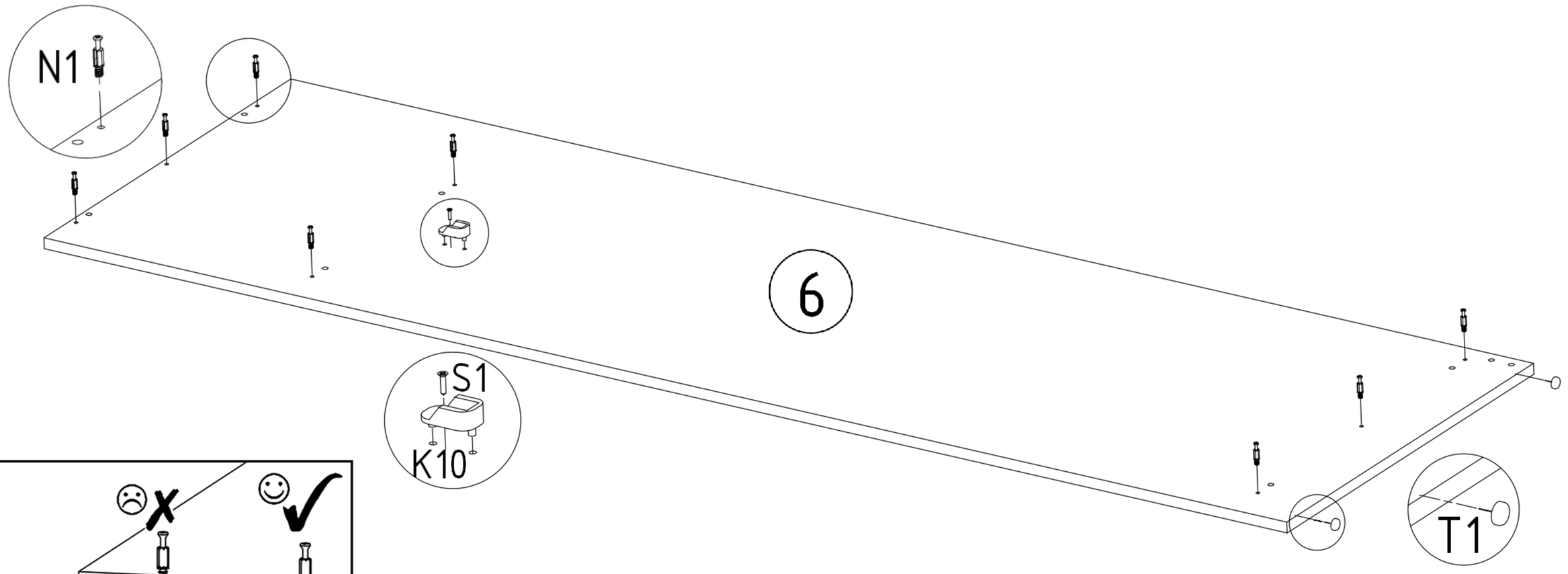




| K1 |
|---|
|  |



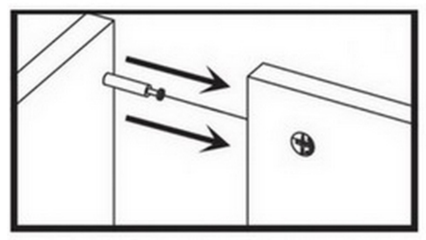

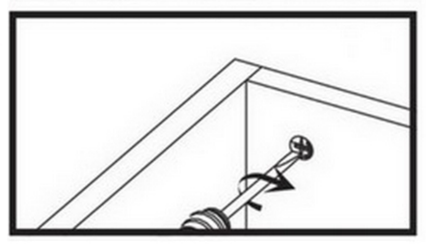

N1

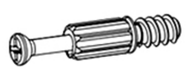

L=35mm x10

K7

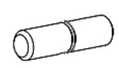

5x16mm x4

T1



x2

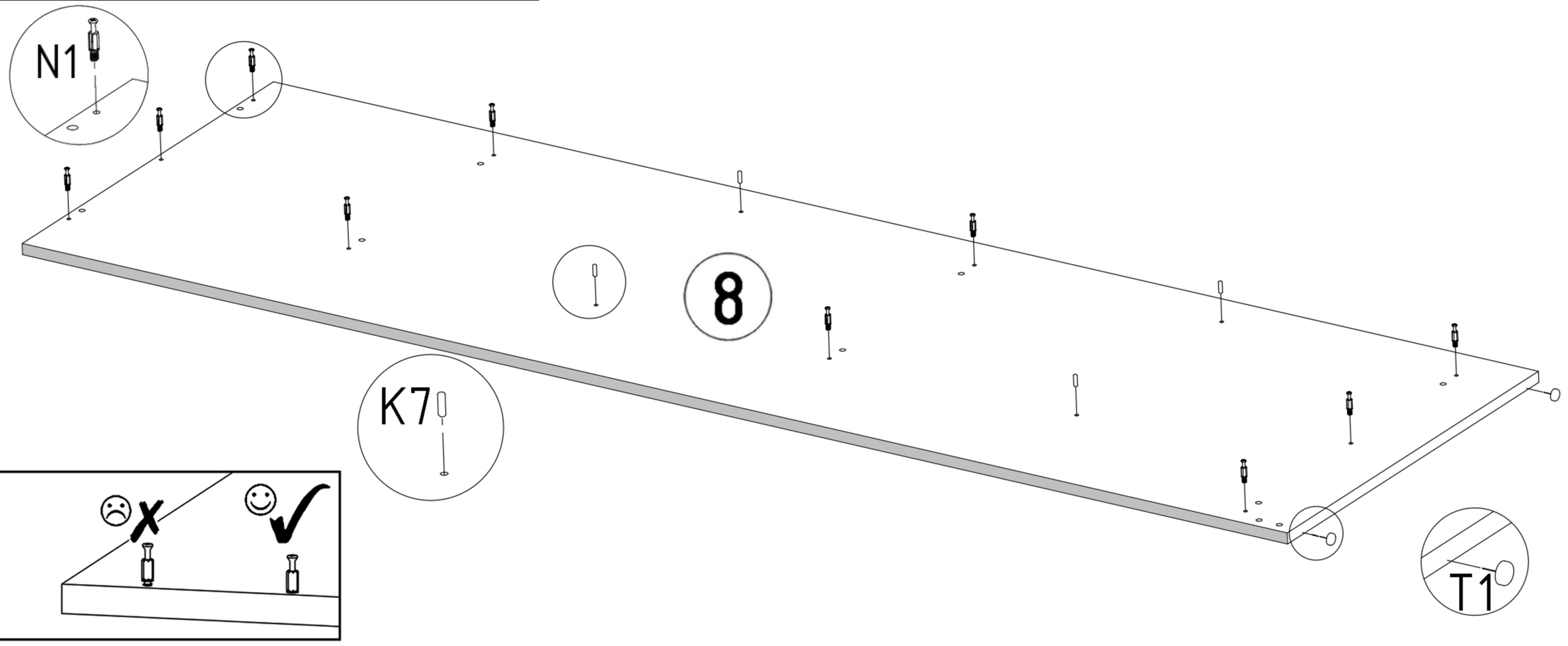




K1




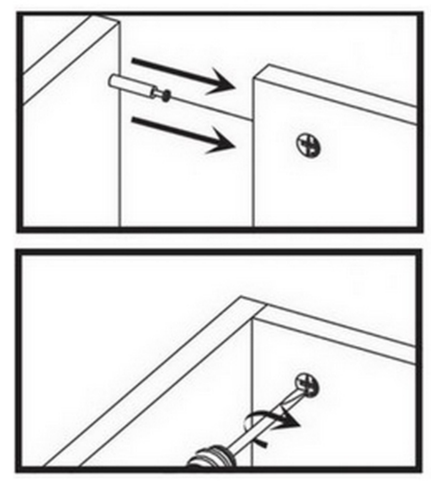

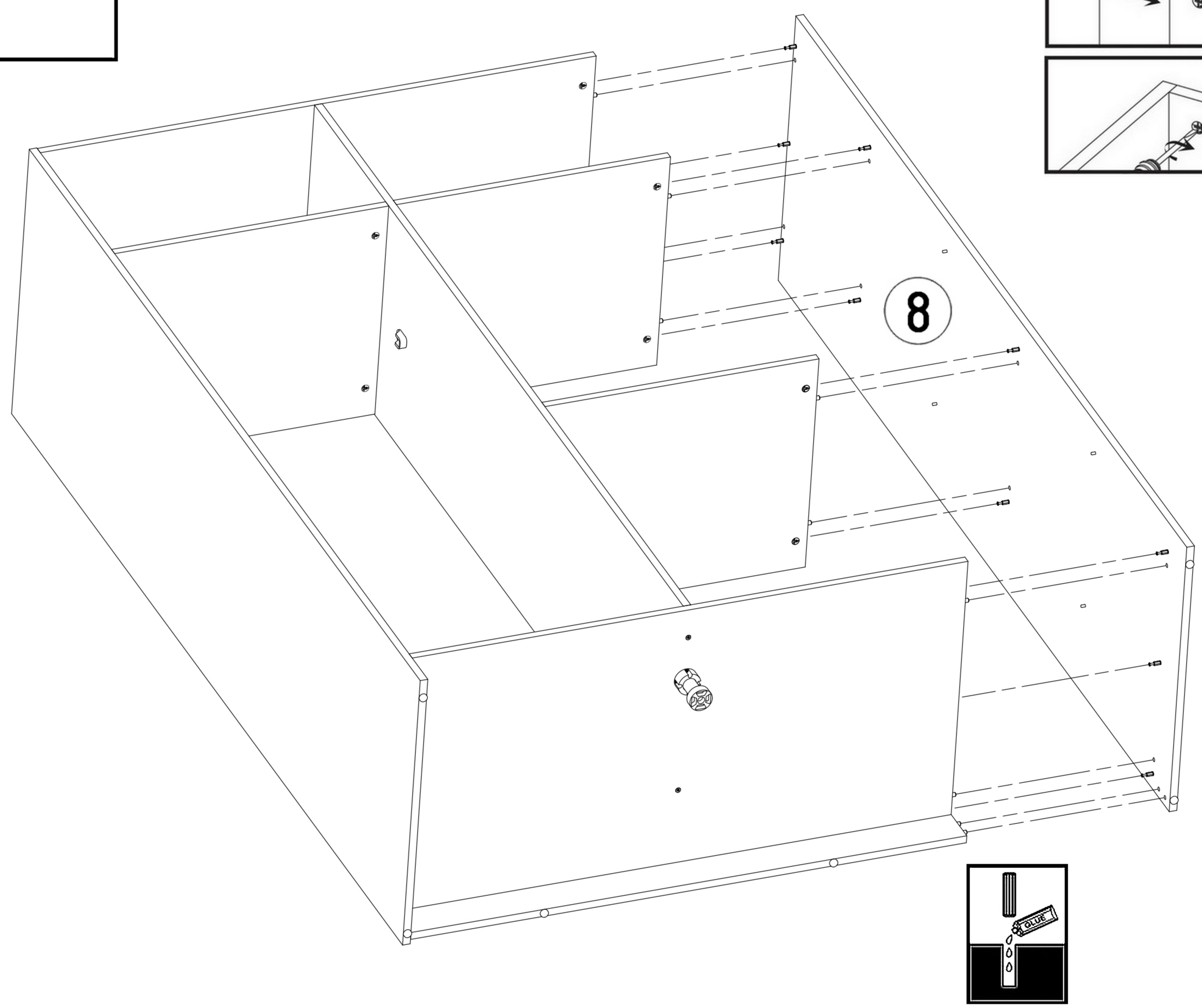

| K4 | S1 | S6 | Z1 | V7 |
|---|---|---|---|---|
| x16 | 3,5x16mm x4 | 2,5x20 x16 | x150 | x2 |

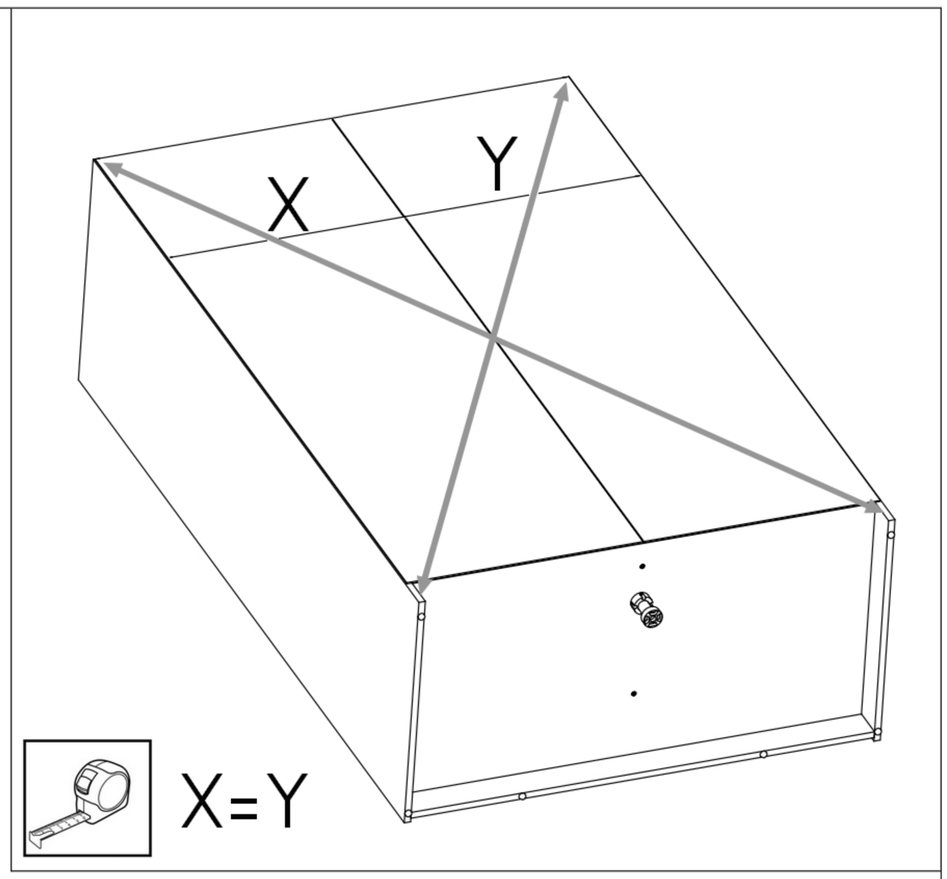


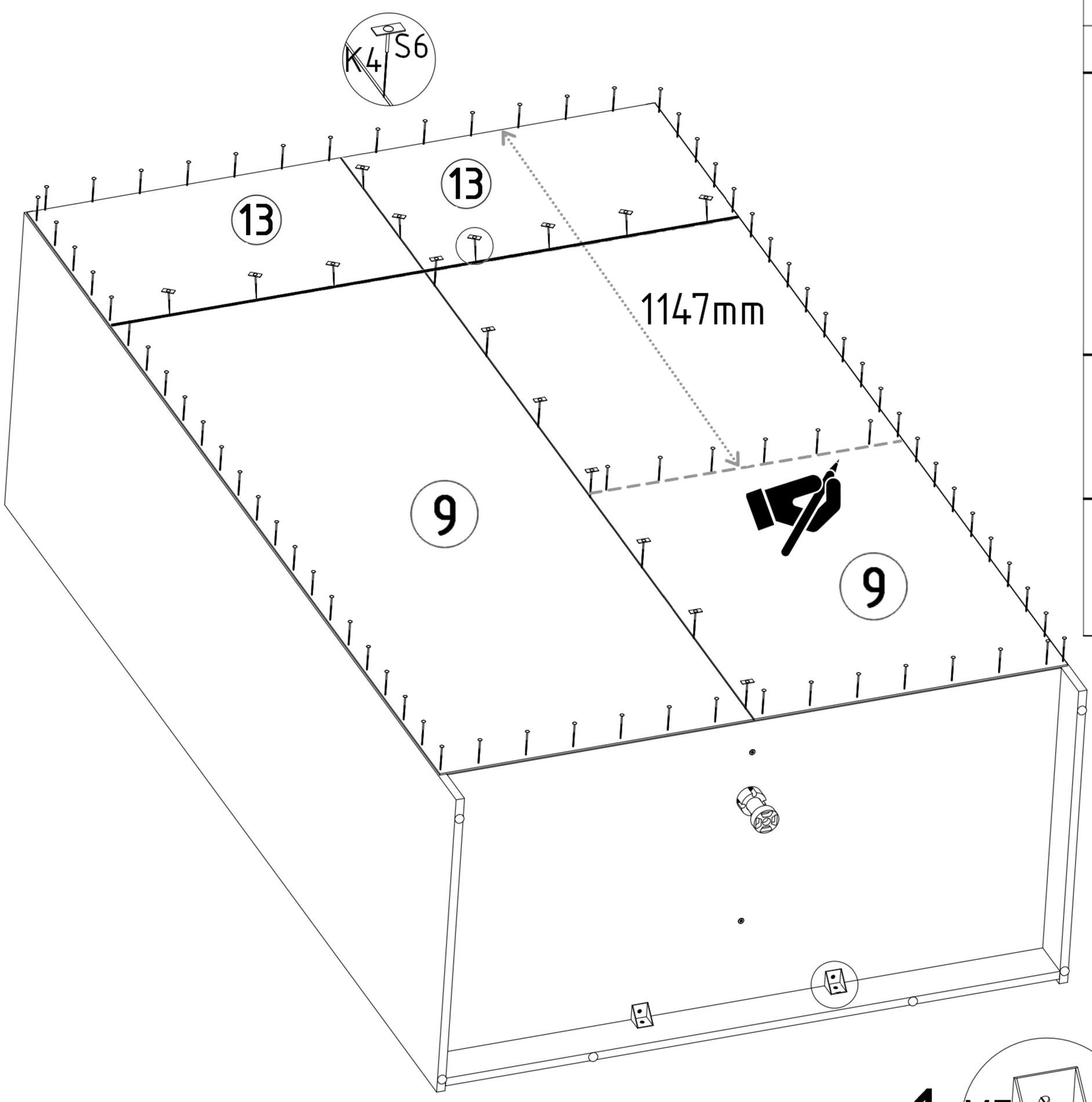


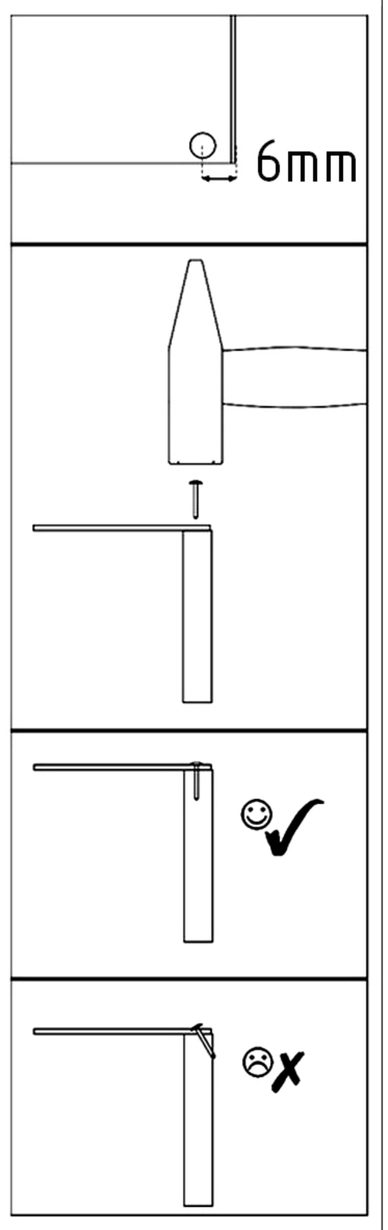


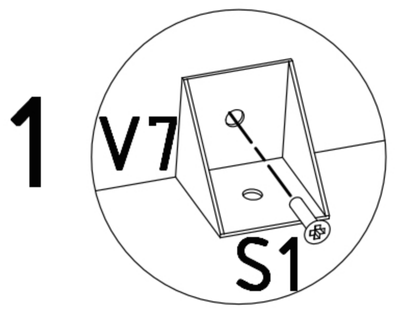


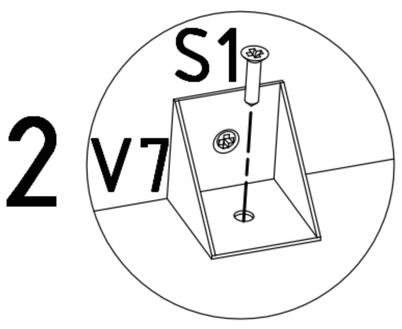

DÓŁ DRZWI / BOTTOM DOOR

11

GÓRA DRZWI / TOP DOOR

GÓRA DRZWI / TOP DOOR

10

DÓŁ DRZWI / BOTTOM DOOR

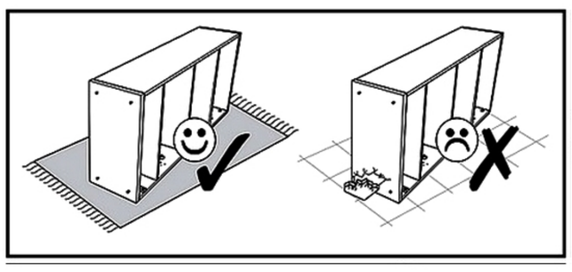

| A7 | A8 | S10 |
|---|---|---|
| x4 | x4 | 4x15 mm x24 |

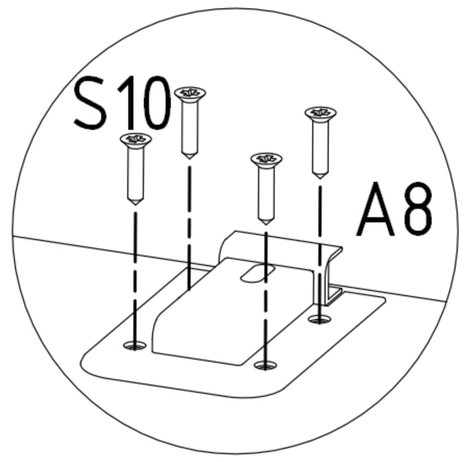


11

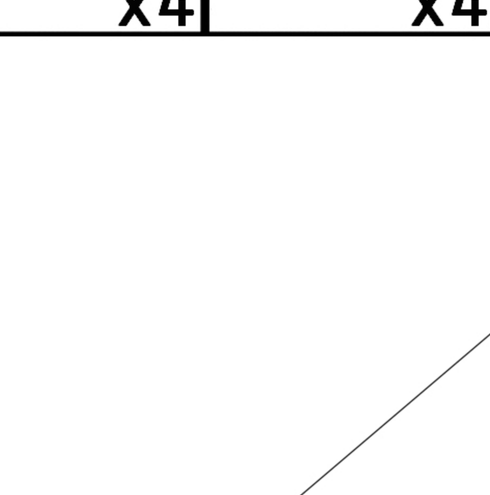


10

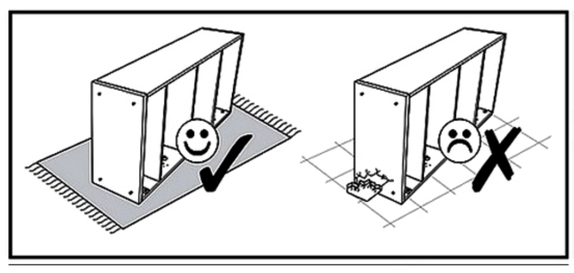

GÓRA DRZWI
BOK DRZWI
TOP DOOR
SIDE DOOR

22mm

GÓRA DRZWI
BOK DRZWI
TOP DOOR
SIDE DOOR

DÓŁ DRZWI
BOK DRZWI
BOTTOM DOOR
SIDE DOOR

DÓŁ DRZWI
BOK DRZWI
BOTTOM DOOR
SIDE DOOR

16mm

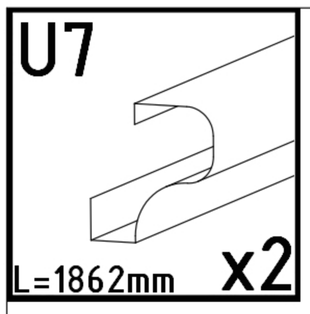
U7
L=1862mm
x2

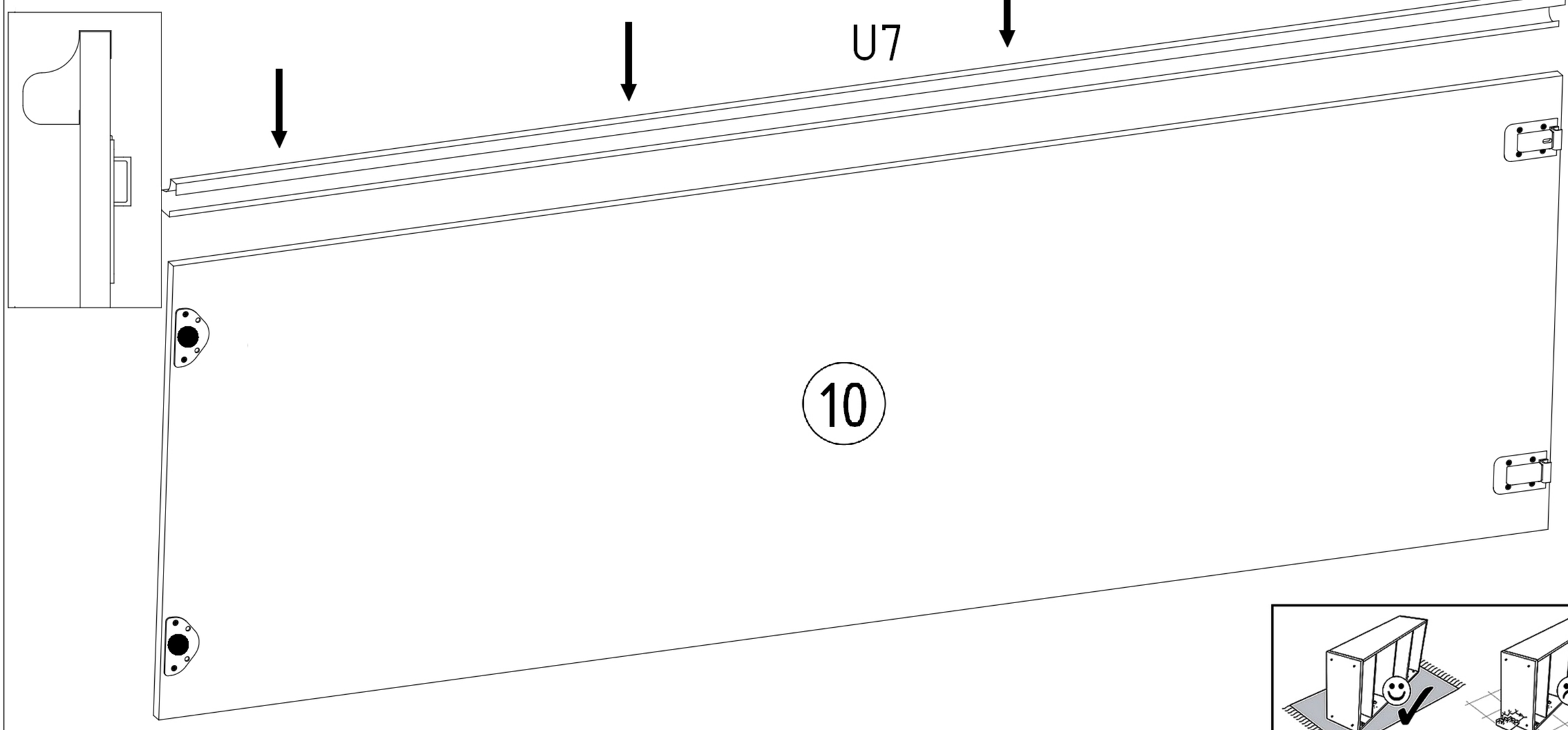
U7
10




U7
11

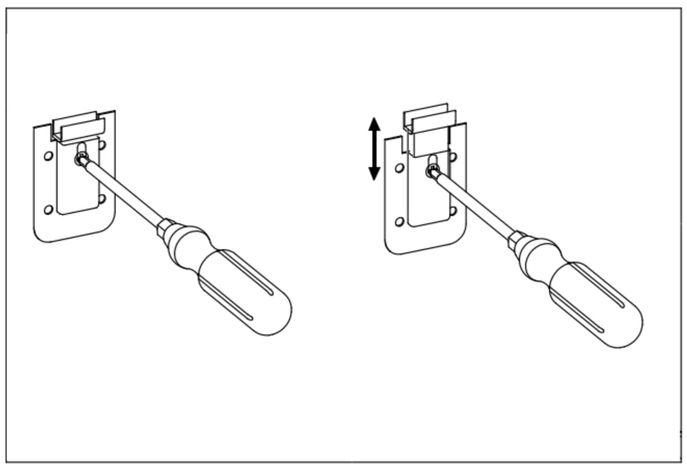

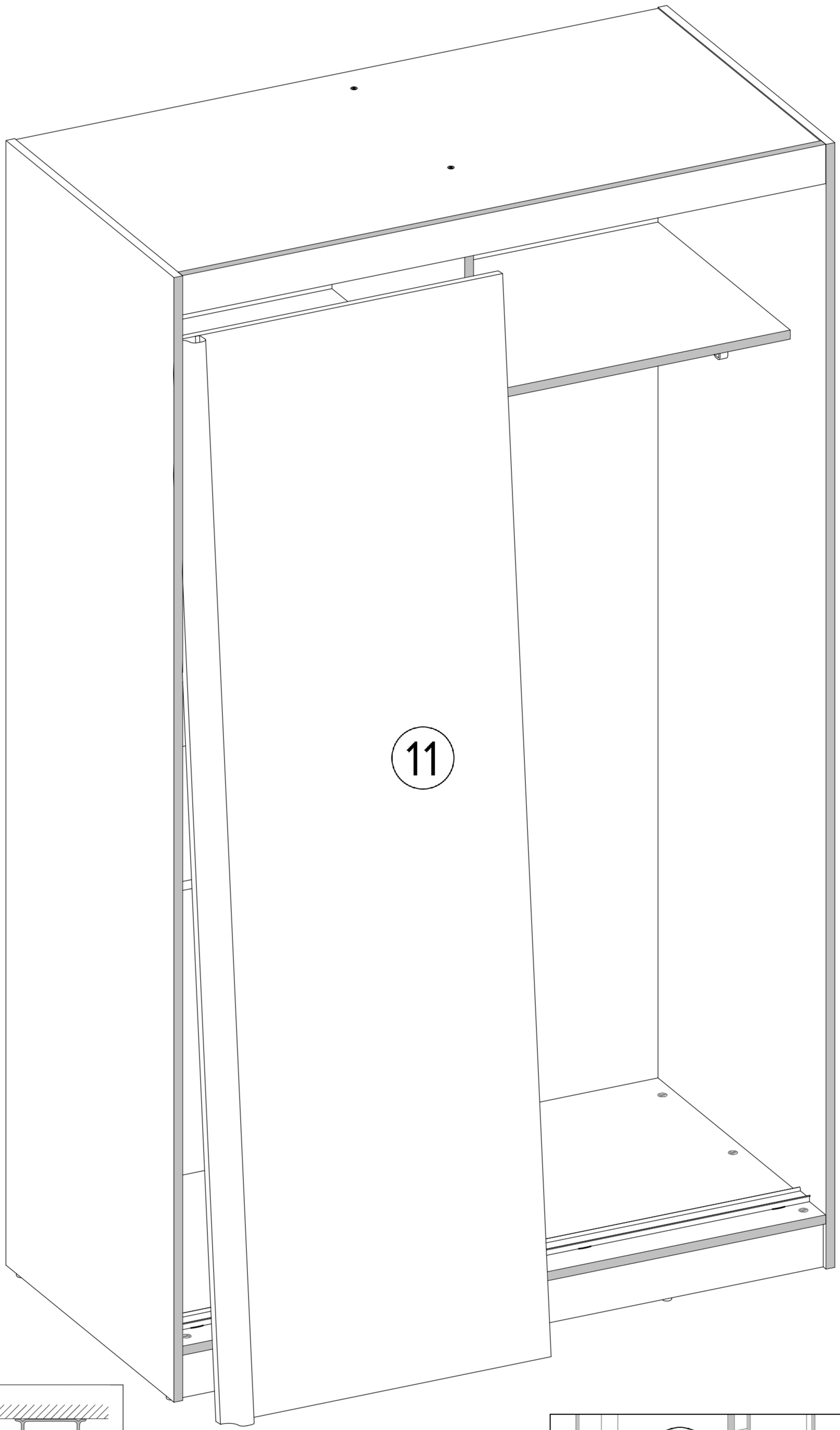
11

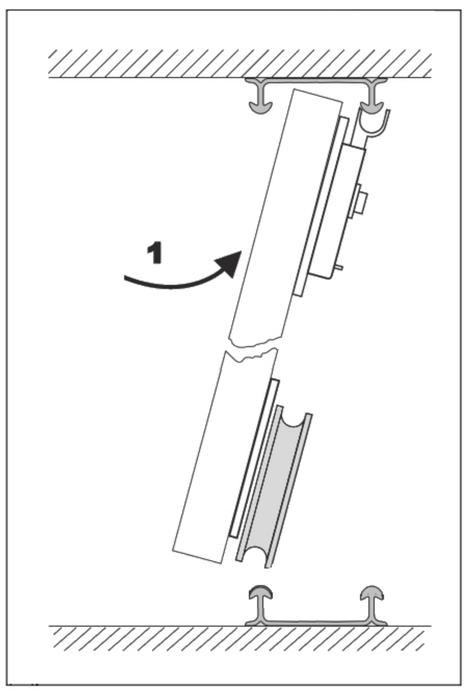
1
2

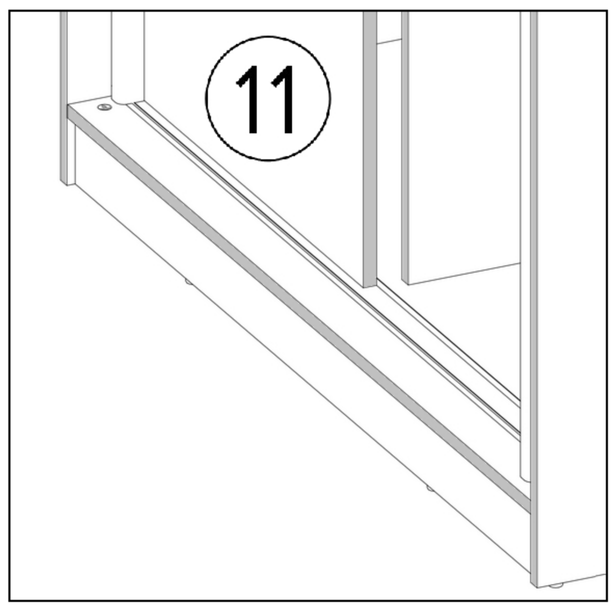
11

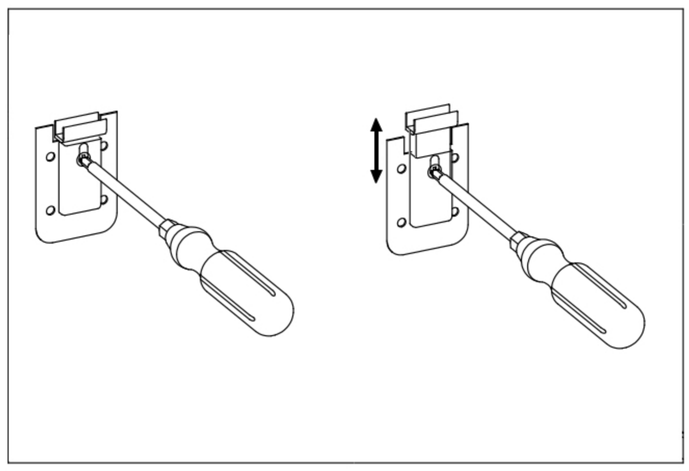

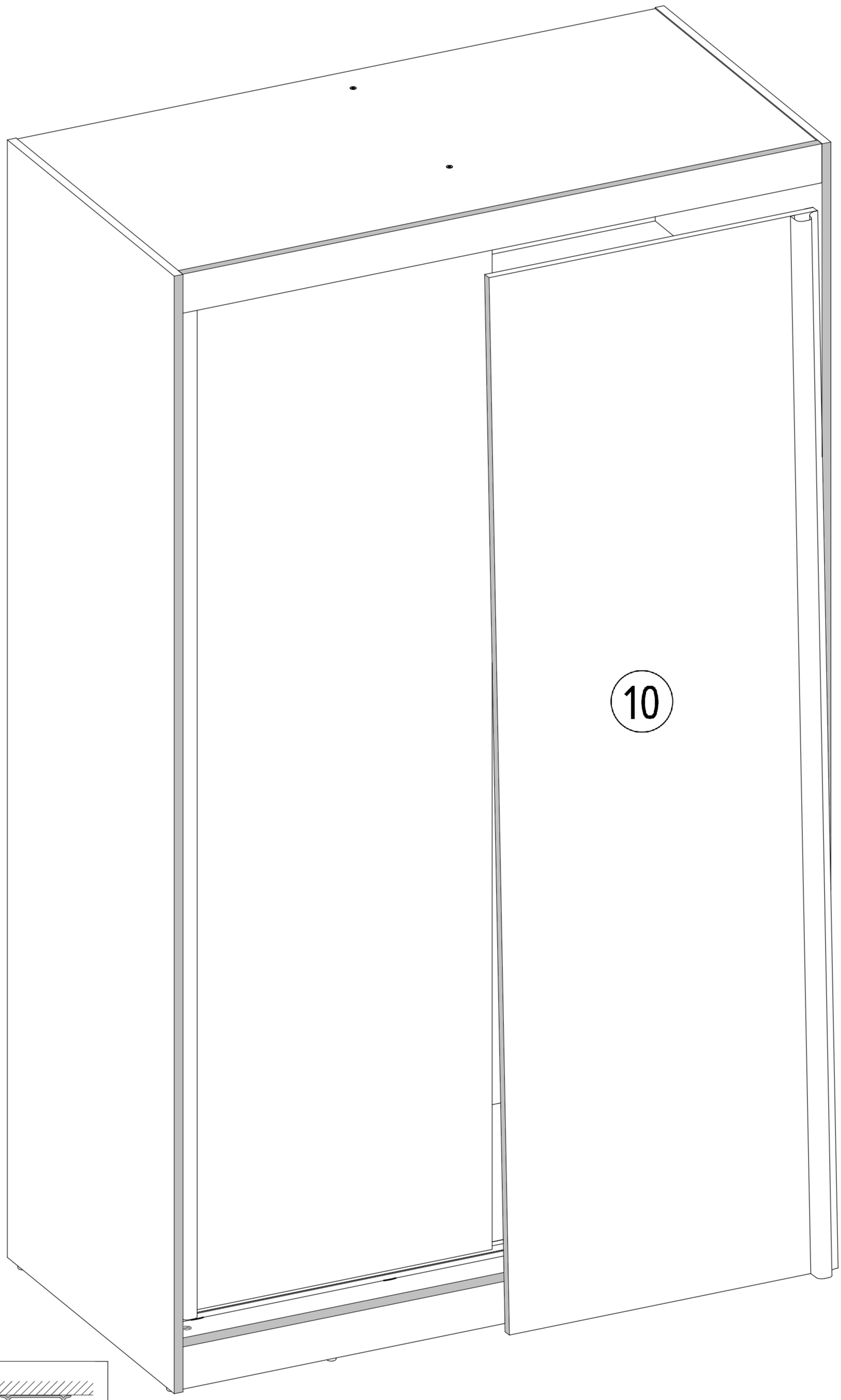
10

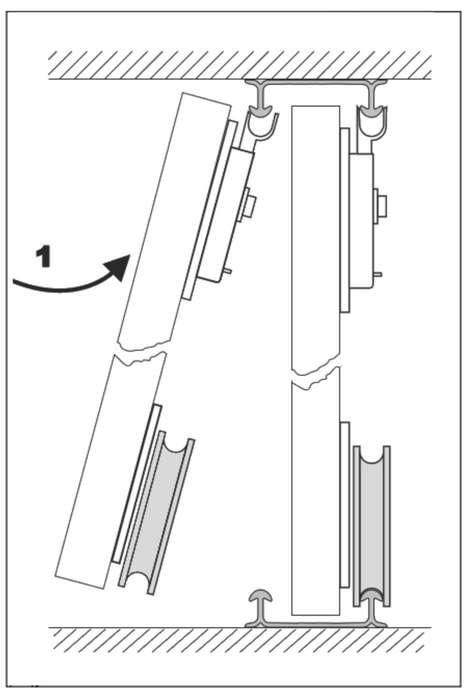
1

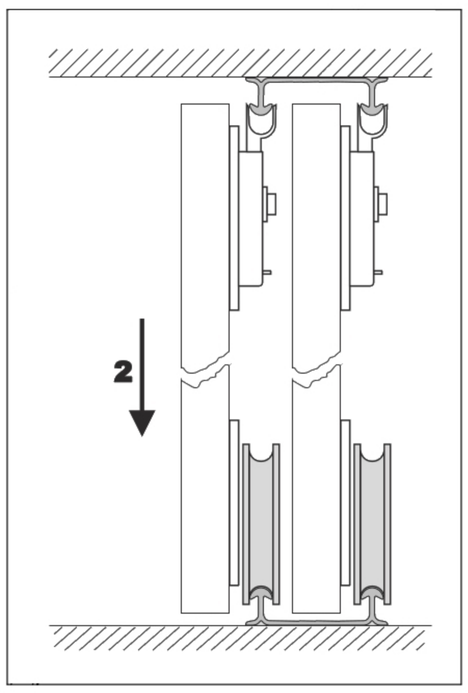
2

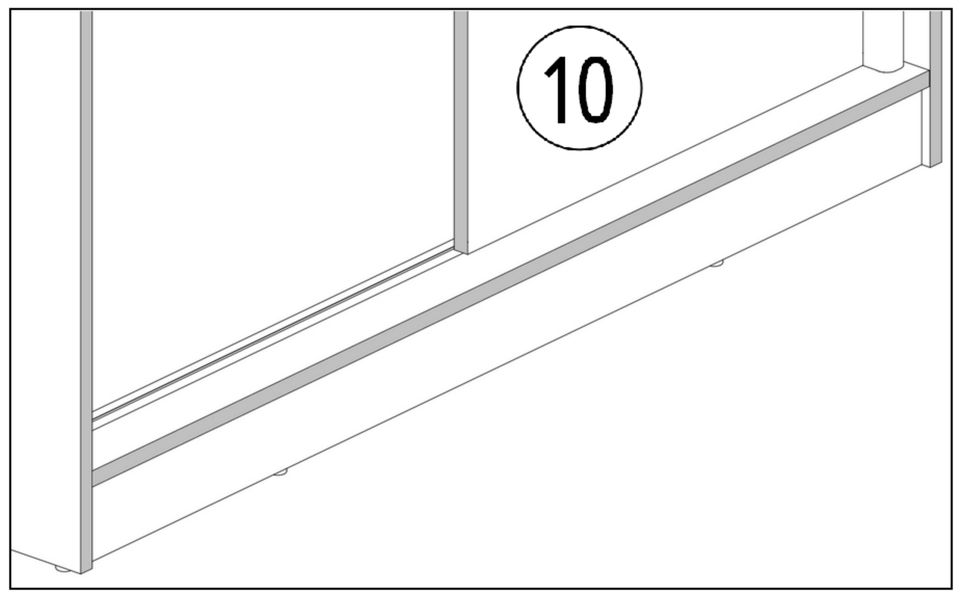
10

| K9 | S1 | U5 | M2 |
|---|---|---|---|
| x1 | 3,5x16mm x2 | x1 | x5 |

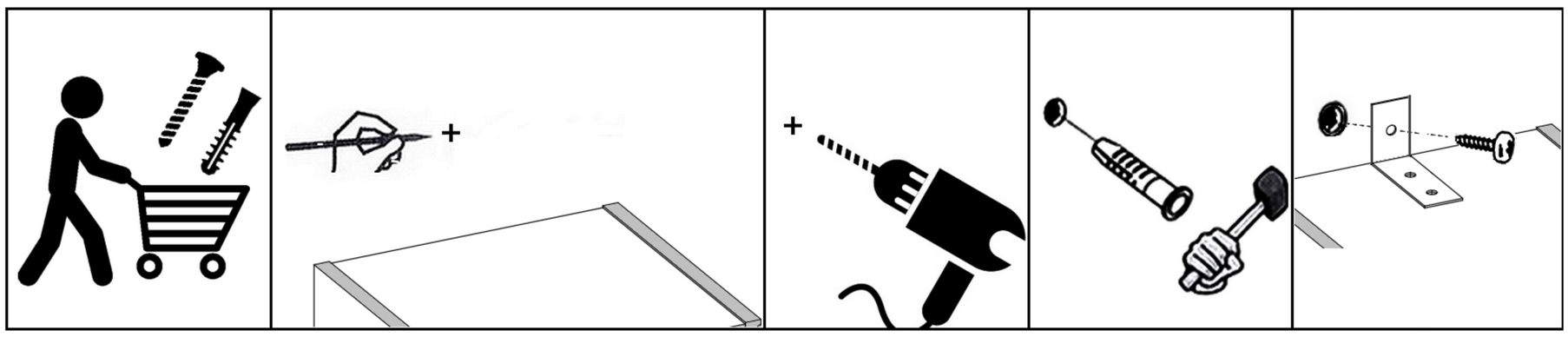

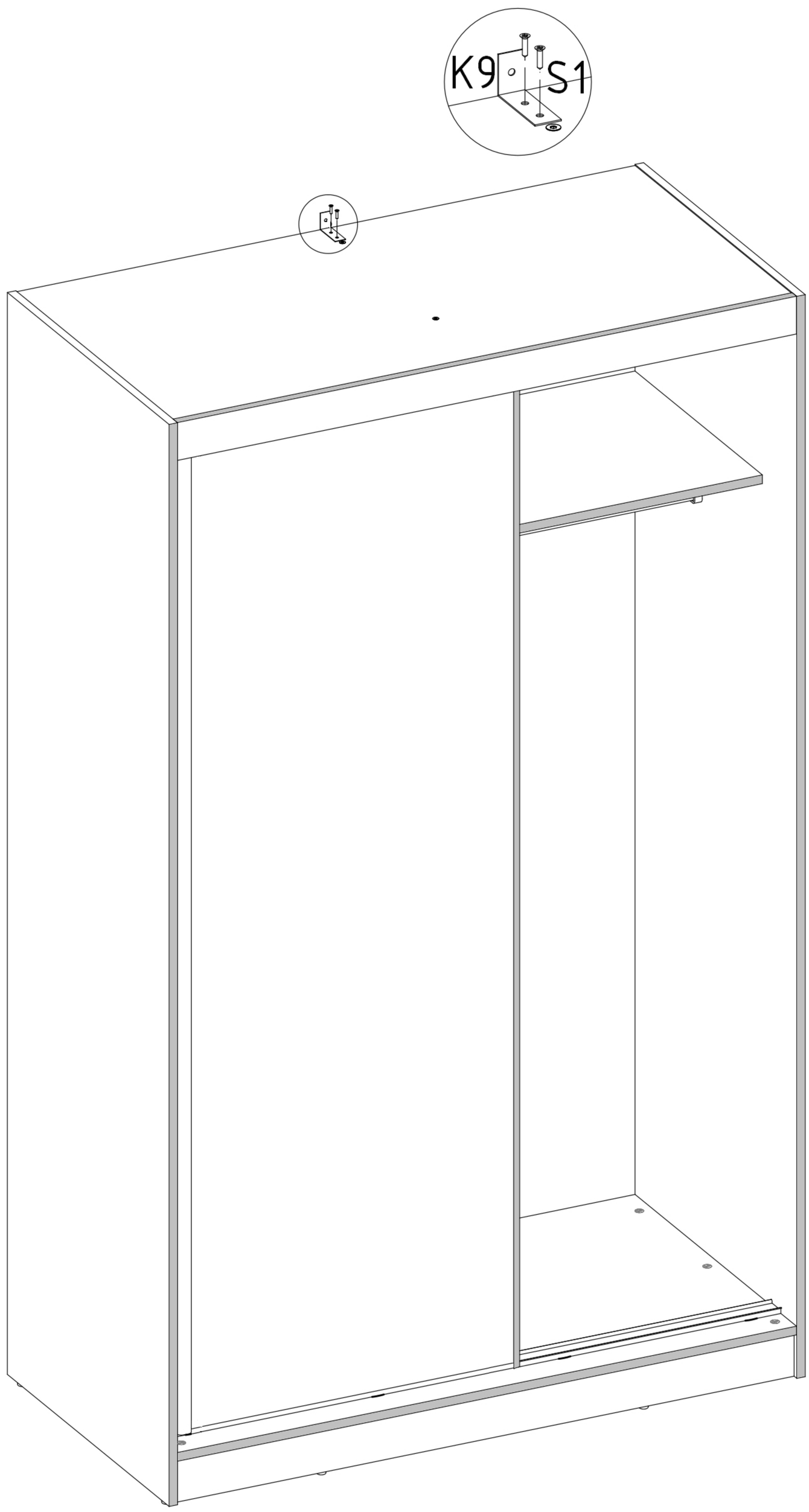


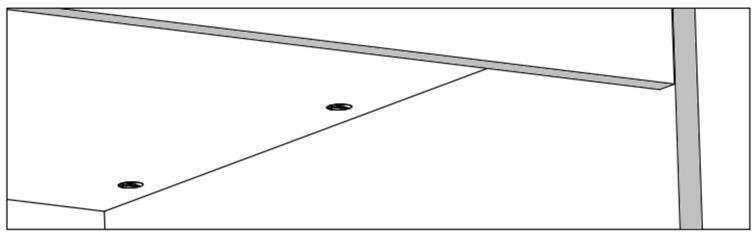

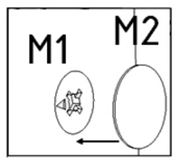


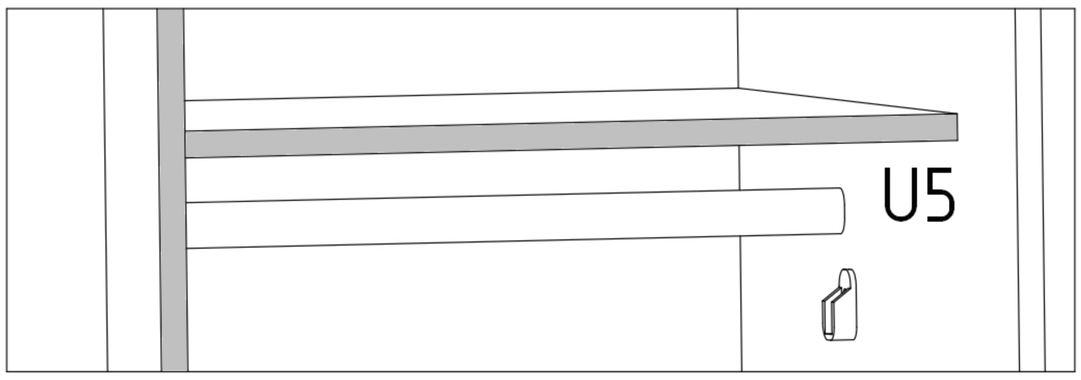


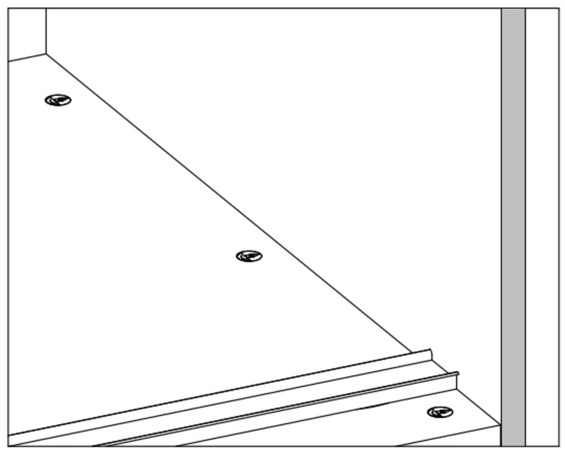

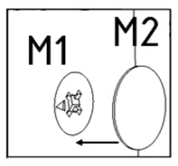

M2

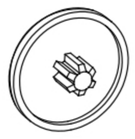

x5

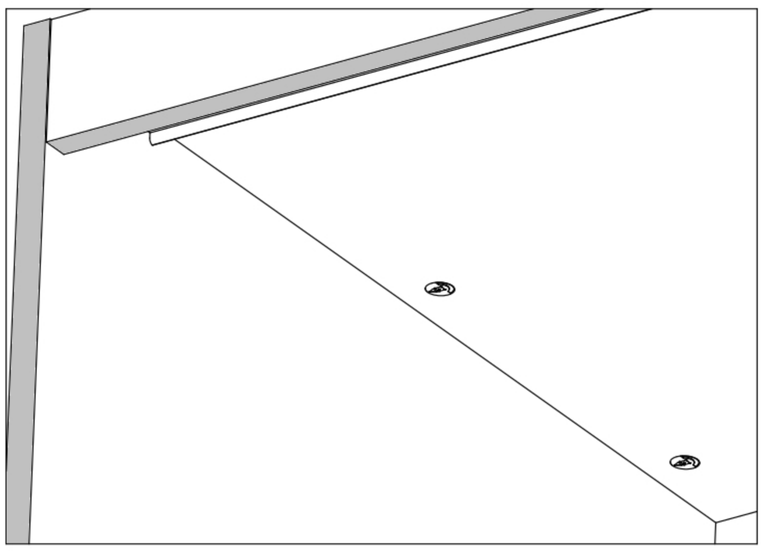

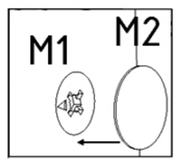







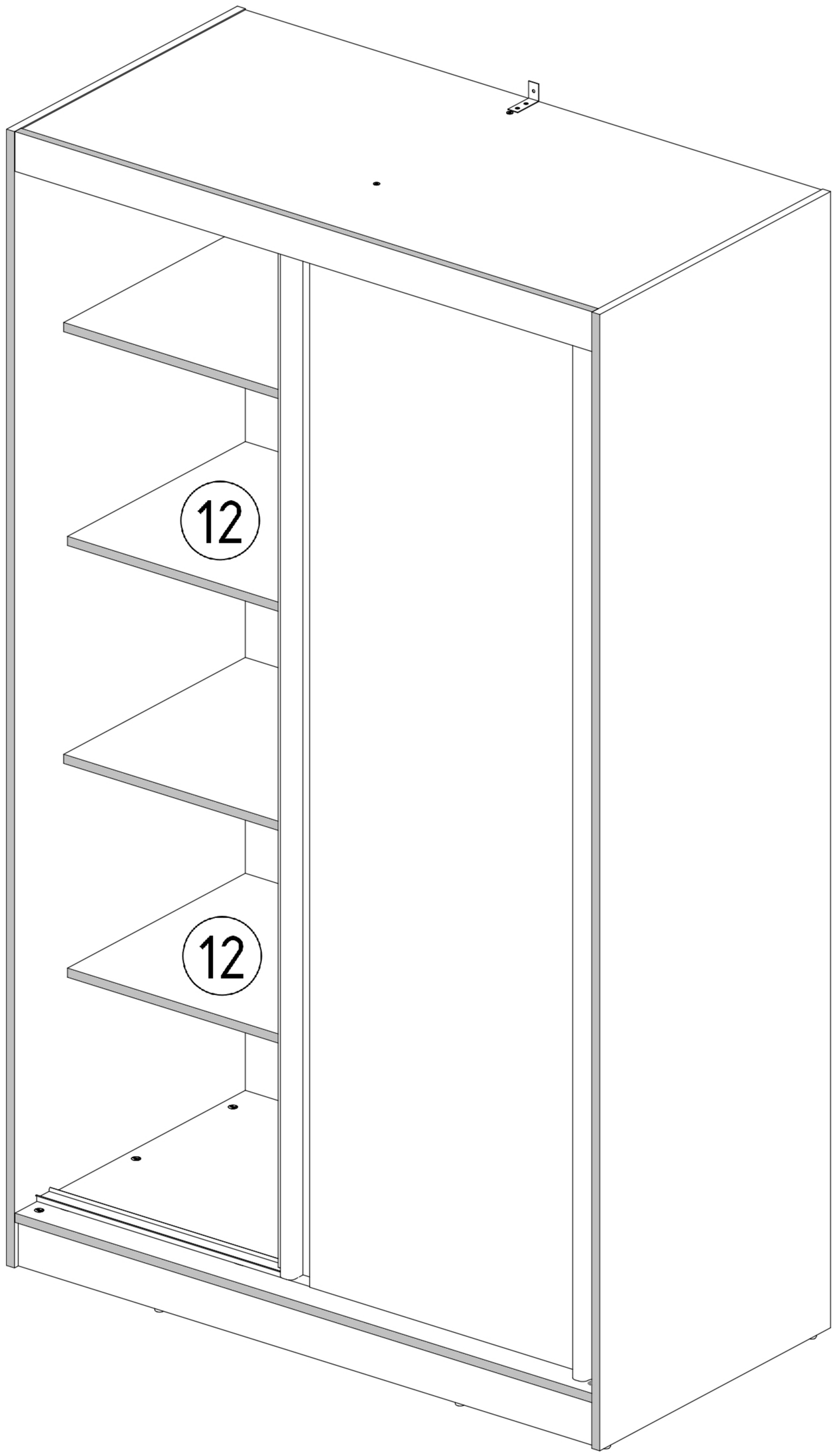

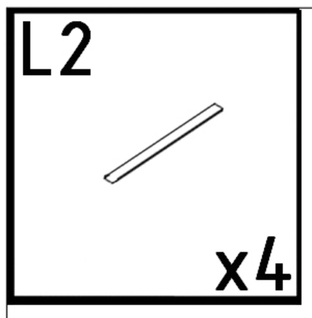
L2
x4

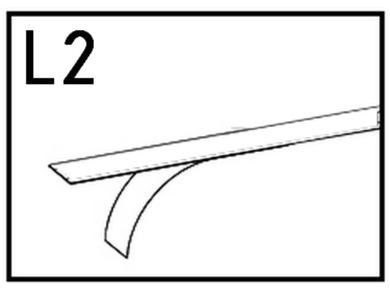
L2

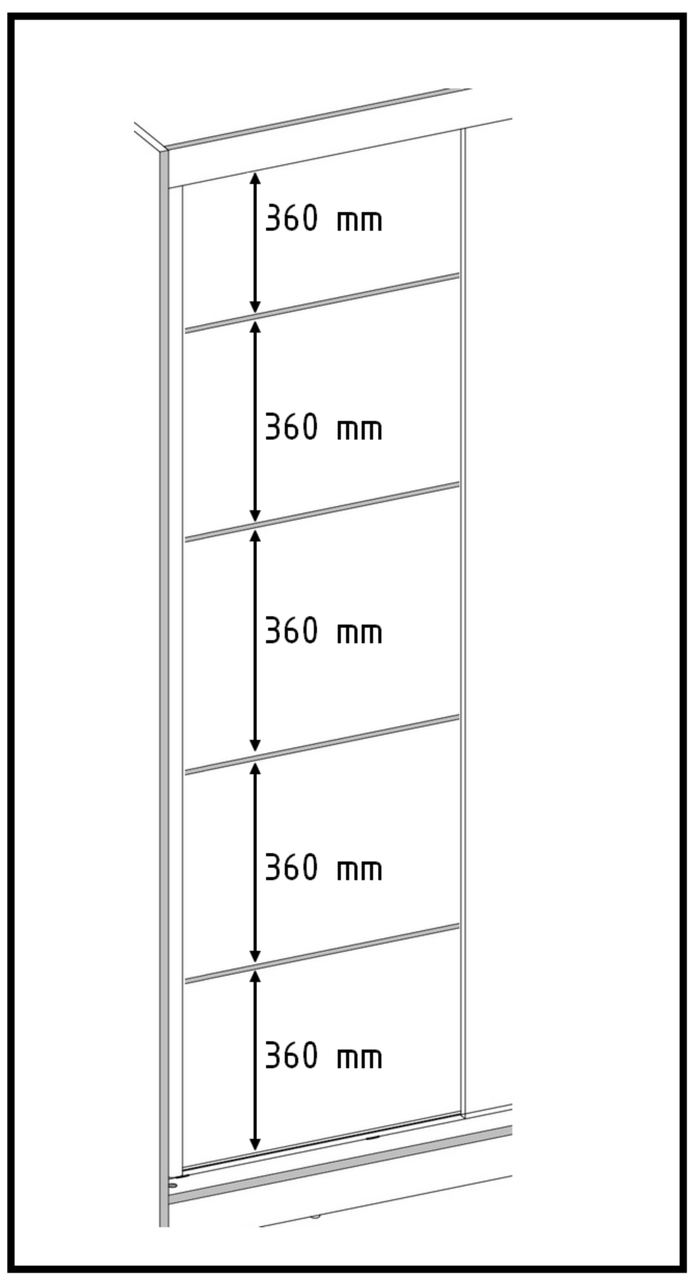
360 mm
360 mm
360 mm
360 mm
360 mm

