INSTRUKCJA MONTAŻU

Komoda 70 cm z 2 parami drzwiczek i 2 szufladami

Kolor: Dąb Artisan

Kod produktu: OR10221



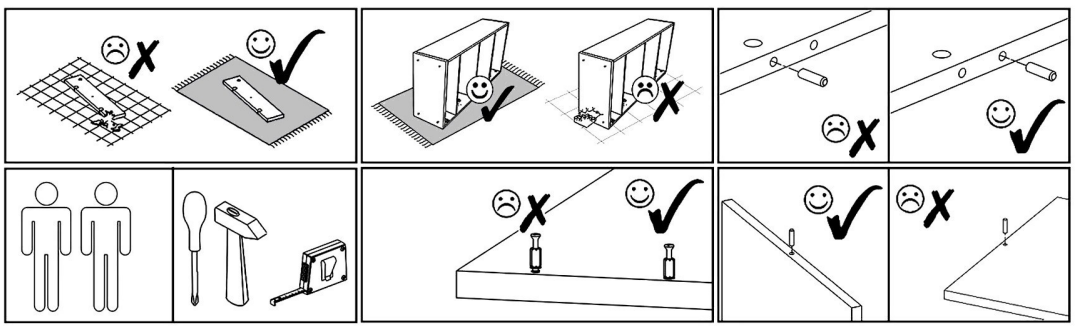

Z2 x8	T1 x4	V12 x1					
N1 L=35mm x14	M1 12x15mm x14	E3 8x50mm x2	S1 3,5x16mm x16	E1 8x30mm x34	V15 x5	S6 2,5x20mm x5	V13 x1
P3 L=350mm x2	Z1 x65	R1 6x8mm x8	V16 5x16mm x8	B1 B ø17/4mm x4	A1 ZP x4	F1 7x50mm x2	F3 Hex 4mm x1

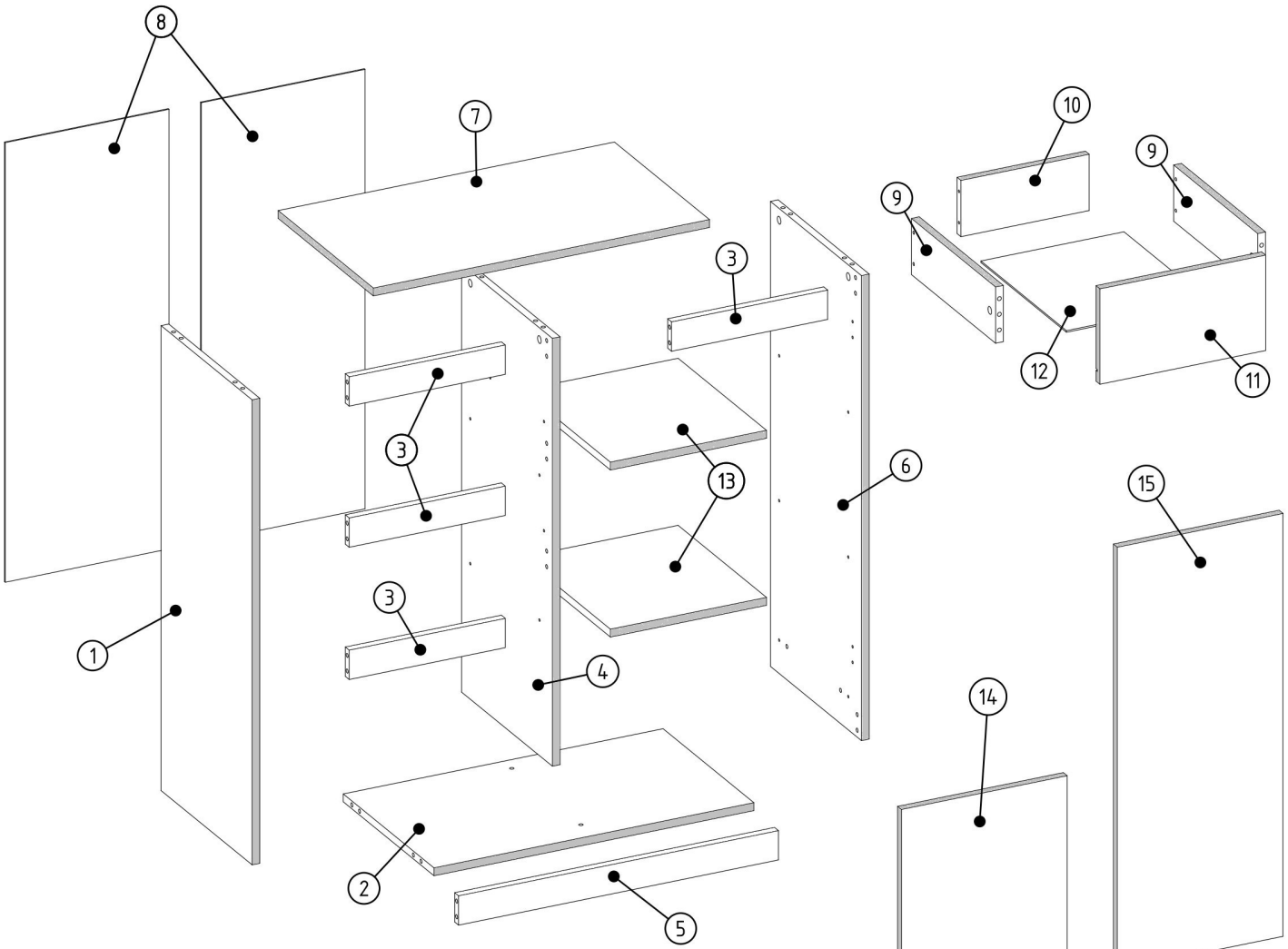

ID	NUMBER	QUANTITY
000050	15	1
000049	14	1
000040	13	2
000028	12	2
000046	11	2
000015	10	2
000054	9	4
000216	8	2
000153	7	1
000276	6	1
000143	5	1
000204	4	1
000041	3	4
000146	2	1
000275	1	1

N1	M1	T1	E1
L=35mm x2	12x15mm x2	x2	8x30mm x2

R1	P3
6x8mm x4	L=350mm x2

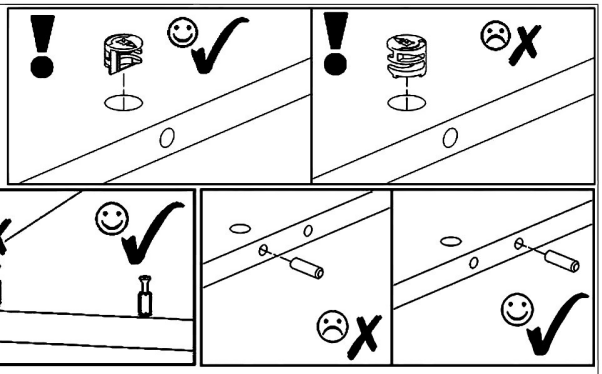

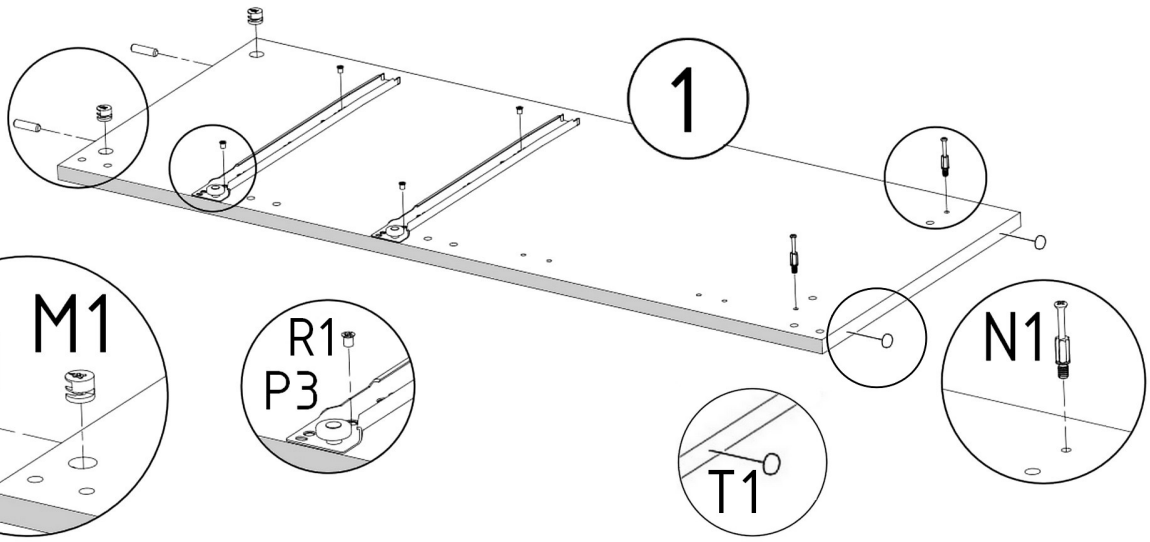

N1	T1	E1	V16	M1
L=35mm x2	x2	8x30mm x2	5x16mm x4	12x15mm x2

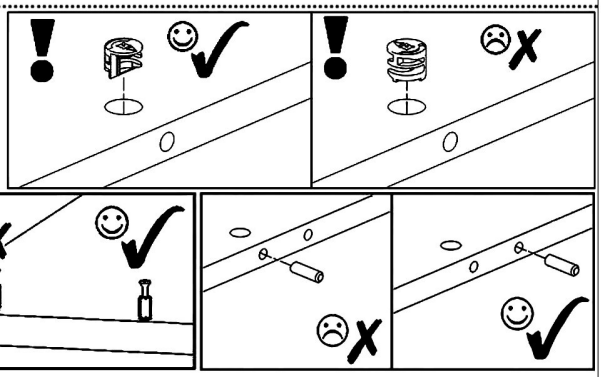

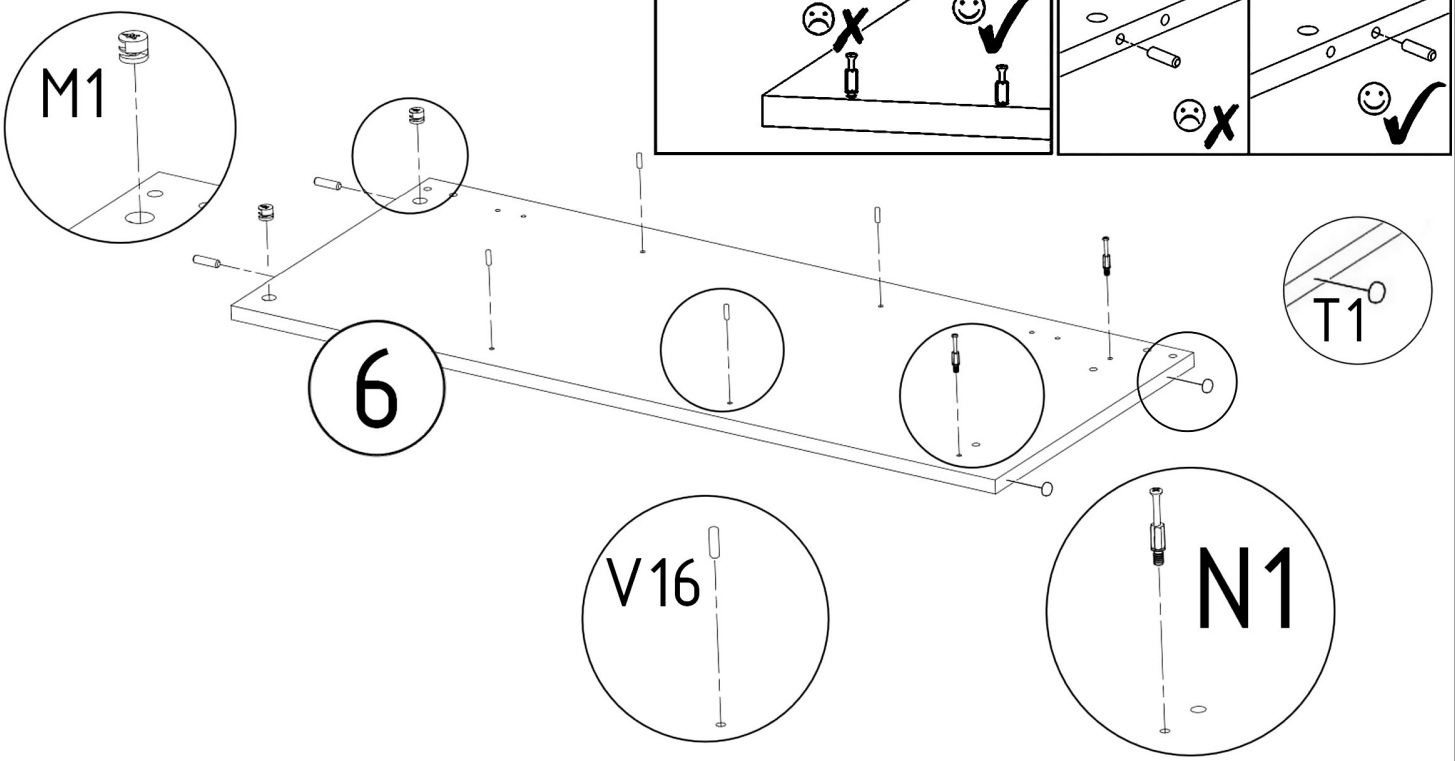

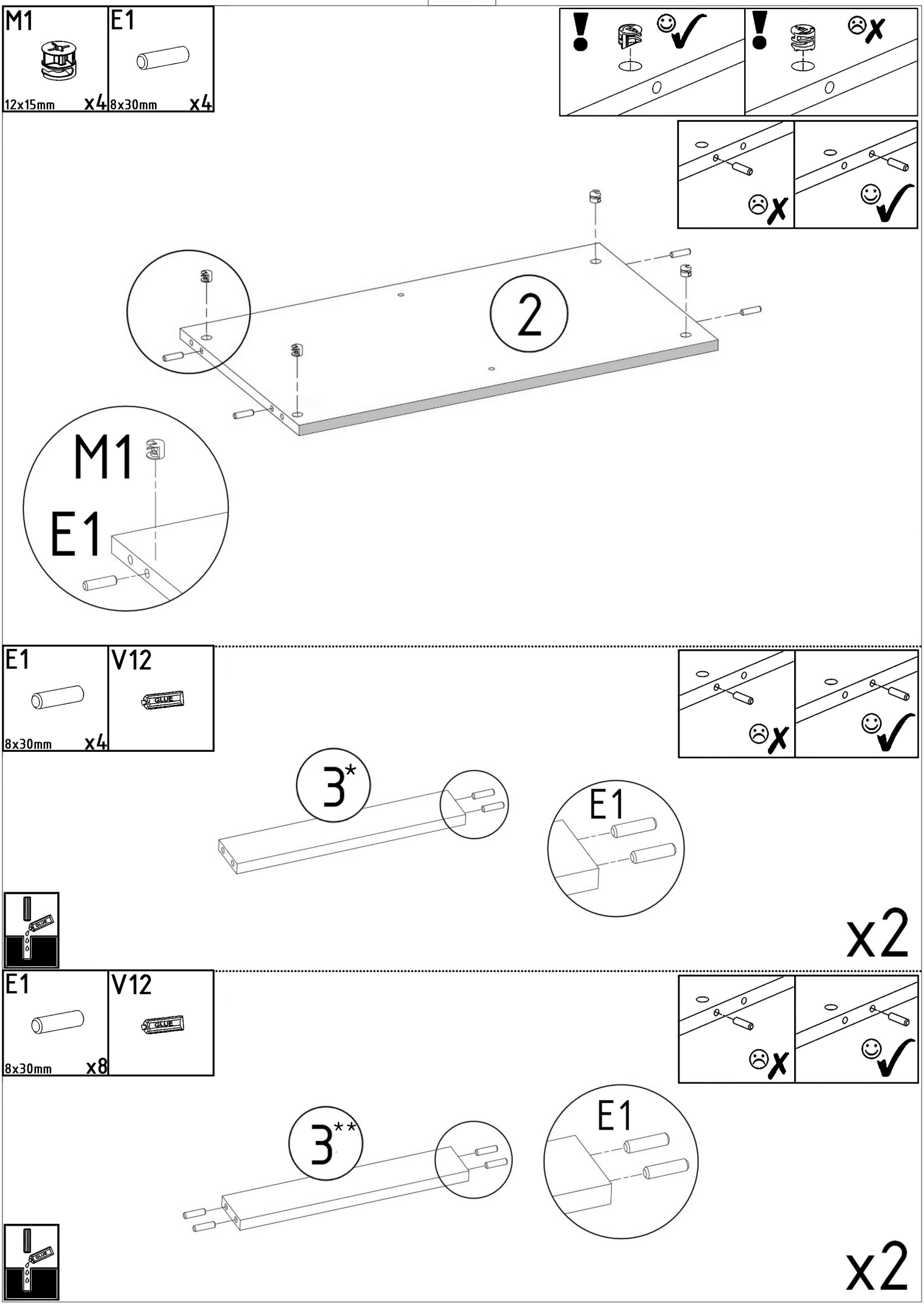
M1
12x15mm x4
E1
8x30mm x4
2
M1
E1
E1
8x30mm x4
V12
GLUE
3*
E1
x2
E1
8x30mm x8
V12
GLUE
3**
E1
x2

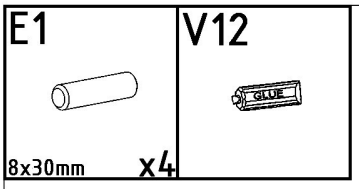
E1
8x30mm
x4
V12
GLUE

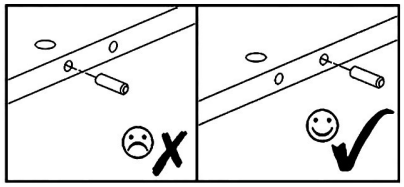

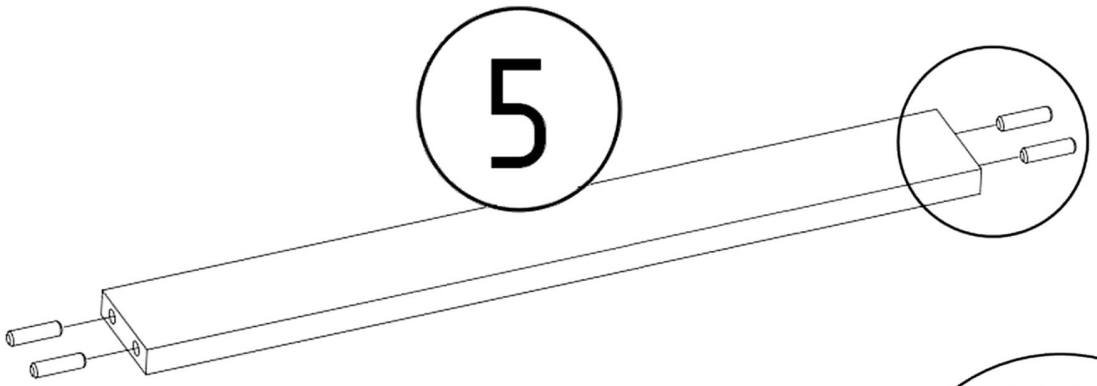
5

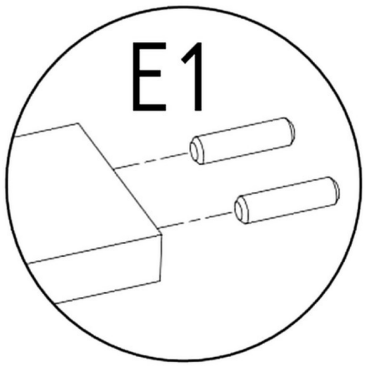
E1

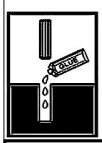
GLUE

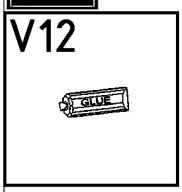
V12
GLUE

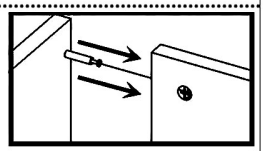

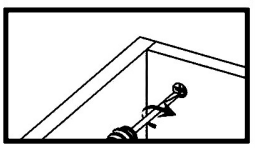

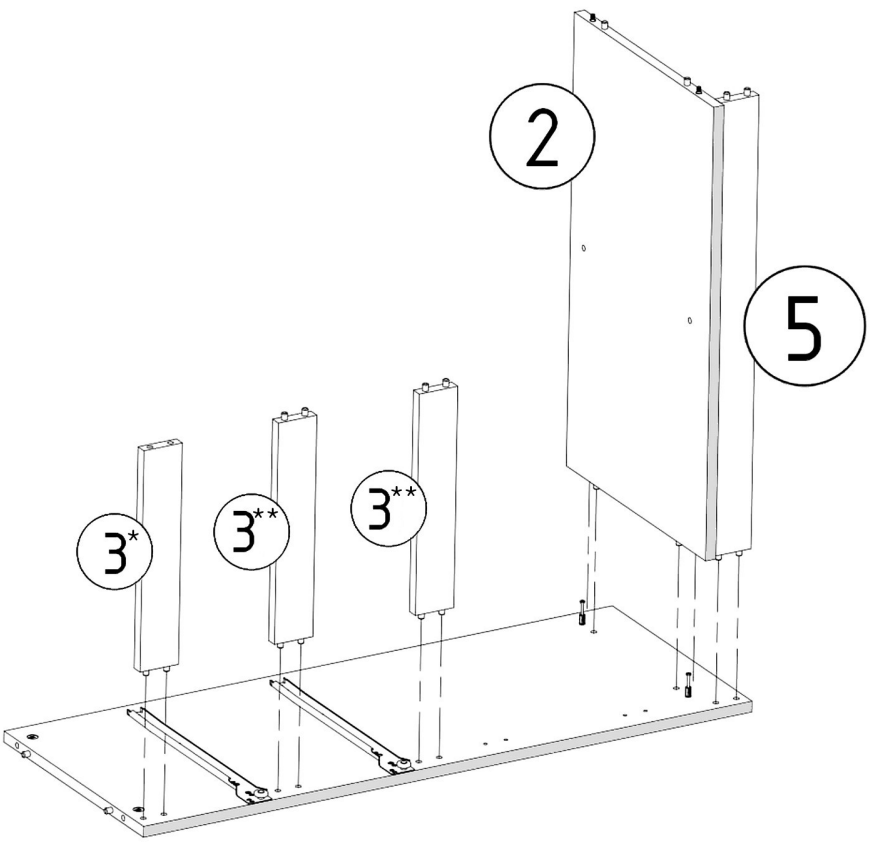
2
5
3*
3**
3**

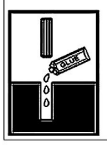
GLUE

E1	M1	P3	R1
		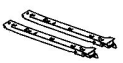	
8x30mm x2	12x15mm x2	L=350mm x2	6x8mm x4

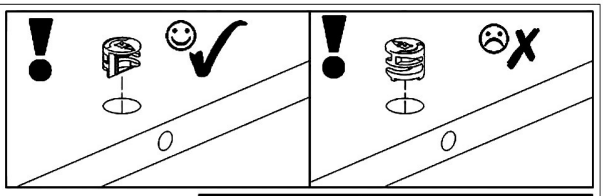

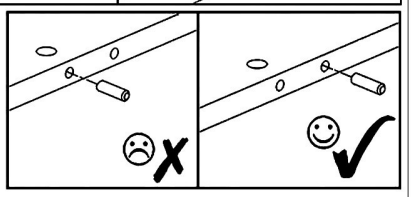

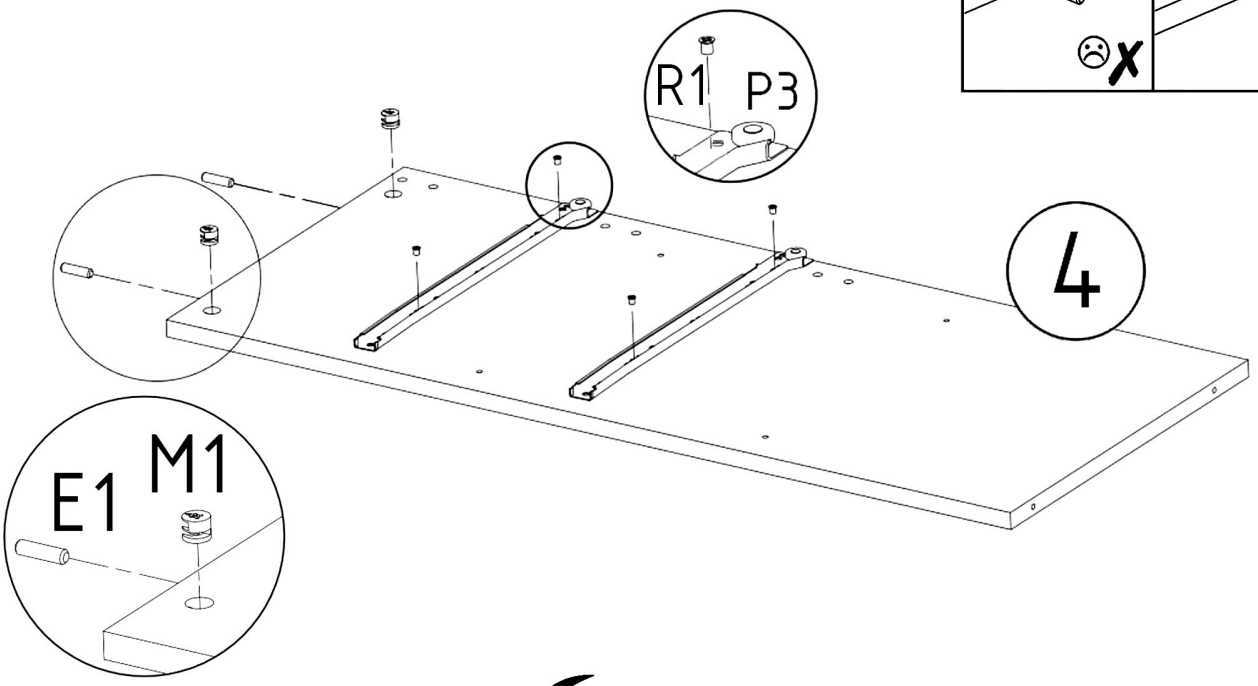

V16

5x16mm x4

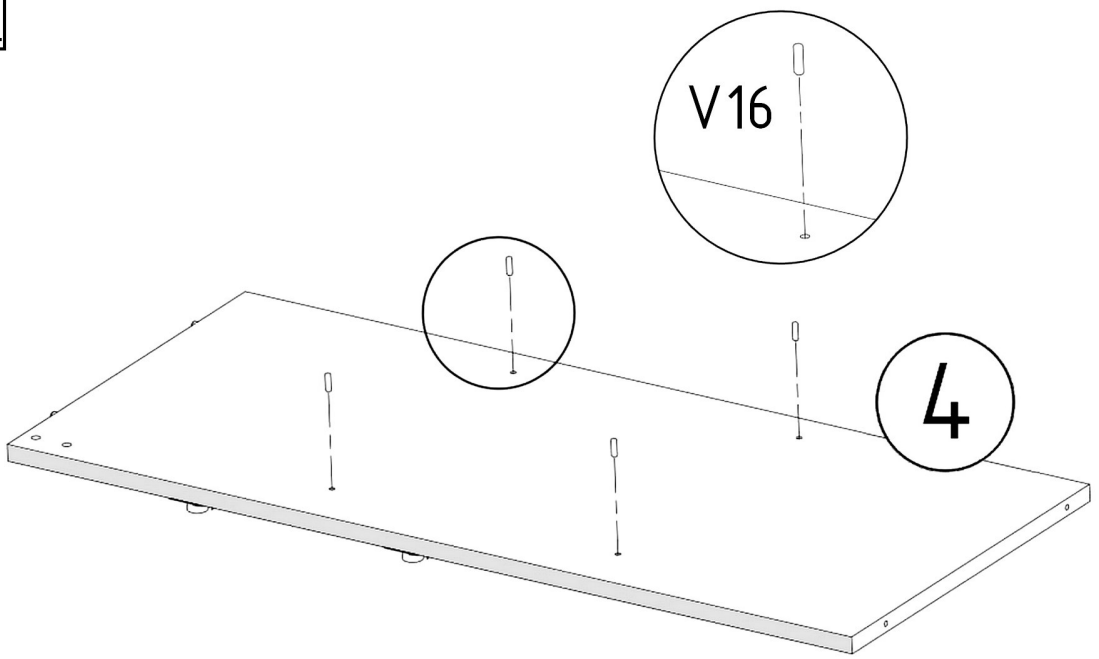

E3	V12	F1	F3
		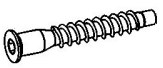	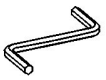
8x50mm x2		7x50mm x2	Hex 4mm x1

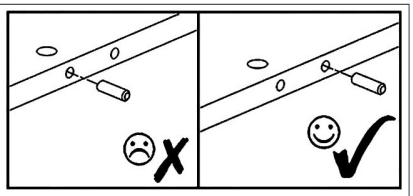

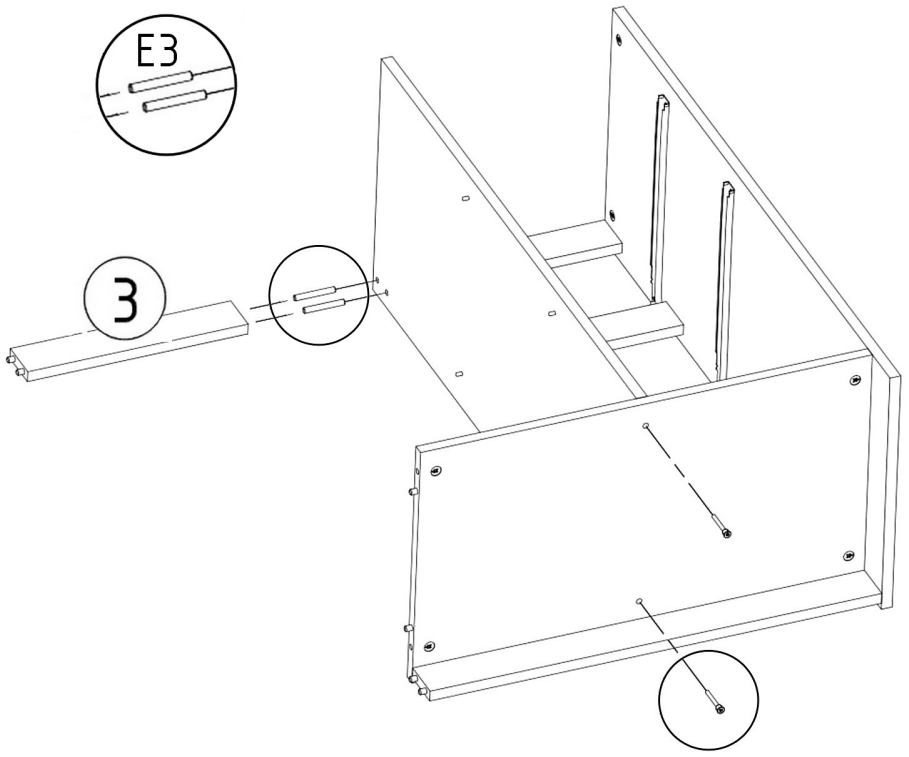

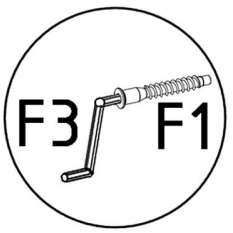

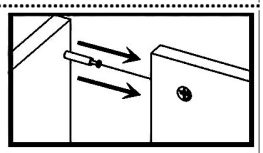

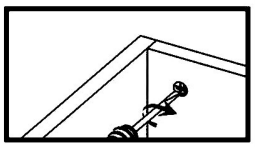

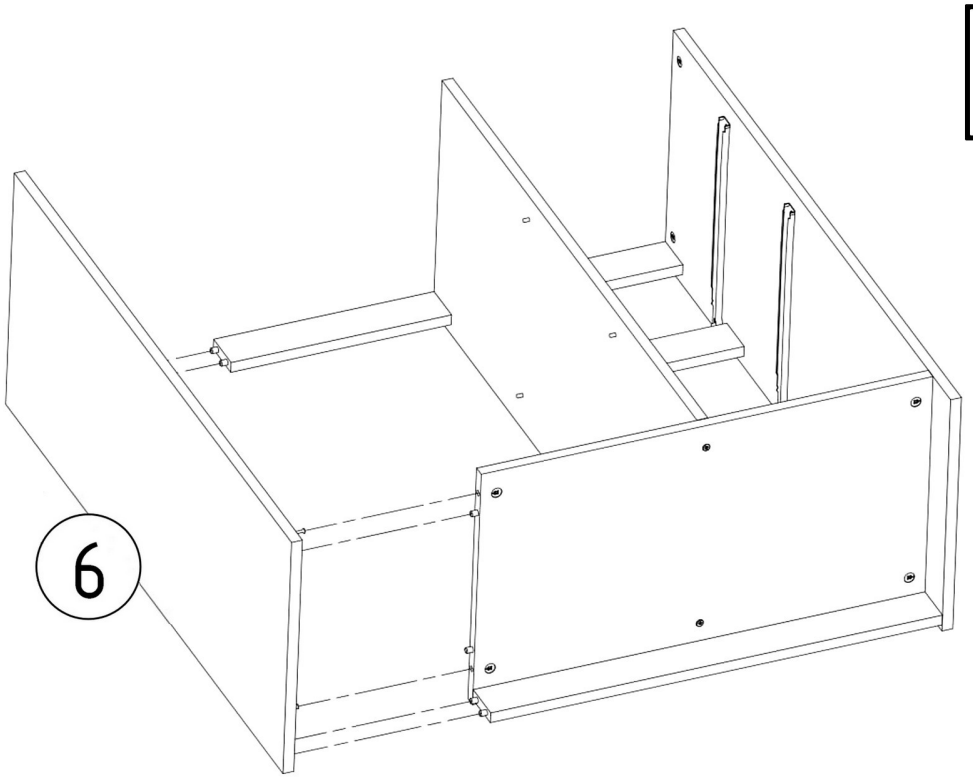

N1



L=35mm x6

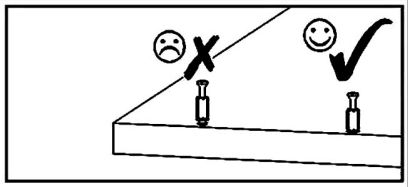

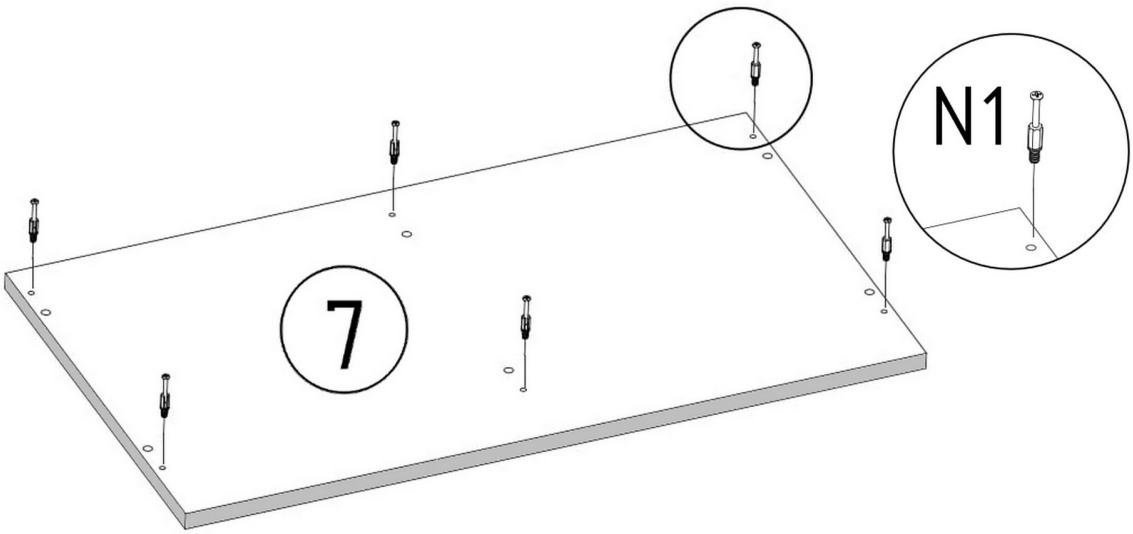

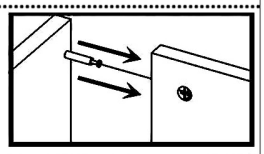

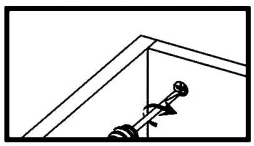

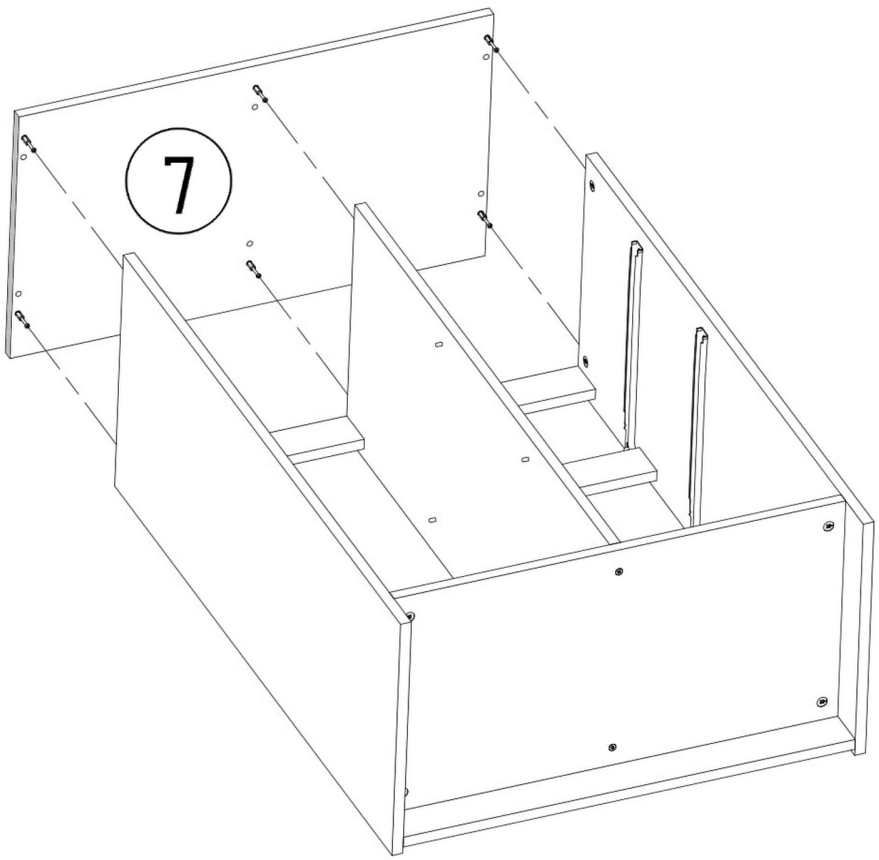

Z1	V15	S6
x55	x5	2,5x20mm x5

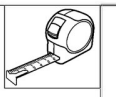

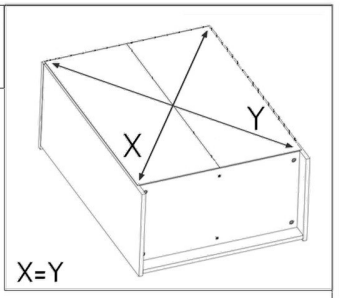

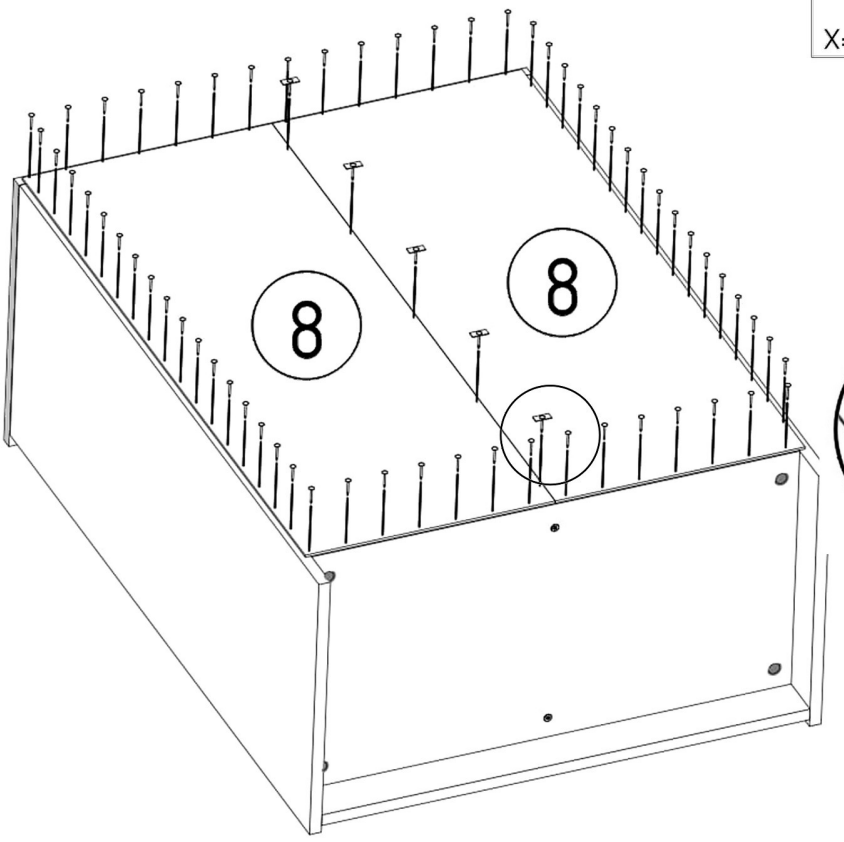



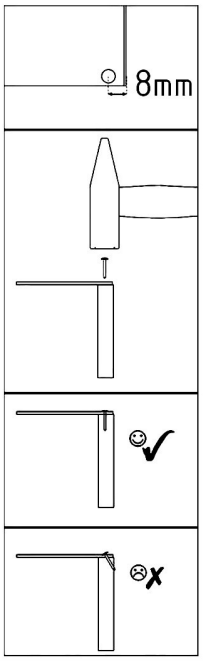

M1	E1	Z2
12x15mm x4	8x30mm x8	x8

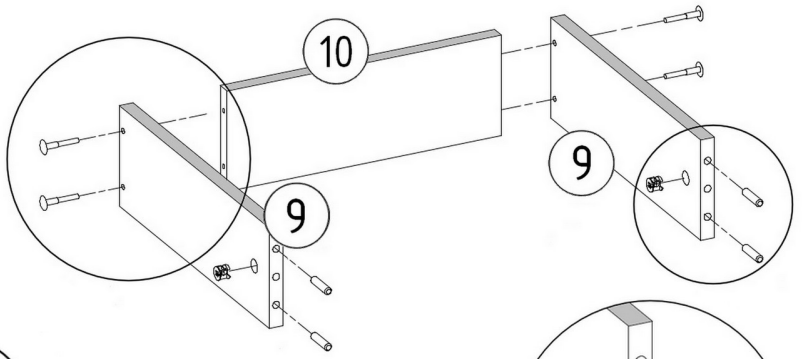

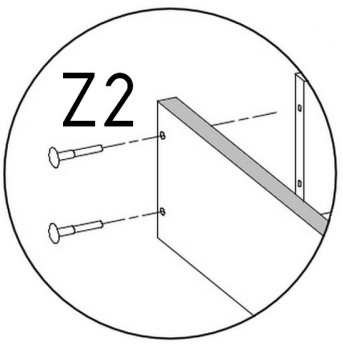

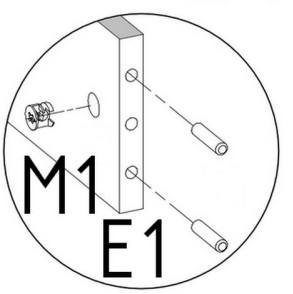

x2

N1



L=35mm x6

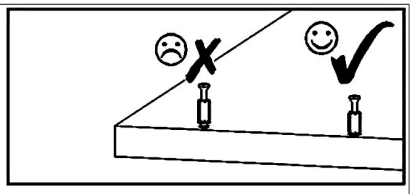

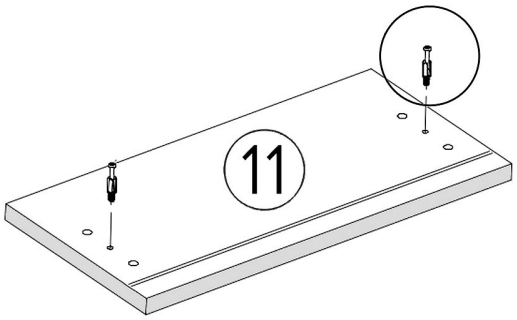

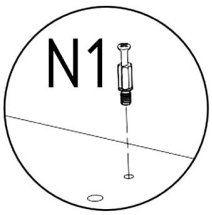

x2

B1



ø17/4mm x4

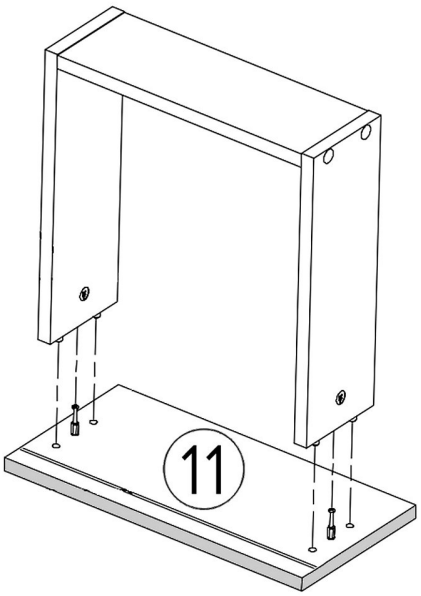

1.

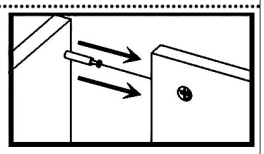

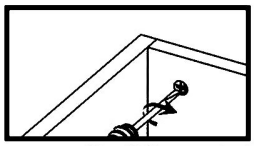

2.

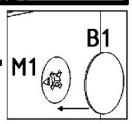

x2

P3

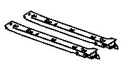

L=350mm x4

S1



3,5x16mm x10

Z1



x8

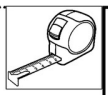

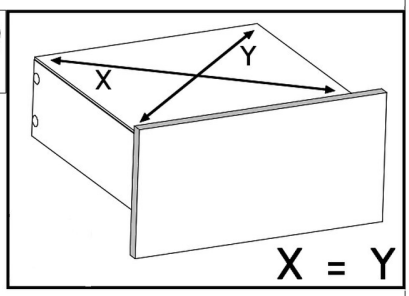

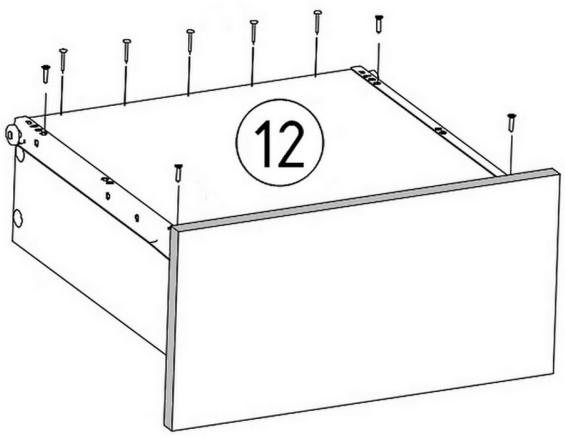

x2

A1	S1
	
ZP x2	3,5x16mm x4

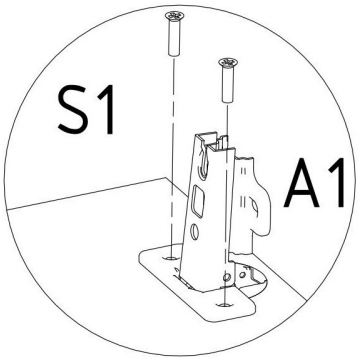

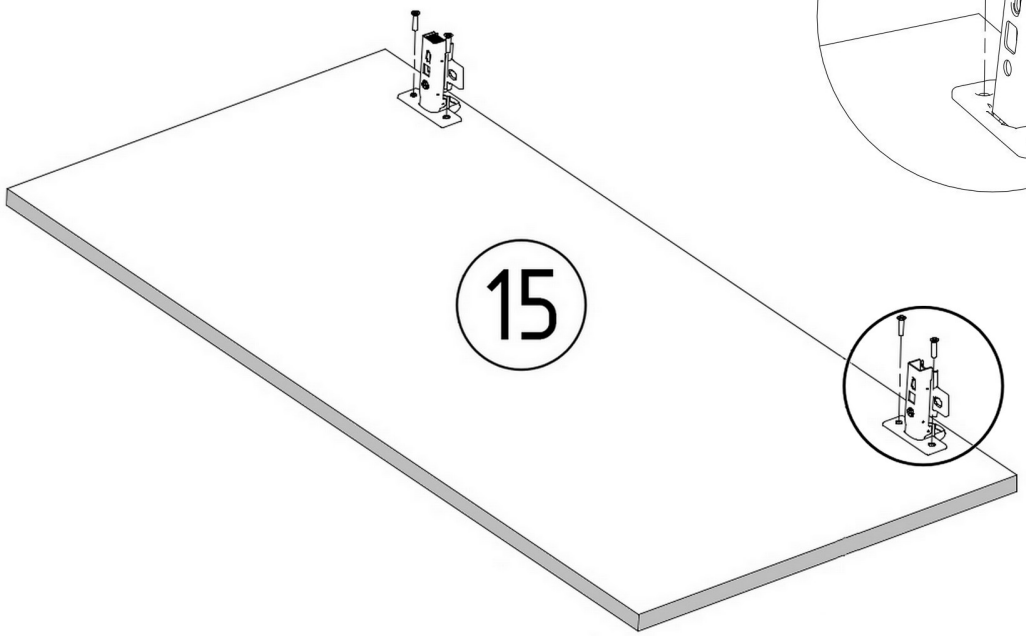

A1	S1
	
ZP x2	3,5x16mm x4

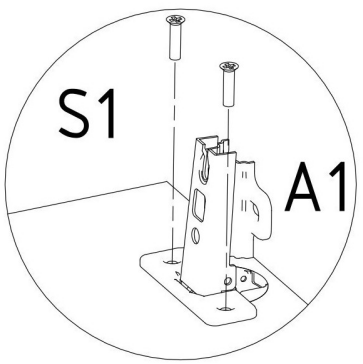

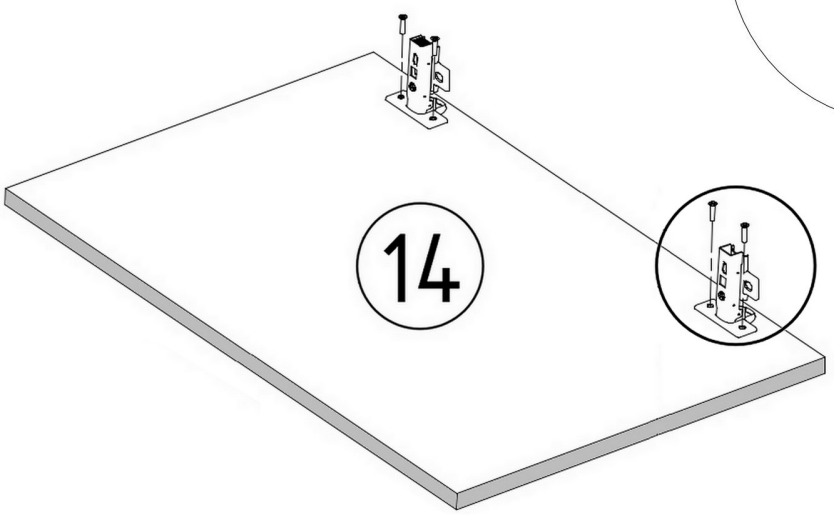

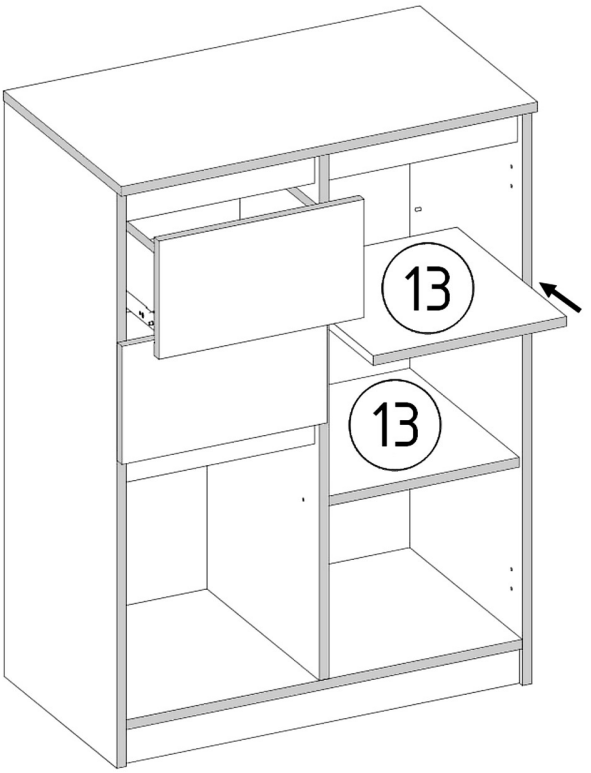
13
13

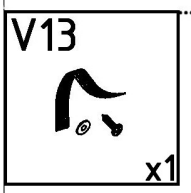
V13
x1

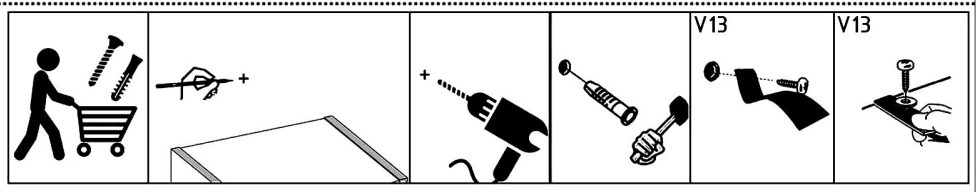
V13
V13

