INSTRUKCJA MONTAŻU

Szafa 150 cm z lustrem, 2 szufladami i ryflowanymi frontami

Kolor: Kaszmir / Dąb Evoke

Kod produktu: OR10140

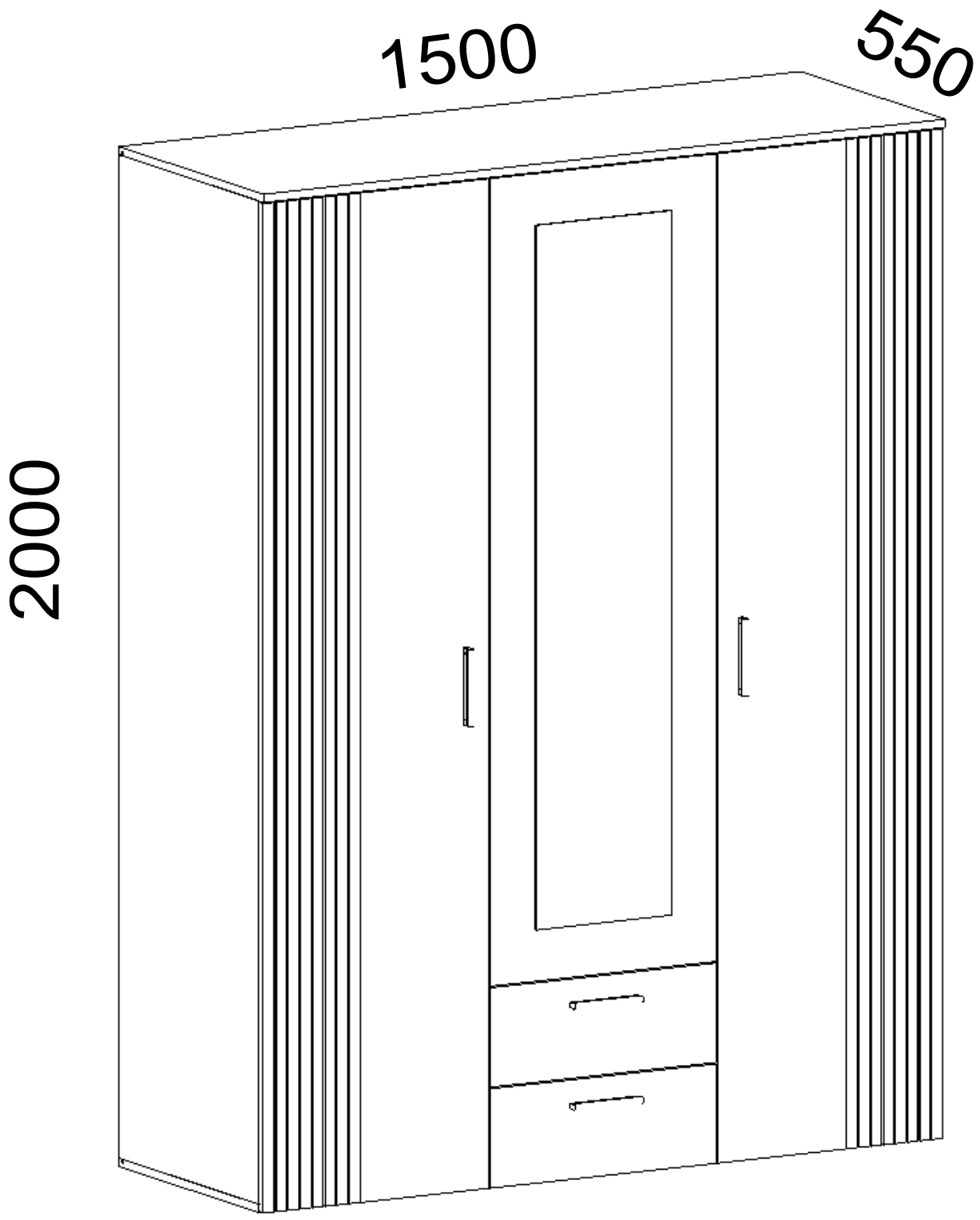

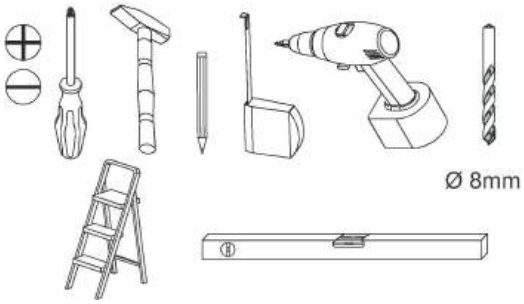





festziehen / tighten / Затегнете / serrer / stringere / utáhnout / vasttrekken / zategnuti / strângere / zwiazac / zacisnąć szorosan meghúzni / pevne dotiahnut´/ trdno pritegniti / затянуть / dra åt

drücken / press / presser / stisknout / Натиснете / vtisniti / nasinac / drukken / pritisnuti / nacisnac / pritisniti / нажать / (meg)nyomni / apăsare / tryck fast / nacisnąć

eindrücken / press in / enfoncer / wcisnąć ribattere / zatlačit / Вкарайте / indrukken benyomni / stlacit´ / vtisniti / tryck in introducere prin apăsare / вдавить

einschlagen / hammer in / beverni / slain frapper au marteau / infossare / Zabit´ / zarazit / Набийте / zabiti / wbić introducere prin bătaie / забить / zatlouct

ausmessen / measure / mesurer / misurare / opmeten / izmeriti / miara / kimérni / izmeriti / măsurare / измерить změřit / Измерете / mät upp / zmierzyć

Drehen - wenden / przekręcić - odwrócić / Keren - omdraaien / Girare - Ruotare / Okrenuti - ubrnuti / Retourner - renverser / Turn over - turn around / Otocte - obratte / Завъртете - обърнете / Obrnite list / Întoarceţi - rotiţi / Vrid runt - vänd / прокрутить - повернуть / otočit - obrátit otočit - obrátit / elforgatni - megfordítani

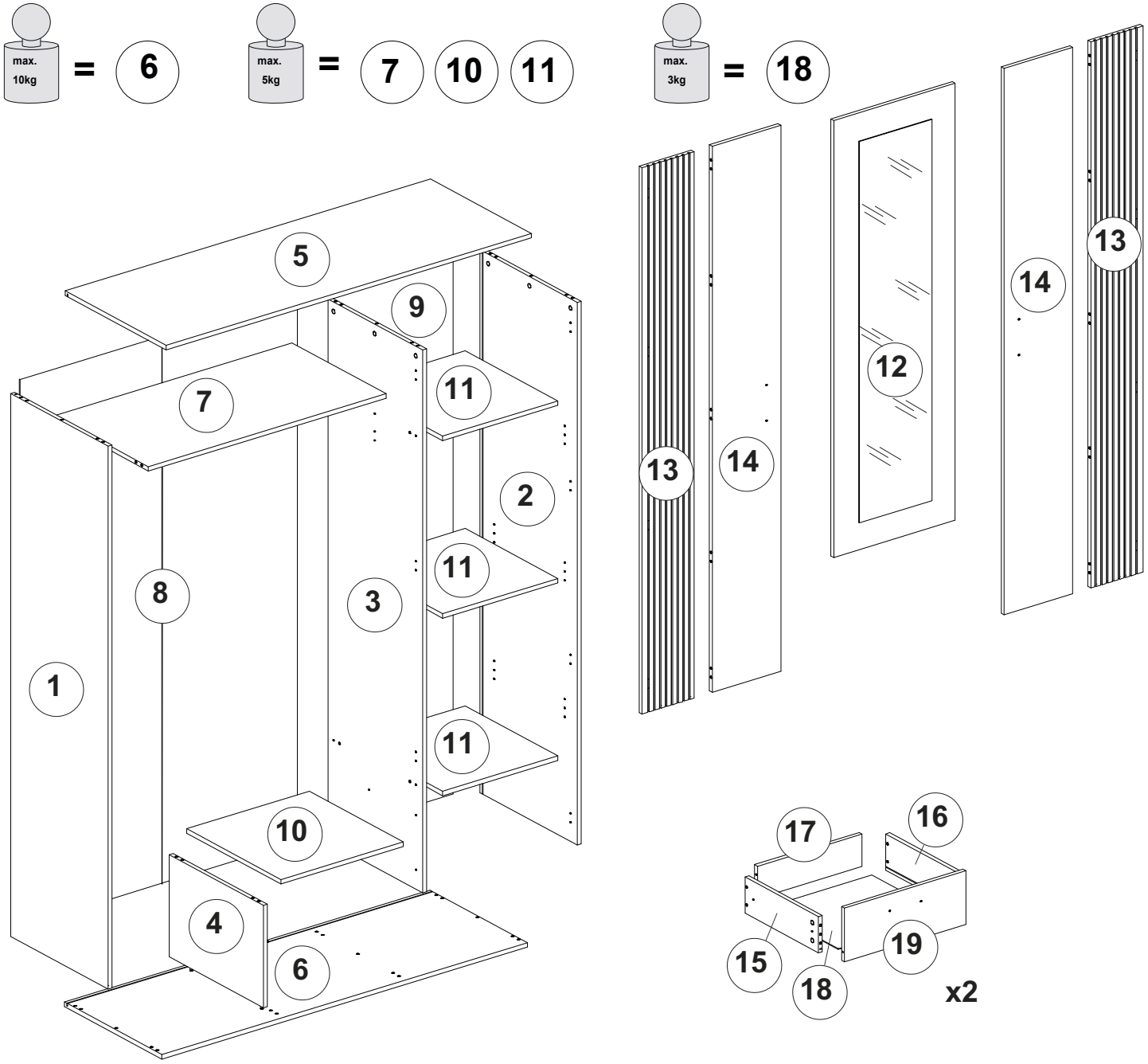

A	B (mm)			C	D
1	1948	530	16	x1	3/4
2	1948	530	16	x1	3/4
3	1948	514	16	x1	4/4
4	367	513	16	x1	1/4
5	1500	550	16	x1	1/4
6	1500	530	16	x1	1/4
7	976	513	16	x1	1/4
8	1964	990	3	x1	3/4
9	1964	490	3	x1	3/4
10	503	513	16	x1	2/4

A	B (mm)			C	D
11	473	505	16	x3	4/4
12	1568	498	19	x1	4/4
13	1960	214	16	x2	2/4
14	1960	282	16	x2	2/4
15	400	130	16	x2	2/4
16	400	130	16	x2	2/4
17	429	116	16	x2	2/4
18	443	404	3	x2	3/4
19	498	193	16	x2	2/4
B1					**1/4**

AVA 150

B1 Colli 1/4

A1 15x12  **x47**	**C2** 44mm 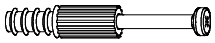 **x27**	**O1** ø18mm 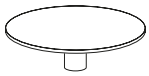 **x27**
O2 ø18mm 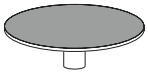 **x16**	**F3** 6,3x50 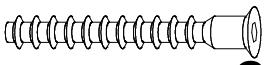 **x20**	**FA1** 4mm 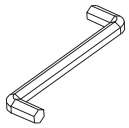 **x1**
B2 8x30  **x26**	**K6** ø35mm 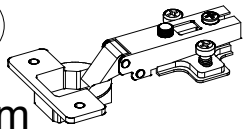 **x8**	**J65** 128/148  **x4**
M1 10x10x15 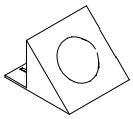 **x22**	**R5** ø6mm 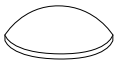 **x6**	**N1** ø6mm 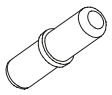 **x12**
P18 45x25 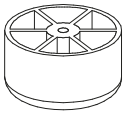 **x6**	**Y37** 8x50  **x2**	**DB2** 4x25  **x8**
DA21 3,5x16 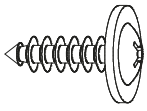 **x16**	**D25** 4x25 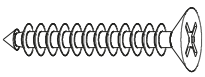 **x6**	**K7** ø35mm 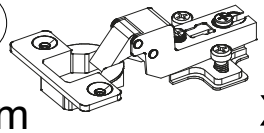 **x3**
D10 3x16 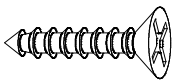 **x35**	**D11** 3,5x16 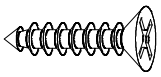 **x26**	**Y36** 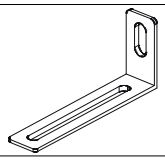 **x2**
B4 8x50  **x10**	**C3** 68 mm  **x10**	**Y35** 5x50 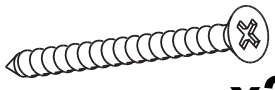 **x2**
L4 400mm 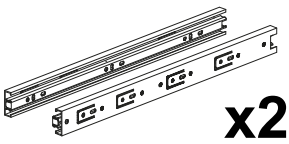 **x2**	**E6** 5x13 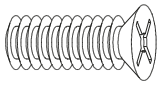 **x12**	**S4** 20x10x2mm 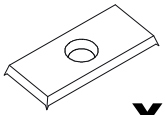 **x5**
Q1 30x15mm 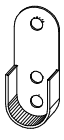 **x2**	**Q2** 970x23x15mm 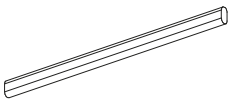 **x1**	

I

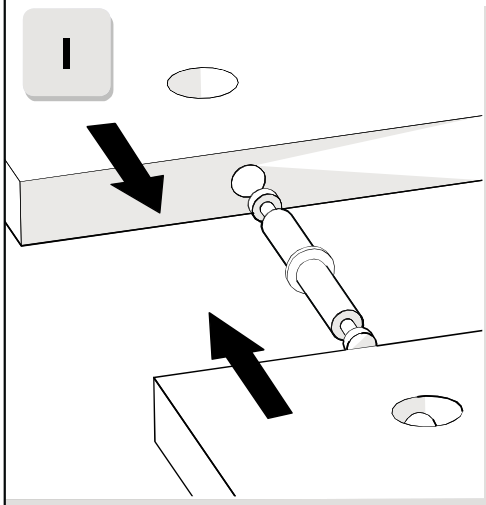

II

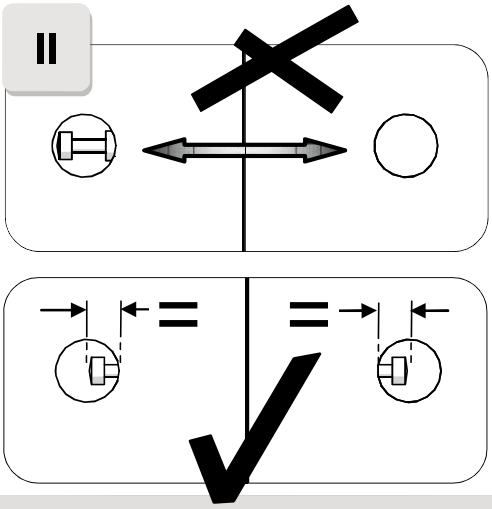

III

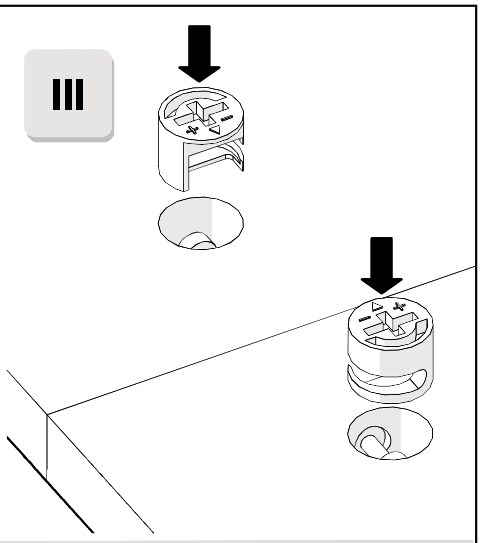

IV

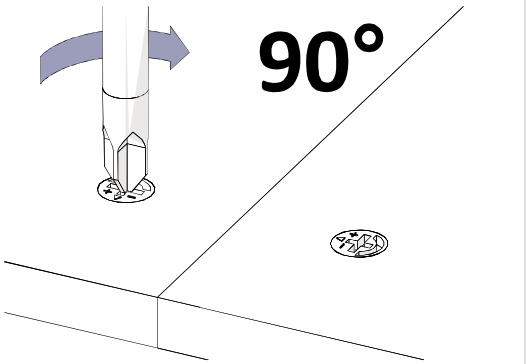

V

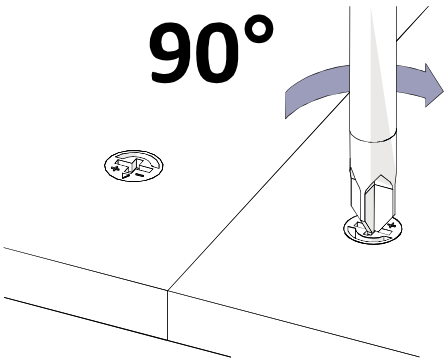

VI

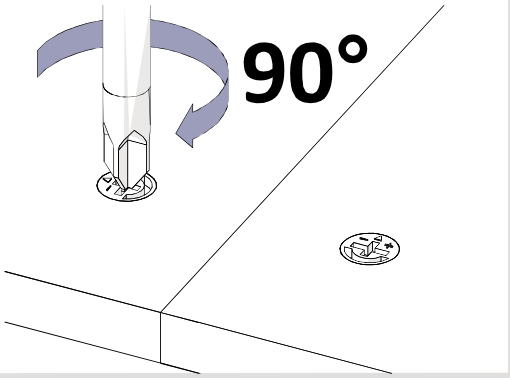

VII

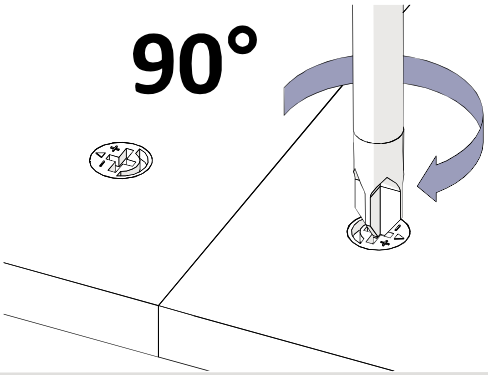

VIII

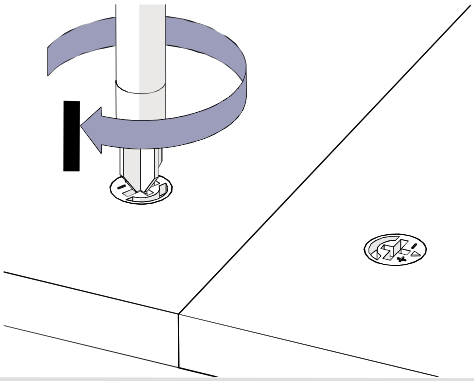

IX

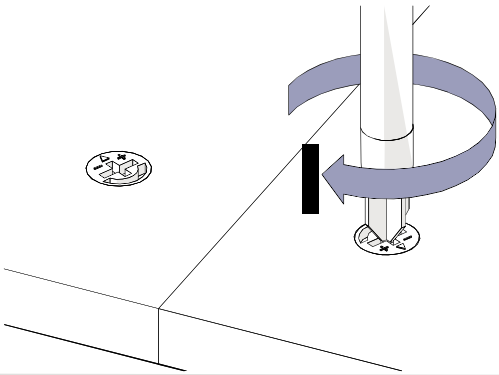

X

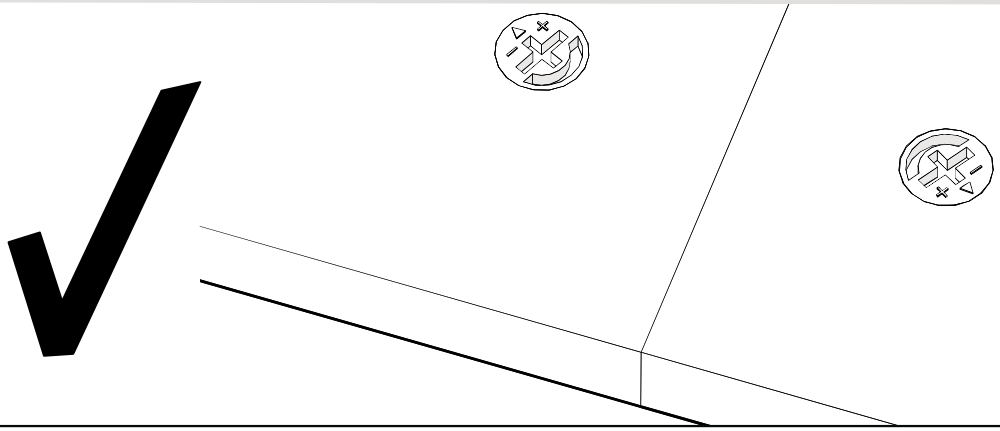

1

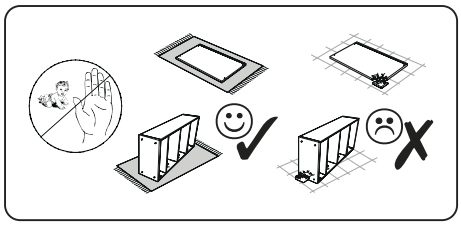

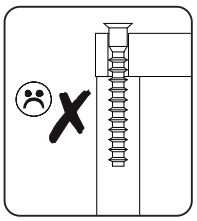

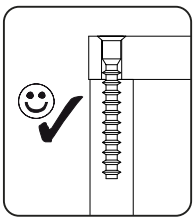

A1	15x12	x8
C2	44mm	x8
B2	8x30	x4
F3	6,3x50	x8
FA1	4mm	x1
DB2	4x25	x4
J65	128/148	x2
O1	ø18mm	x8

A

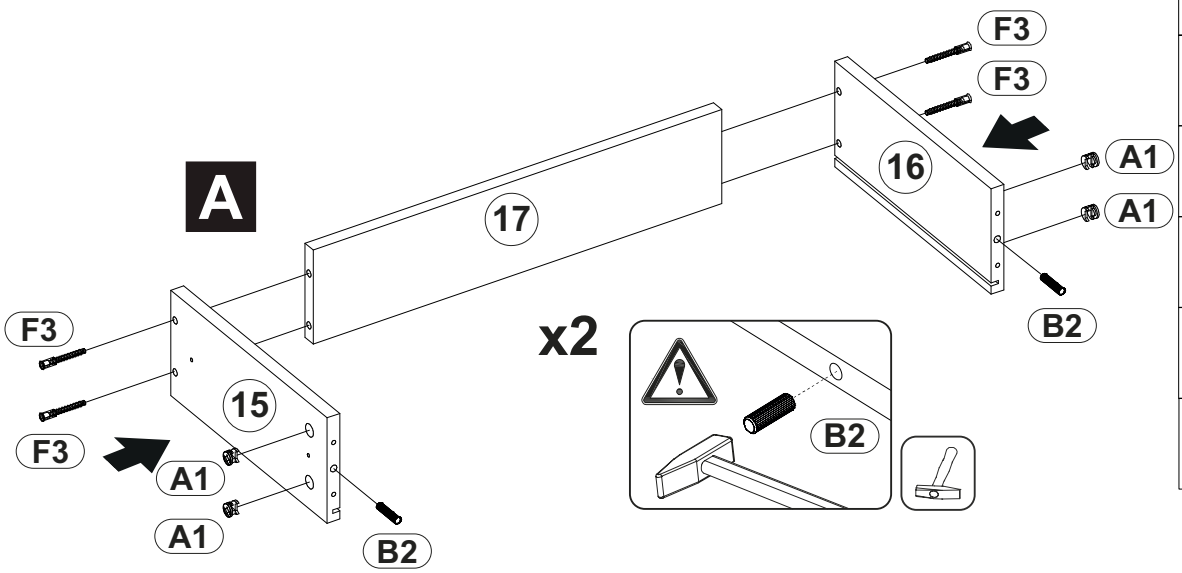

B

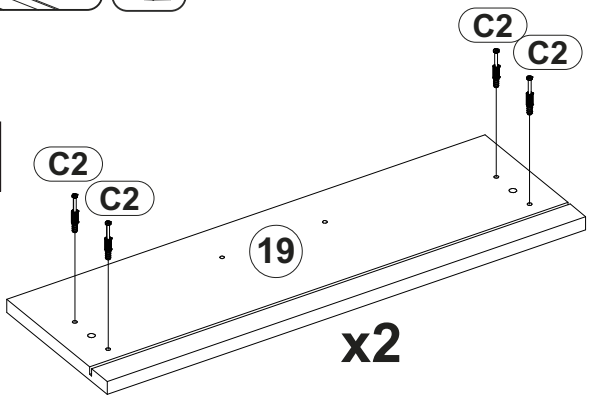

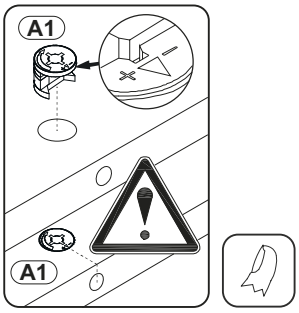

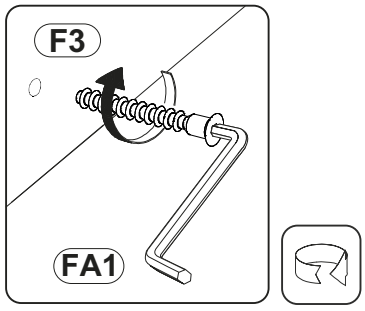

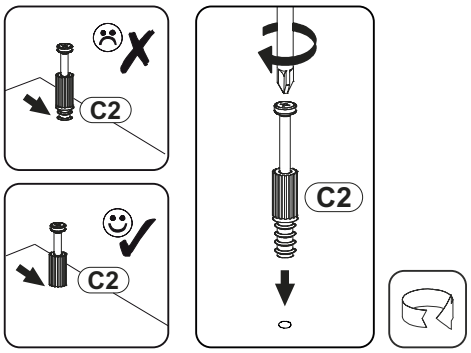

C

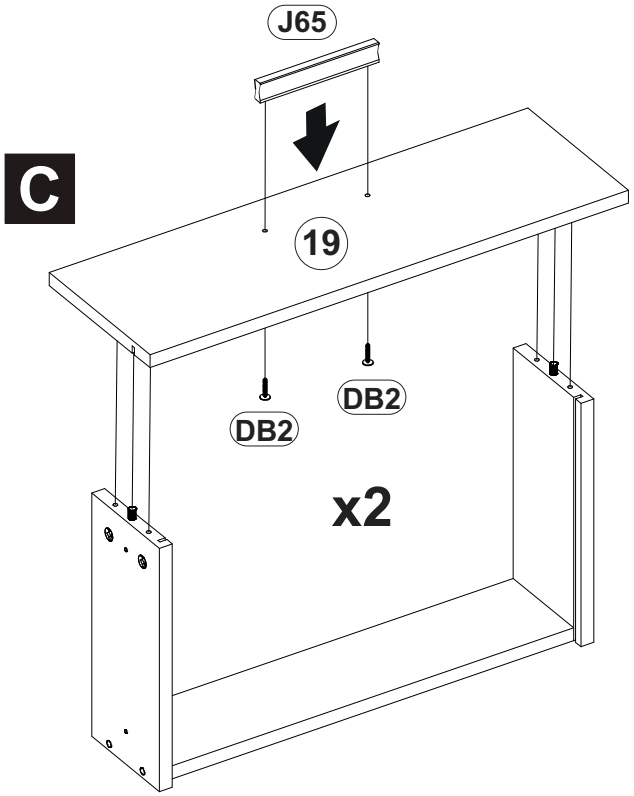

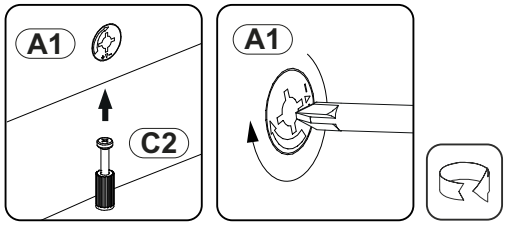

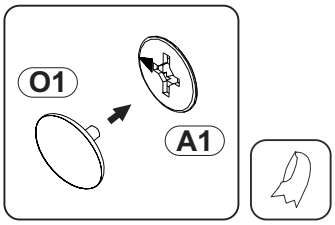

2

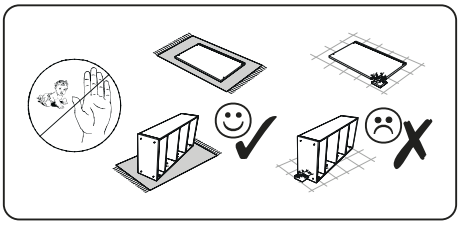

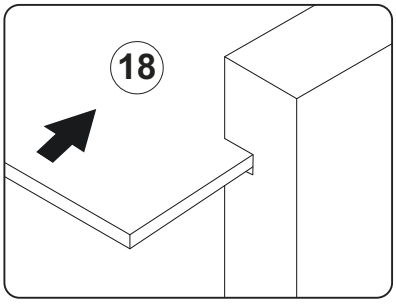



L4	400mm	x2
DA21	3,5x16	x8
D10	3x16	x8

D

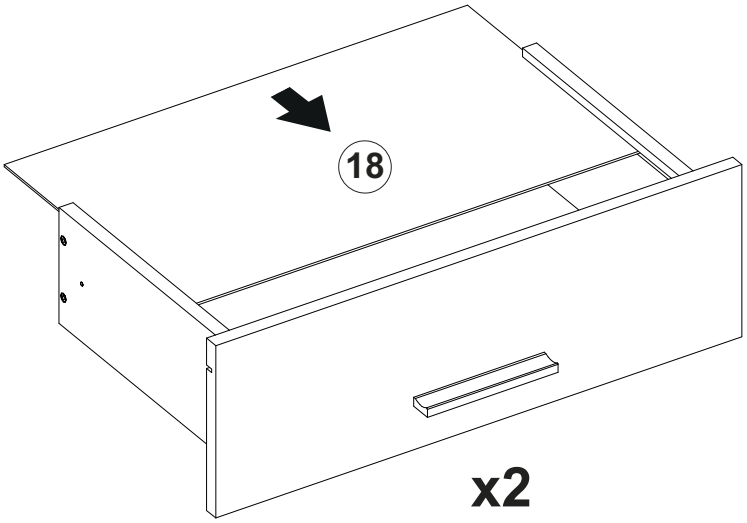

x2



A=B

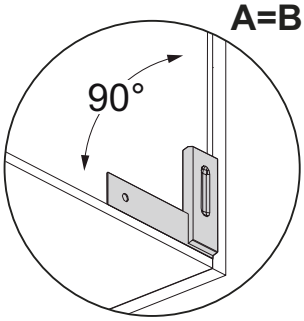

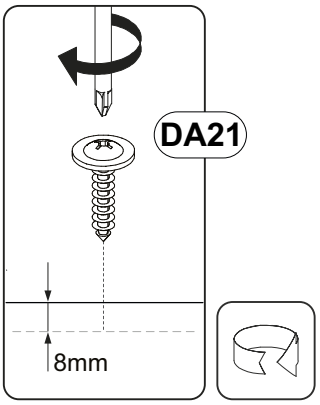

E

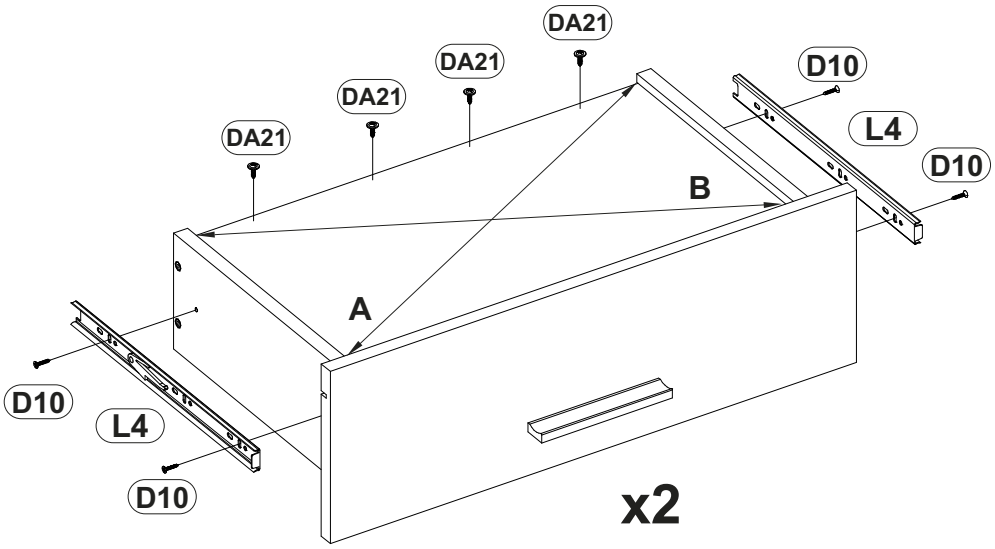

x2

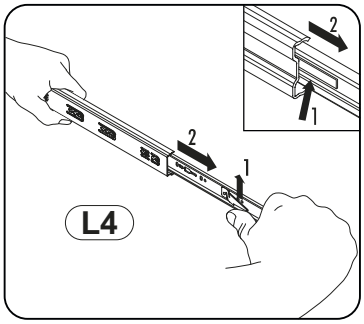



3

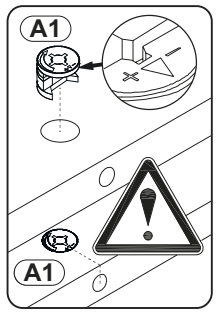

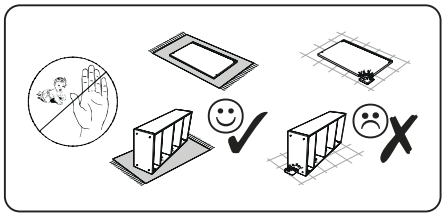

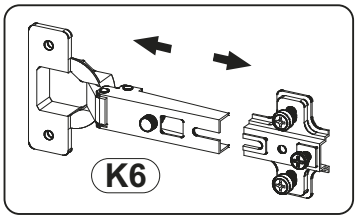

A1	15x12	x6
C2	44mm	x3
B2	8x30	x8
N1	ø6mm	x6
K6	ø35mm	x8
E6	5x13	x2
Q1	30x15mm	x1

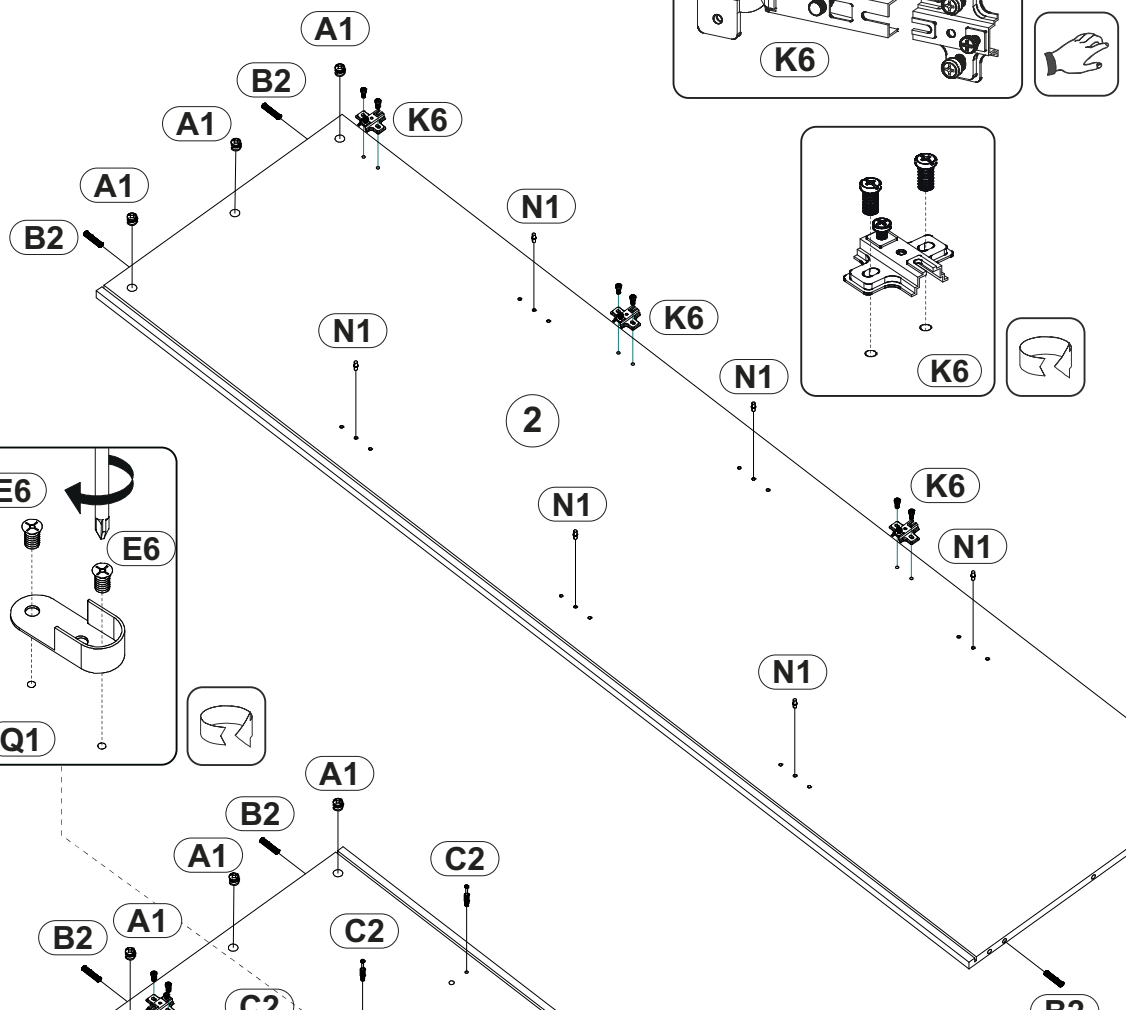

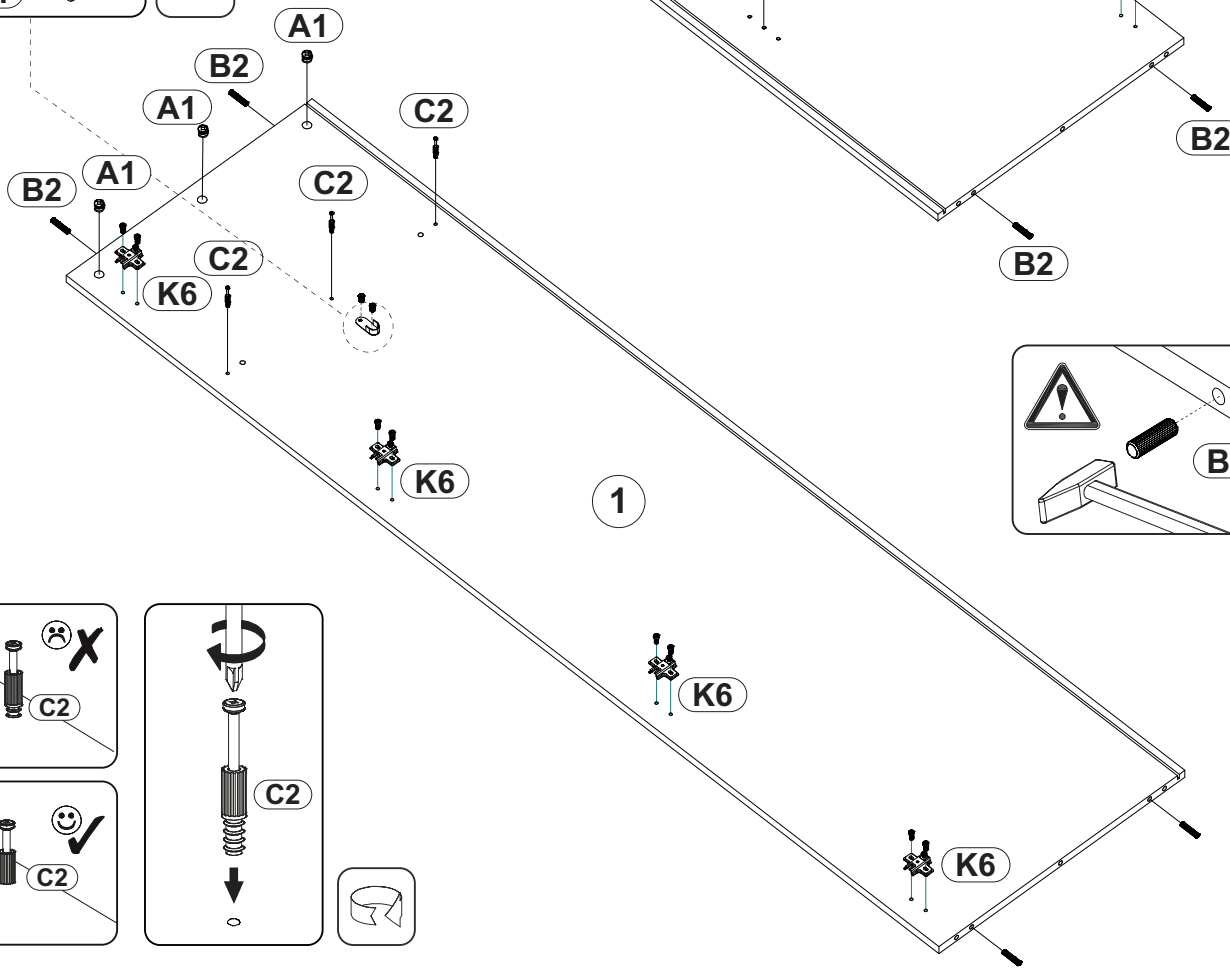

4

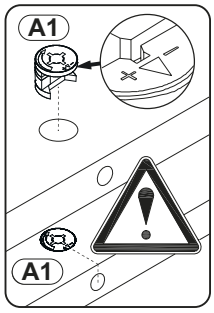

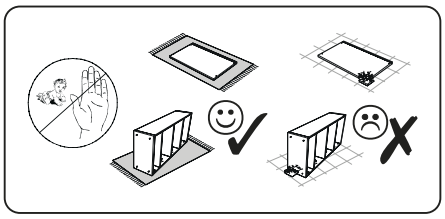

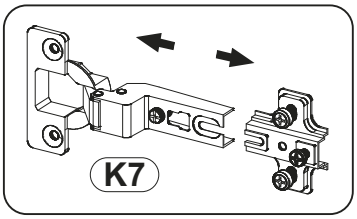



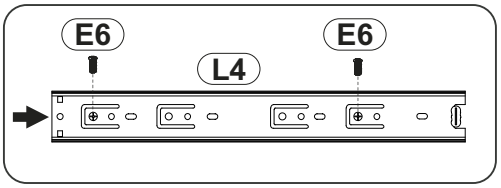

A1	15x12	x3
C2	44mm	x5
B2	8x30	x4
N1	ø6mm	x6
K7	ø35mm	x3
E6	5x13	x6
Q1	30x15mm	x1
L4	400mm	x2

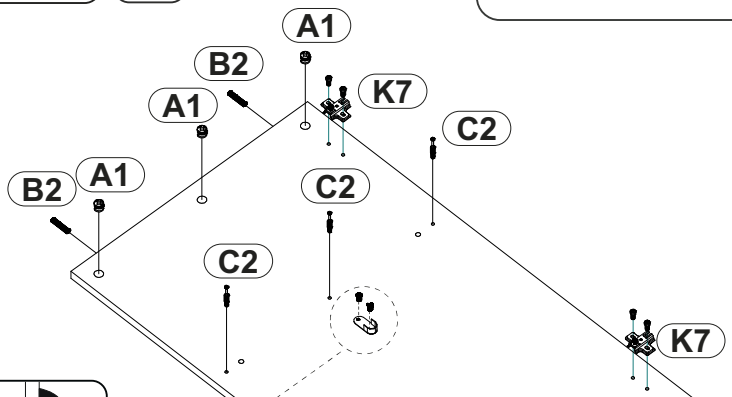

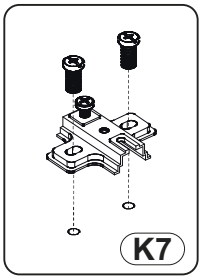

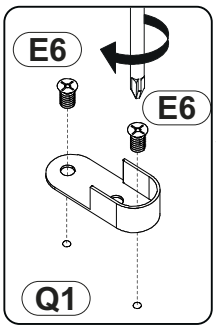

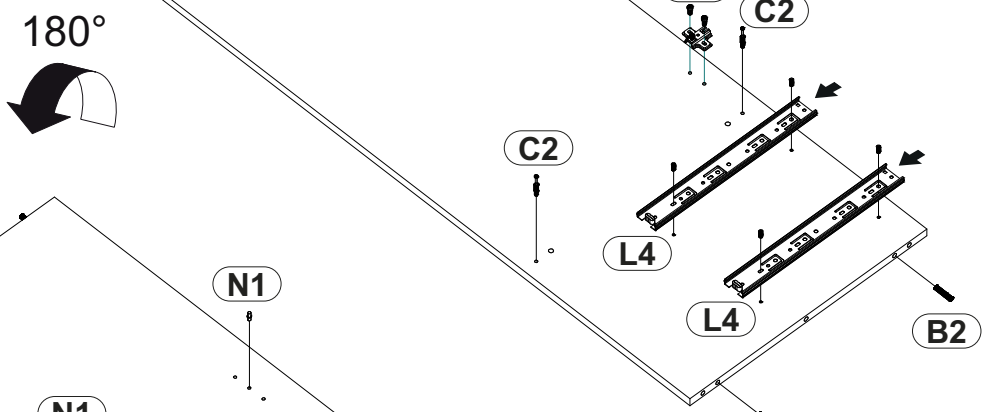

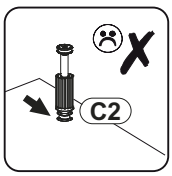



5

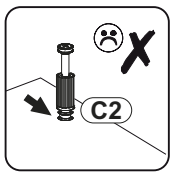



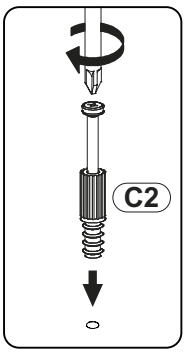



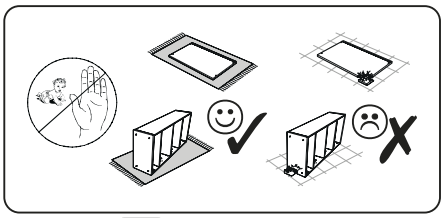

A1	15x12	x10
C2	44mm	x11
B2	8x30	x10
E6	5x13	x4
L4	400mm	x2

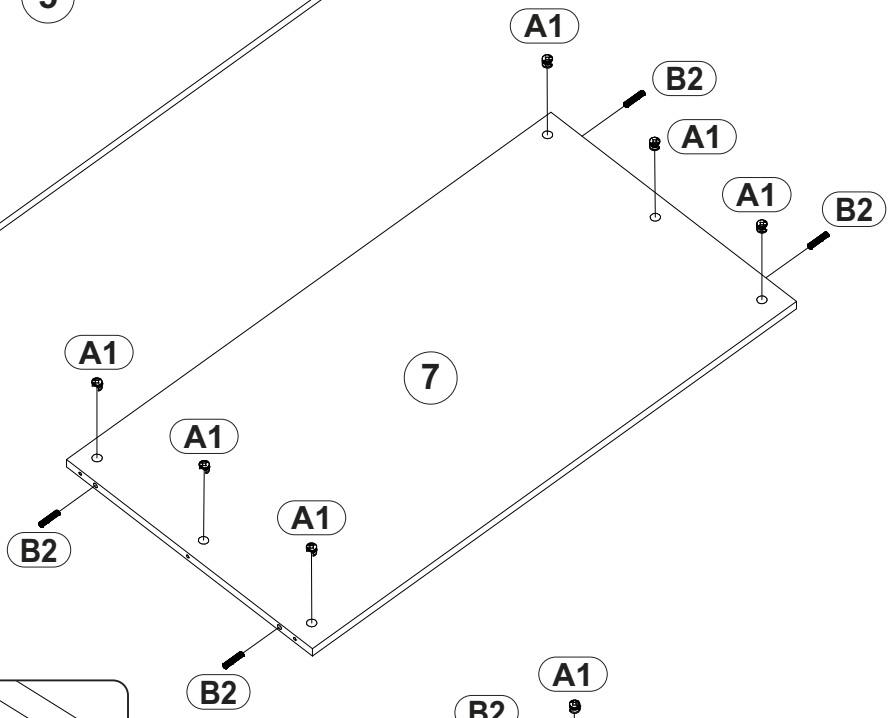

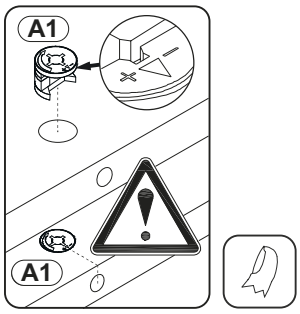

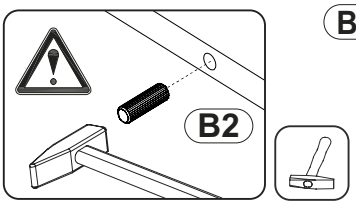

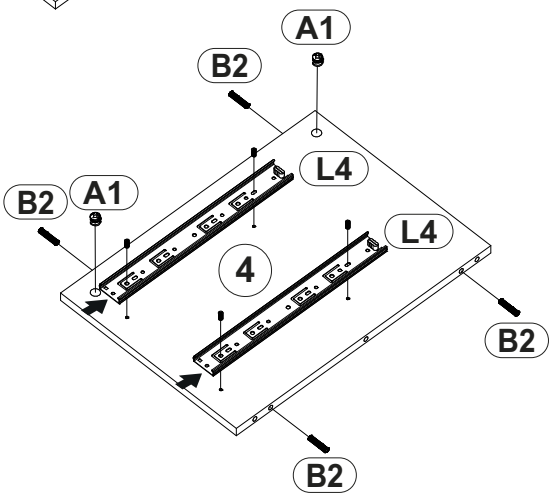

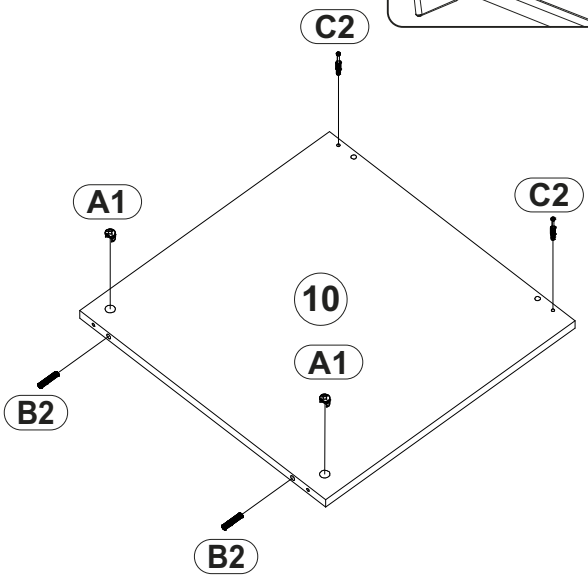



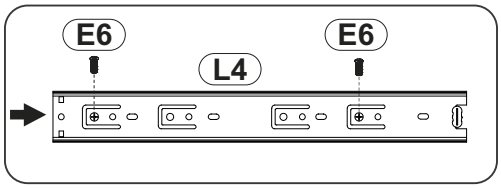



6

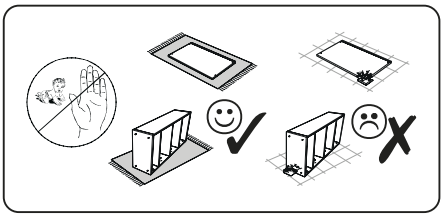

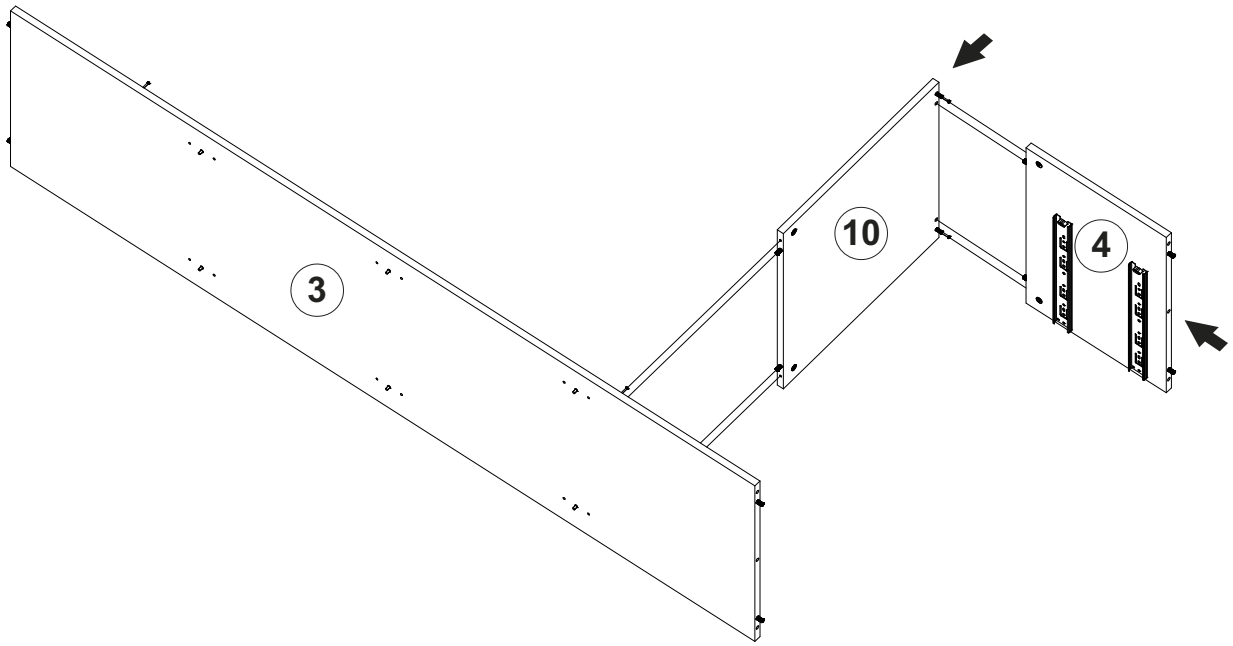

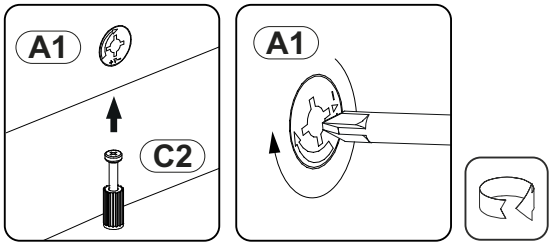

7

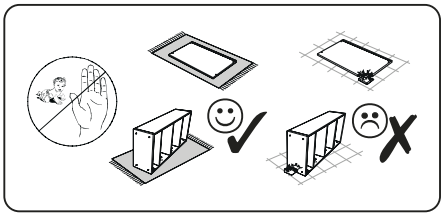

O2
ø18mm
x6

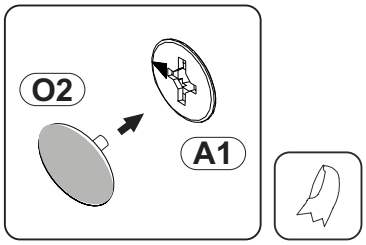

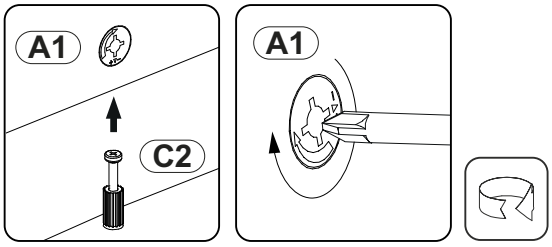

8

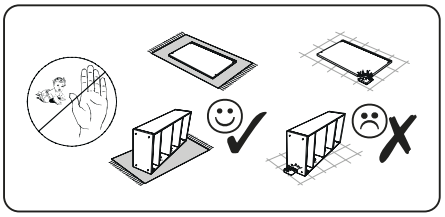

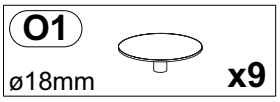

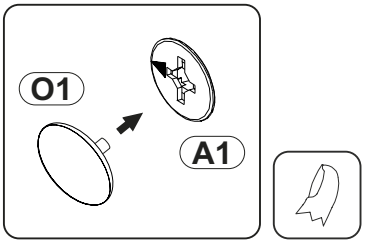

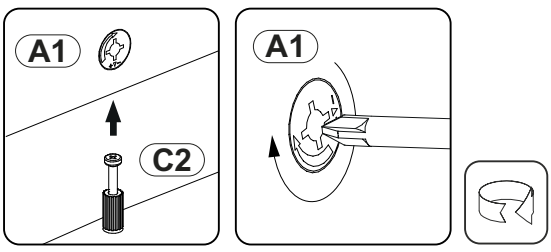

9

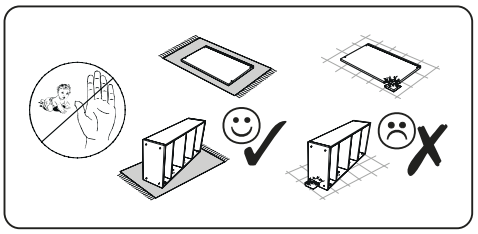

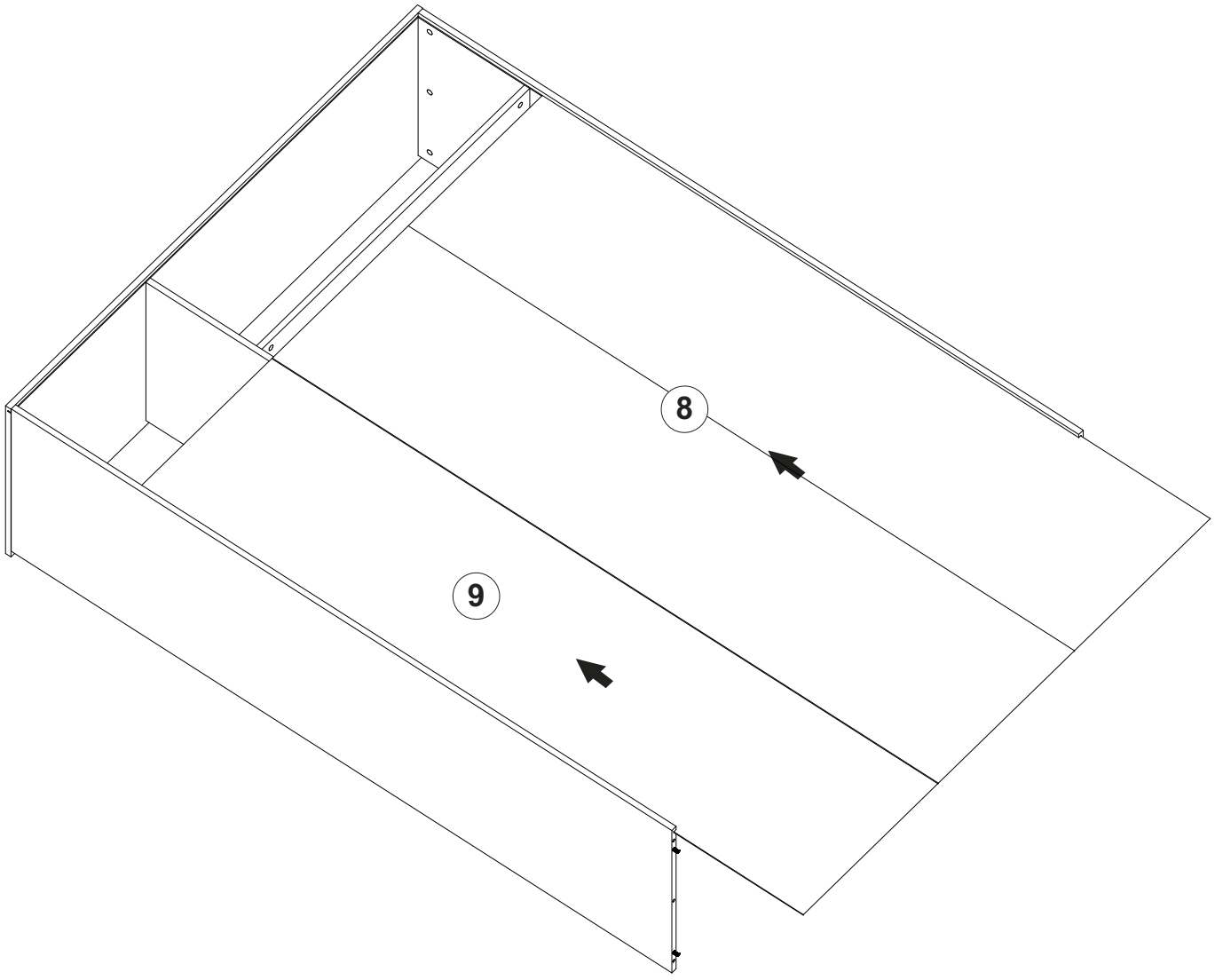

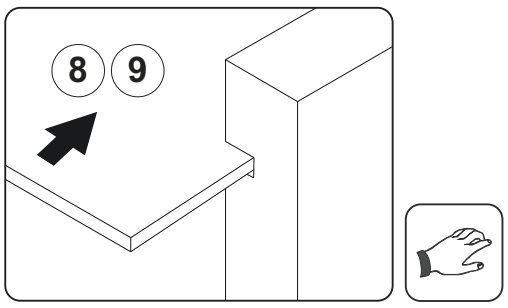

10

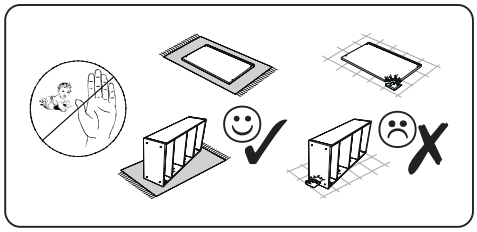

F3	6,3x50	x12
FA1	4mm	x1

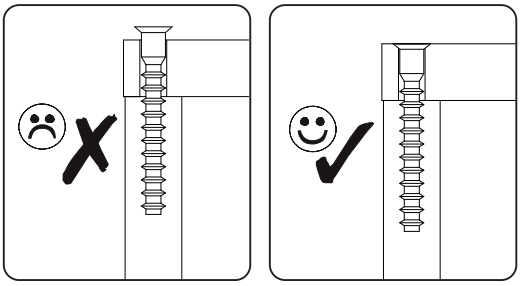

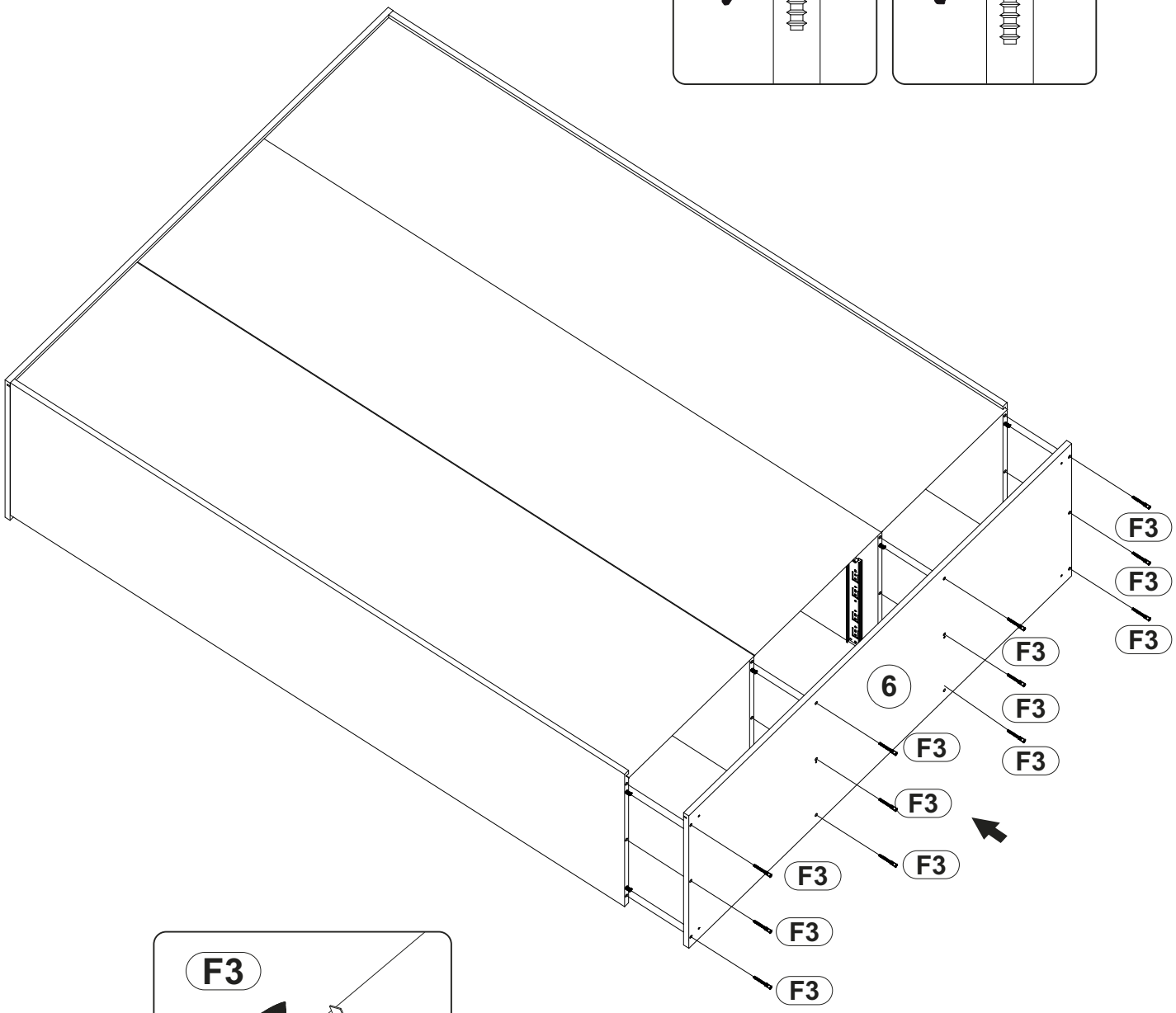

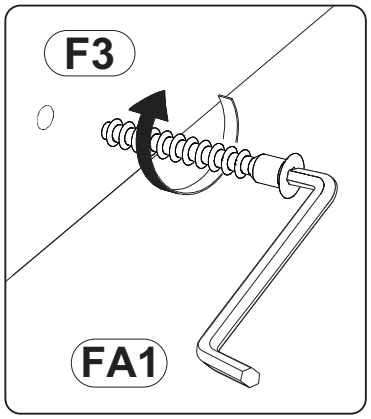



11

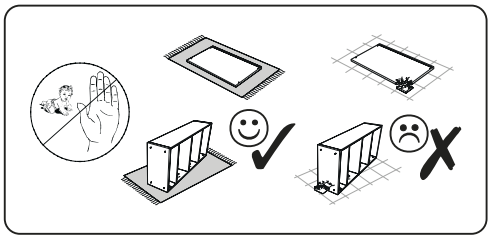

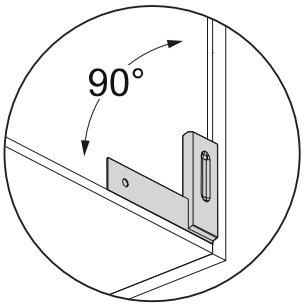



P18	45x25	x6
D25	4x25	x6
M1	10x10x15	x22
DA21	3,5x16	x8
S4	20x10x2mm	x5
D10	3x16	x27



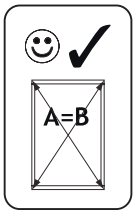

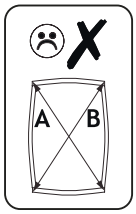

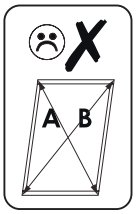

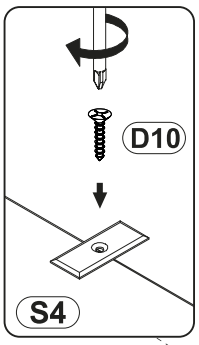

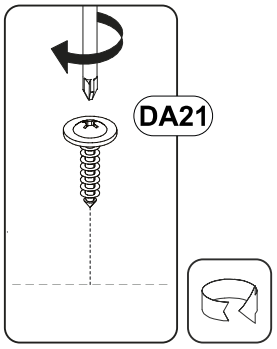

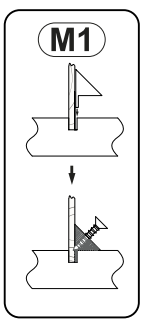

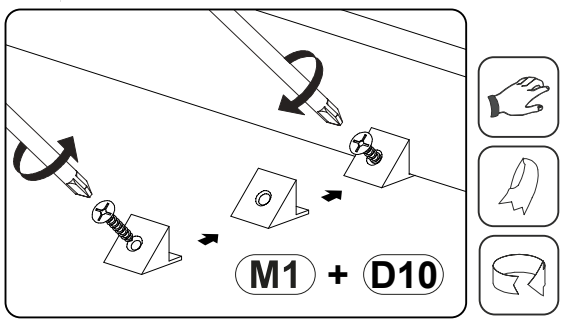

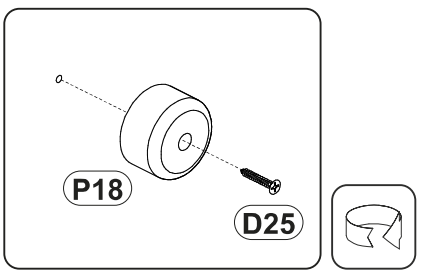

12



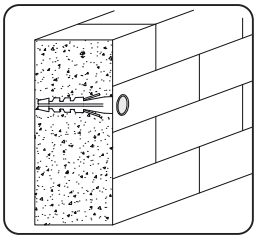

Y36	x2	Y37 8x50	x2
D11 3,5x16	x4	Y35 5x50	x2

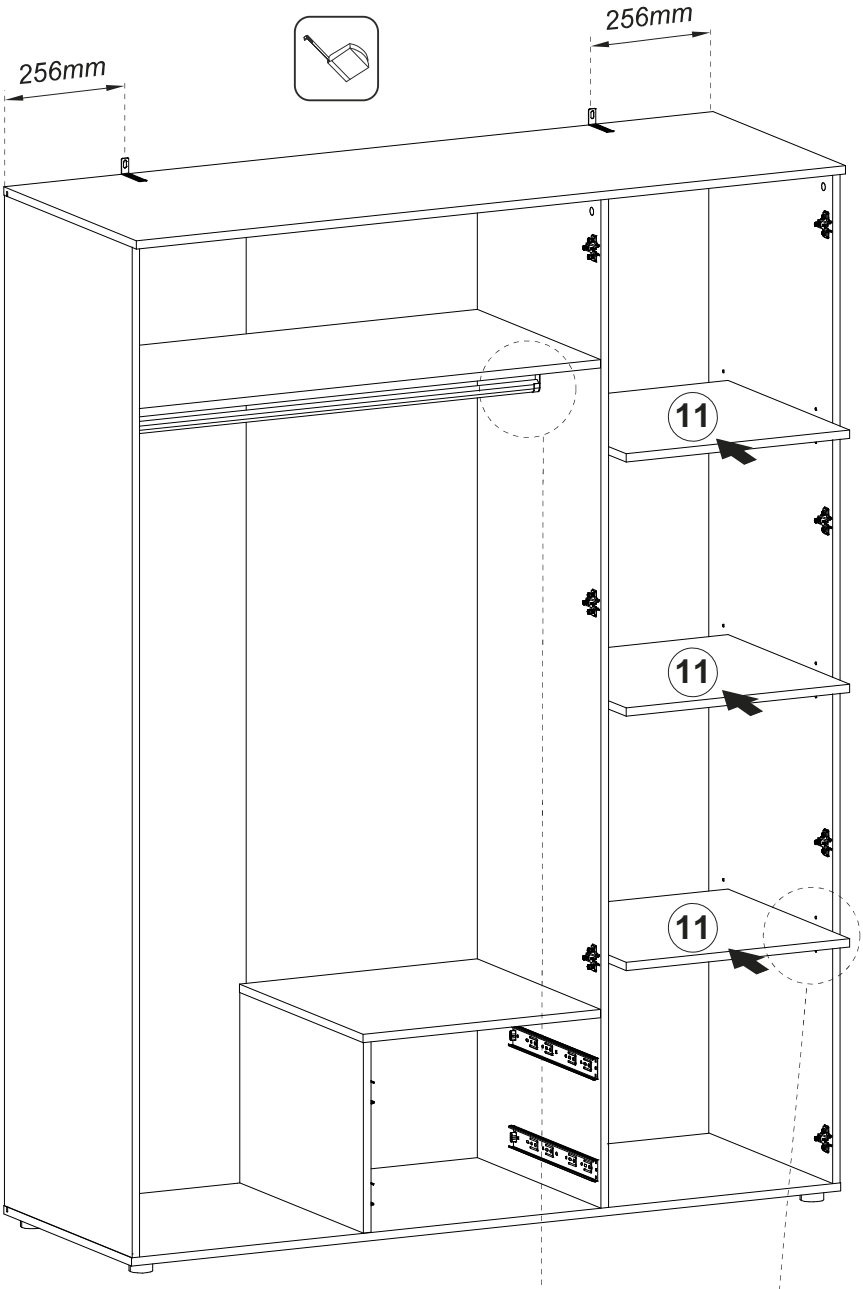



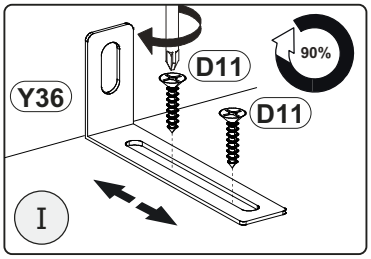

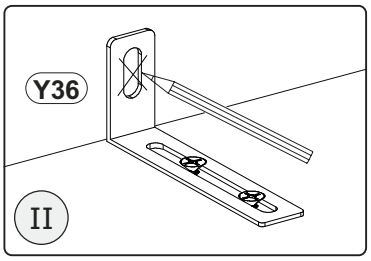

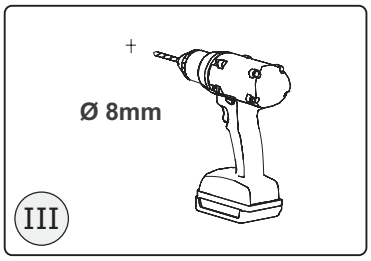

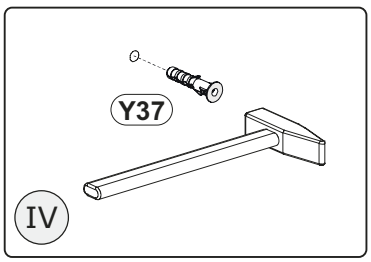

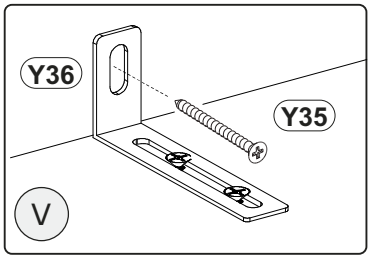

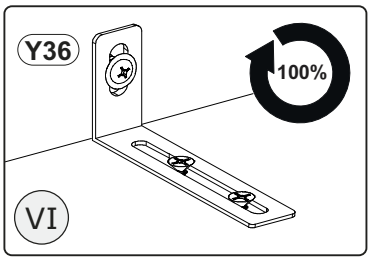

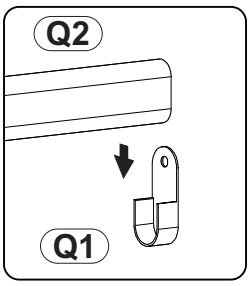



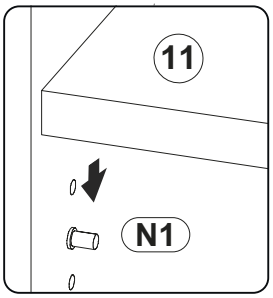



13

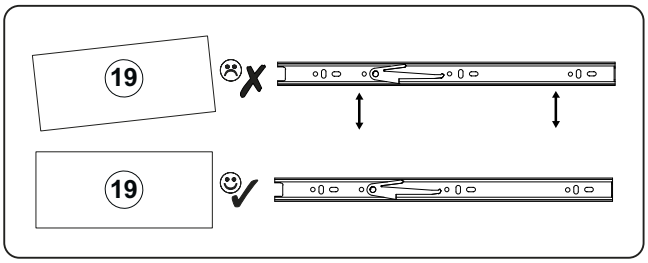

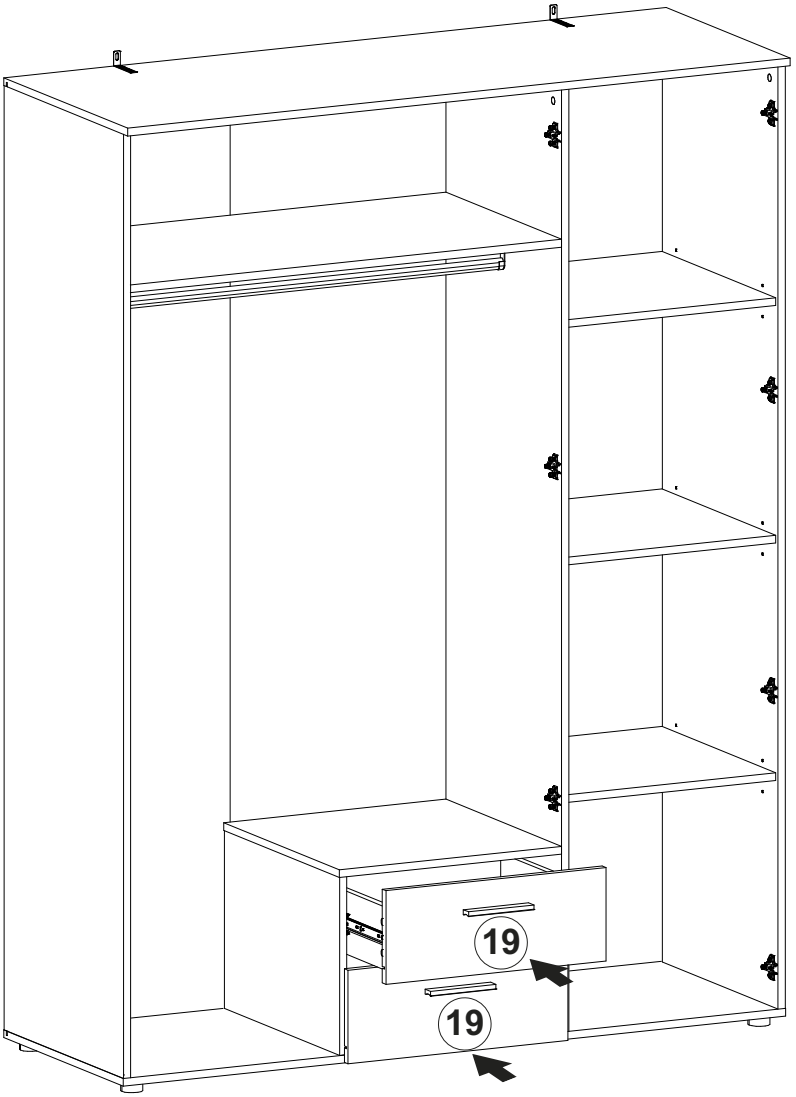

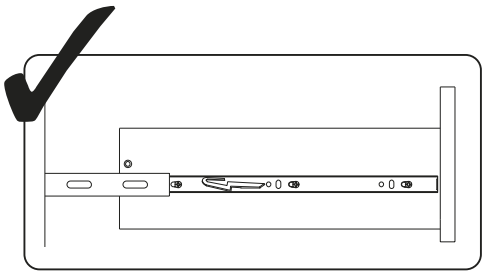

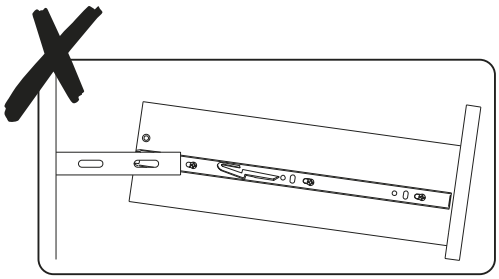

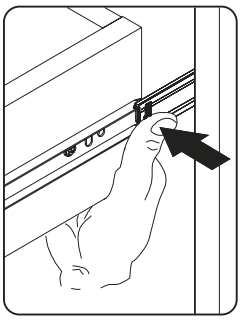

14

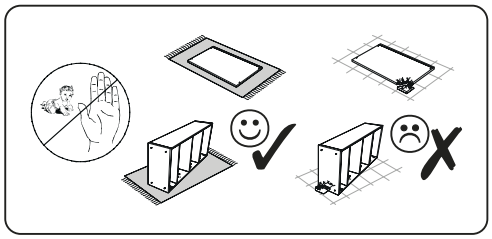

A1	15x12	x20
C3	68 mm	x10
B4	8x50	x10
O1	ø18mm	x10
O2	ø18mm	x10

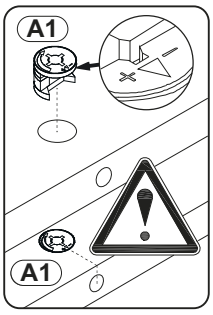

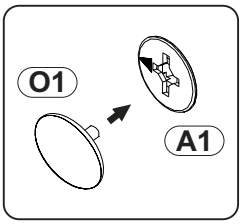

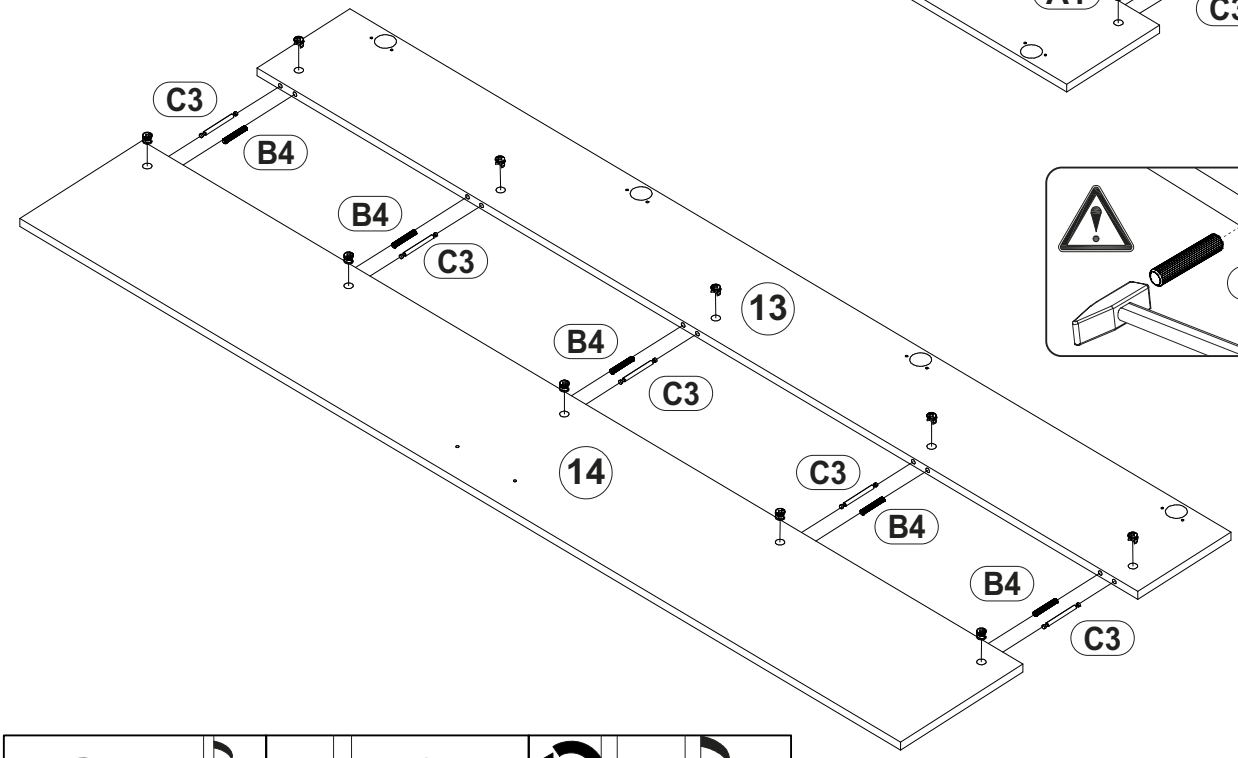

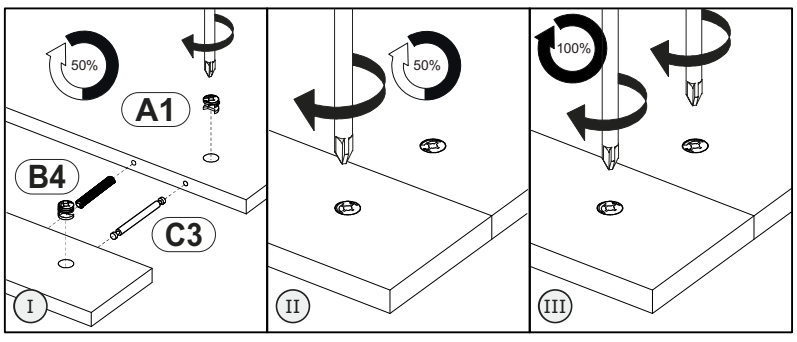

15

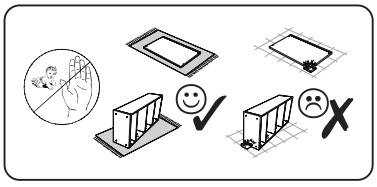

K6	ø35mm	x8
D11	3,5x16	x16
DB2	4x25	x4
R5	ø6mm	x4
J65	128/148	x2

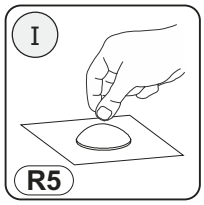

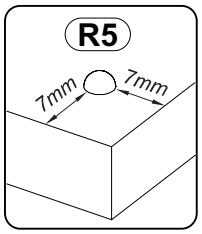

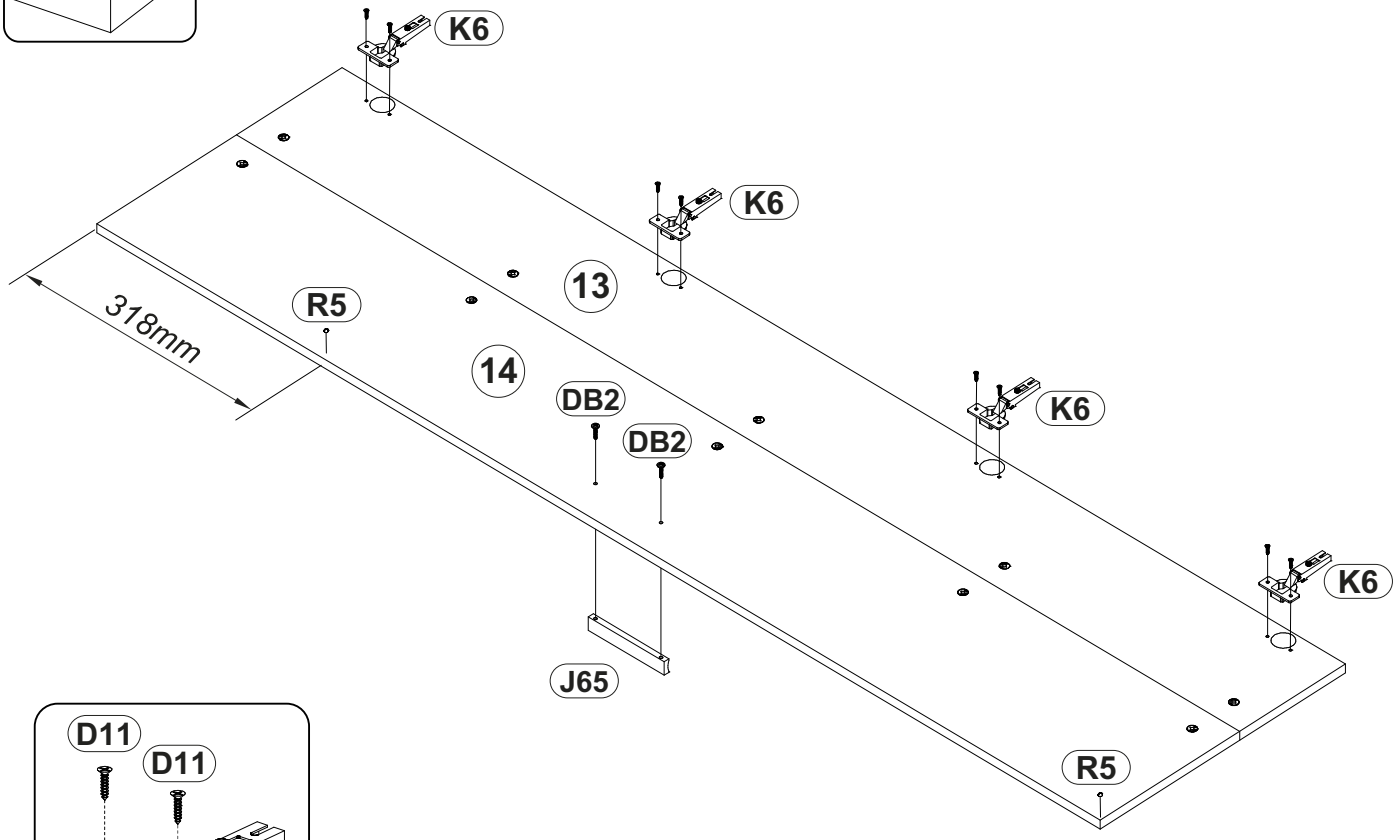

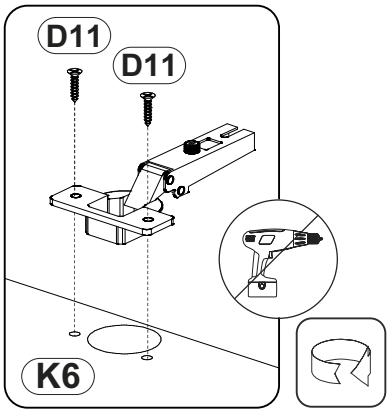

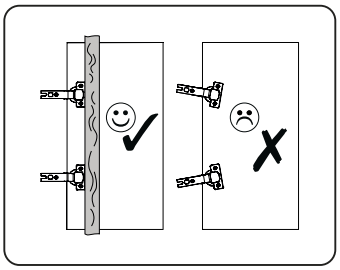

16

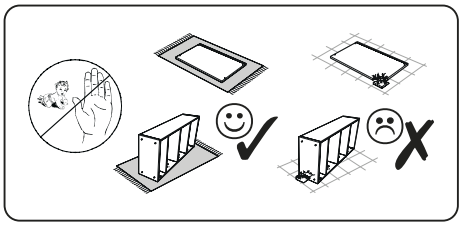

K7 ø35mm x3

D11 3,5x16 x6

R5 ø6mm x2

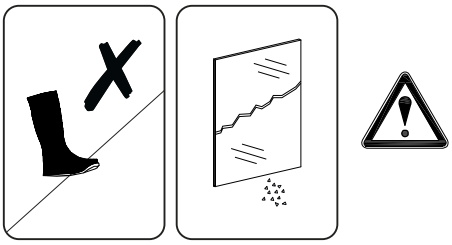

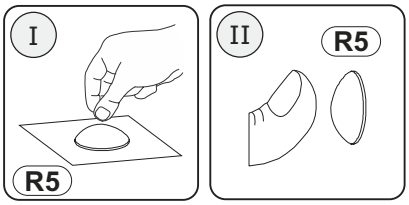

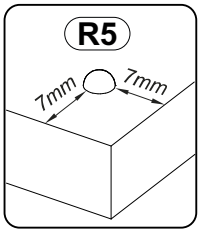

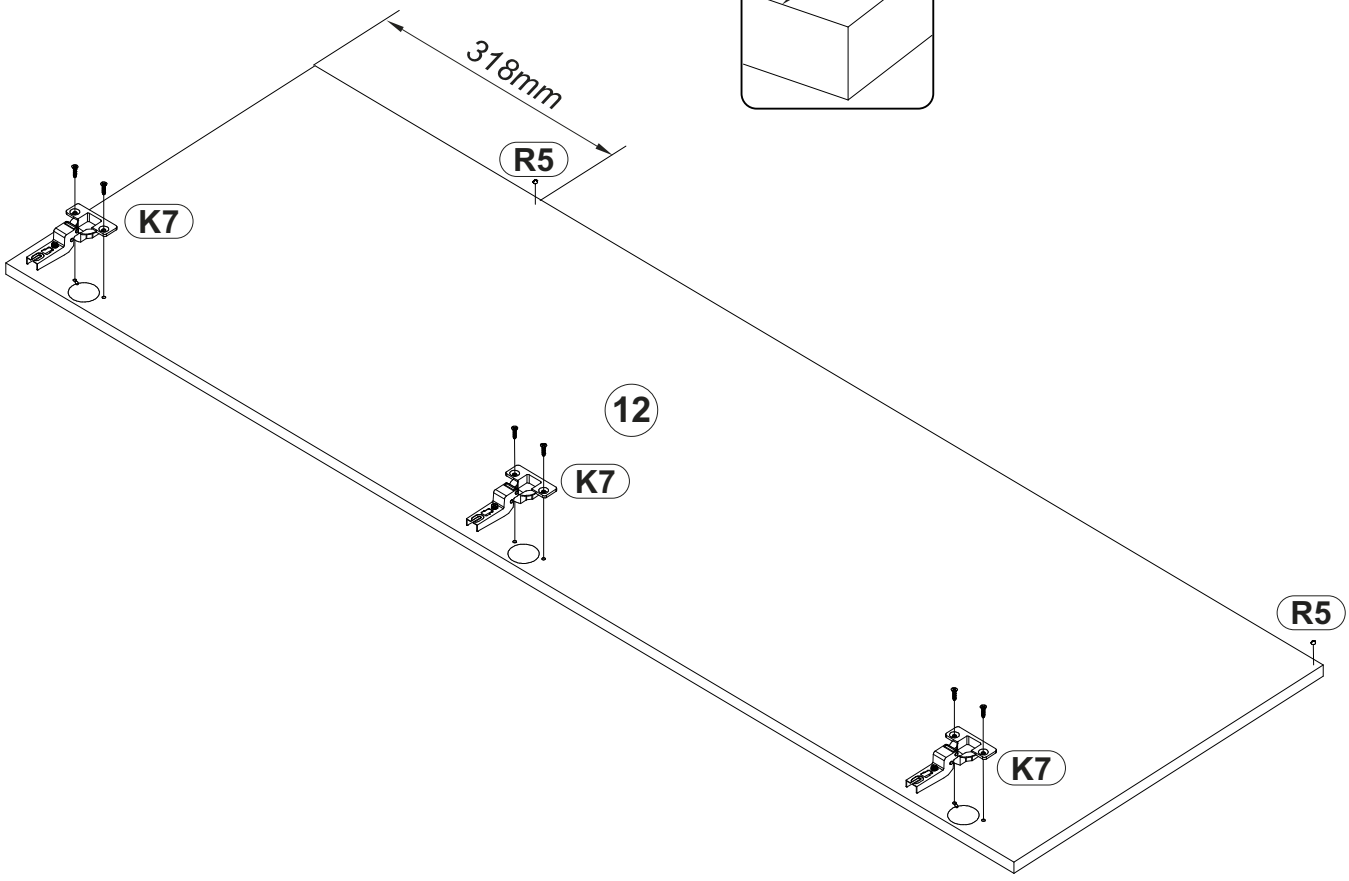

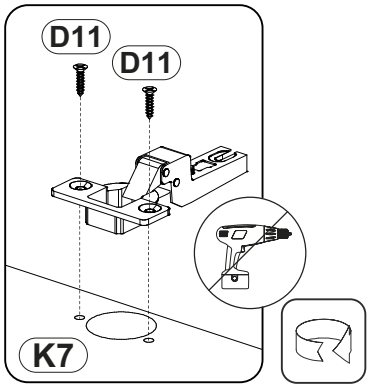

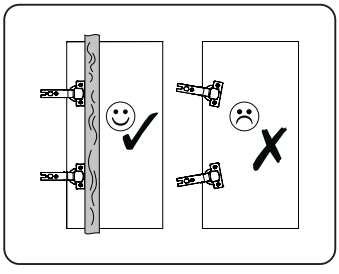

17

