INSTRUKCJA MONTAŻU

Regał na książki 60 cm, 182 cm

Kolor: Dąb Artisan, czarne obrzeża

Kod produktu: OR10431

R_40

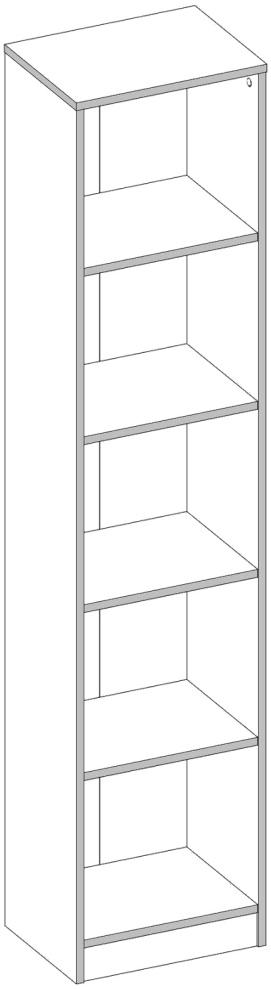

R_60

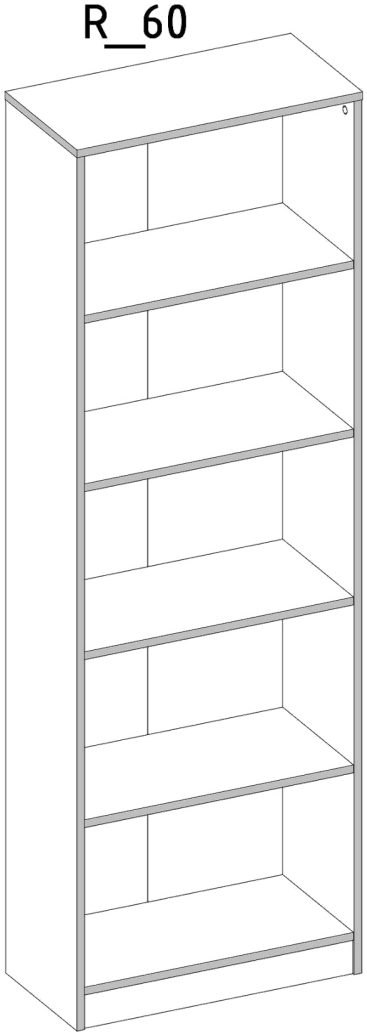

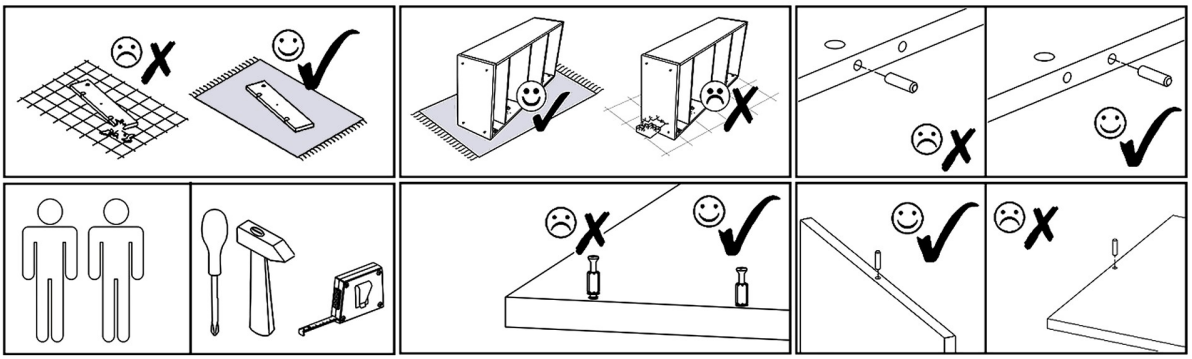

B1 B ø17/4mm x4	B1 S/A ø17/4mm x4	B1 CZ ø17/4mm x4	B1 Ant ø17/4mm x4	B1 K ø17/4mm x4				
M1 12x15mm x12	N1 L=35mm x12	E1 8x30mm x16	Z1 x50	V16 5x16mm x12	T1 x4	V32 L=1712mm x1	V13 x1	

IM250507

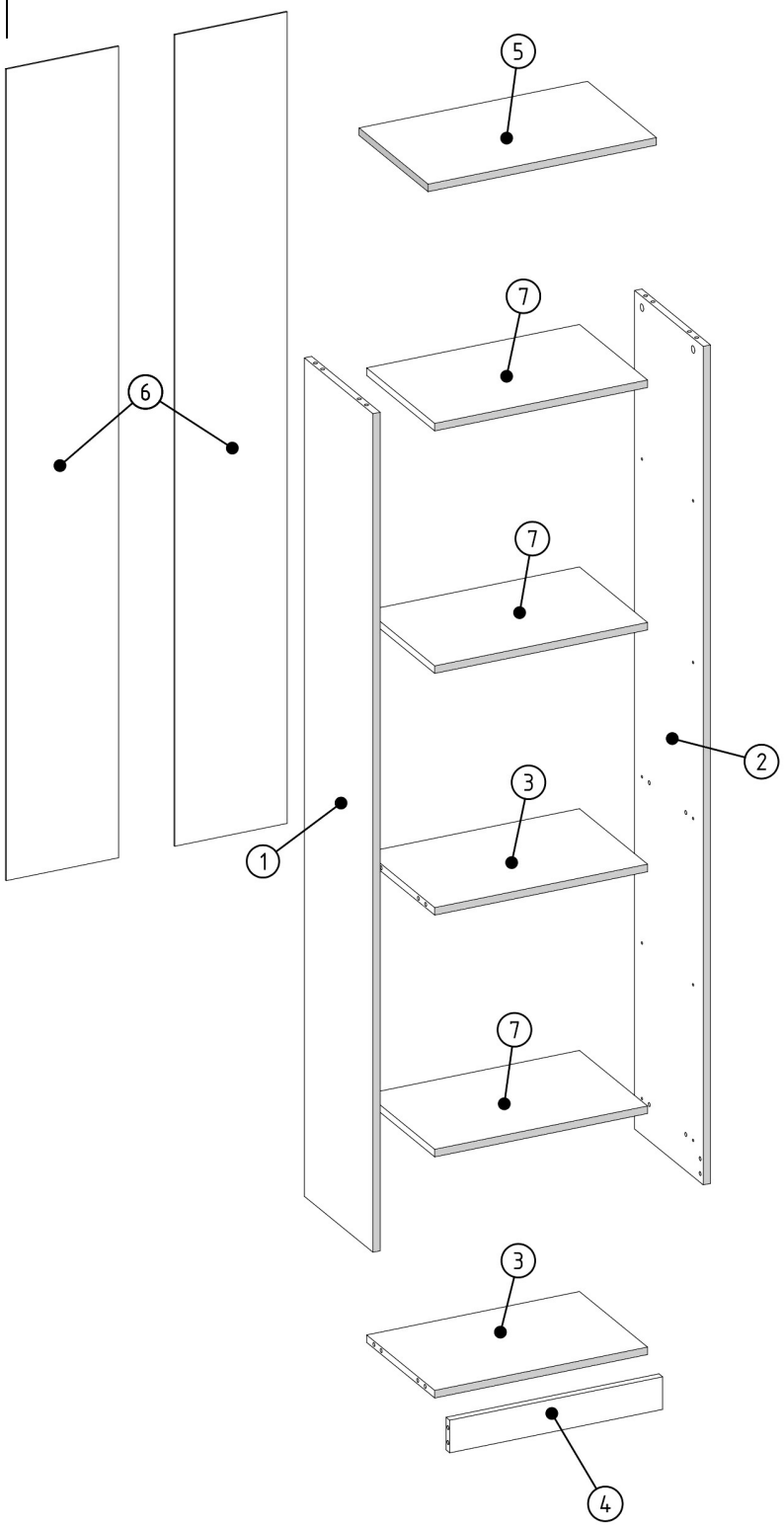

R40

ID	NUMBER	QUANTITY
000510	7	3
000509	6	2
001742	5	1
001744	4	1
001743	3	2
000513	2	1
000512	1	1

R60

ID	NUMBER	QUANTITY
000522	7	3
000521	6	2
001745	5	1
001747	4	1
001746	3	2
000513	2	1
000512	1	1

M1	E1	V16	N1	T1
12x15mm x4	8x30mm x4	5x16mm x12	L=35mm x8	x4

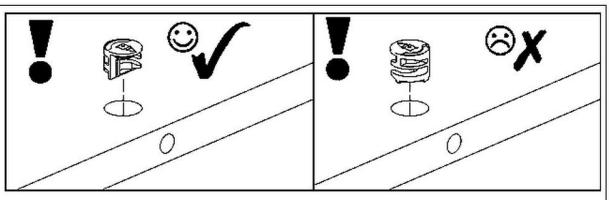

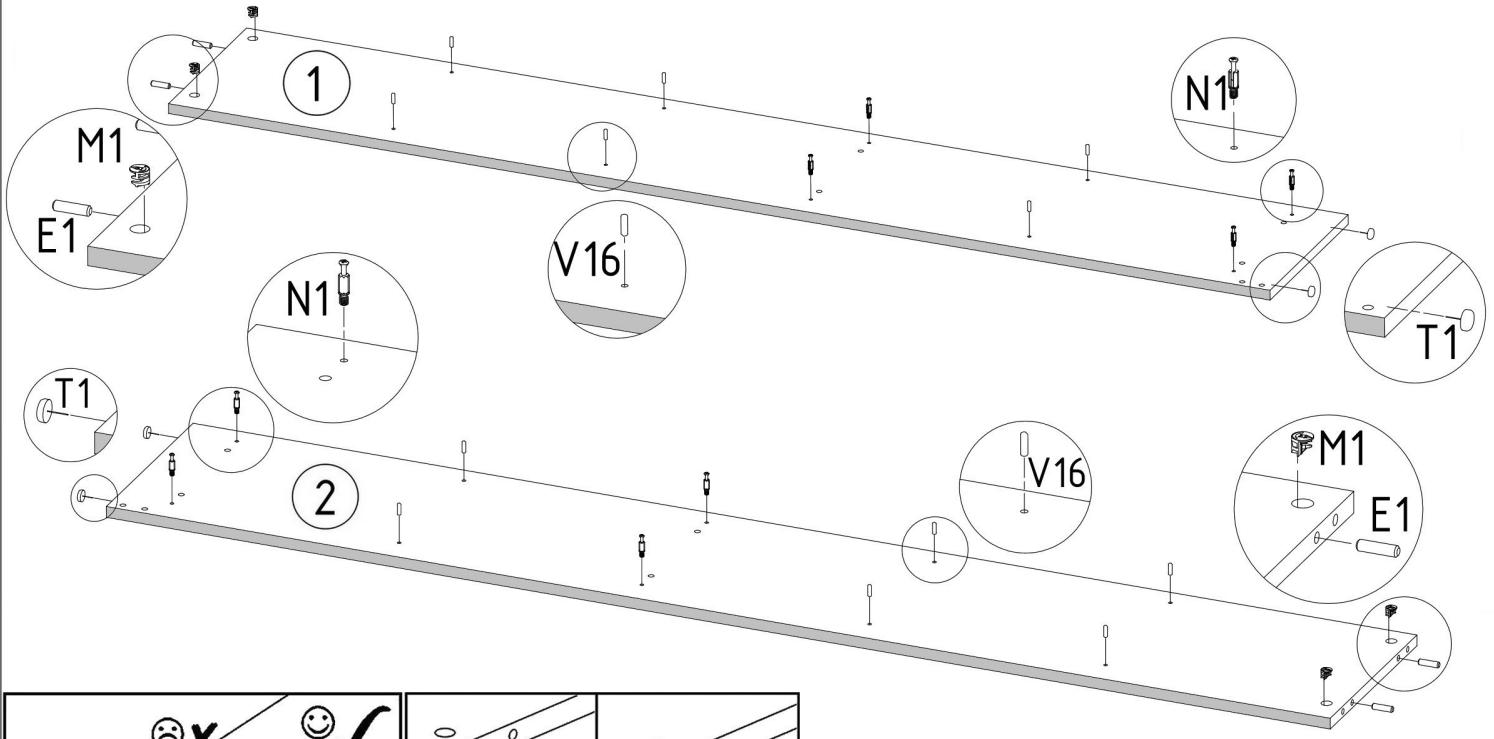

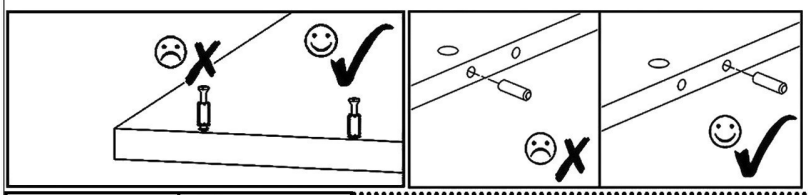

M1	E1
12x15mm x8	8x30mm x8

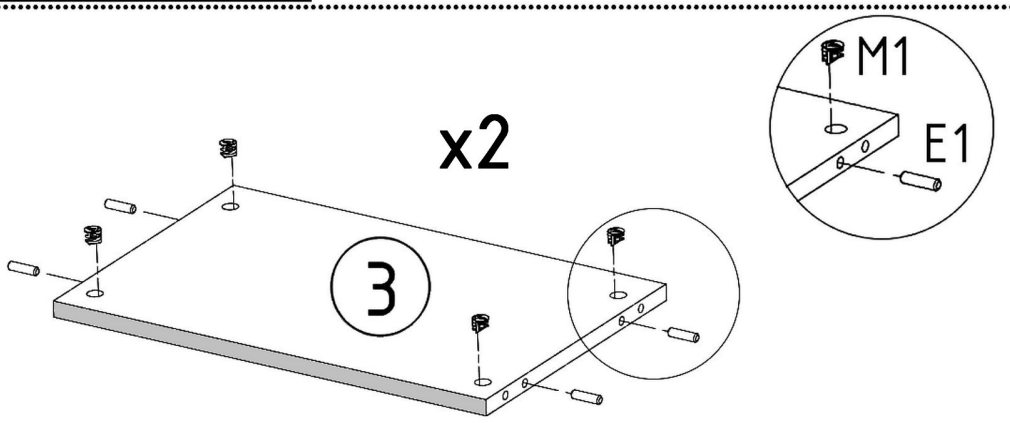

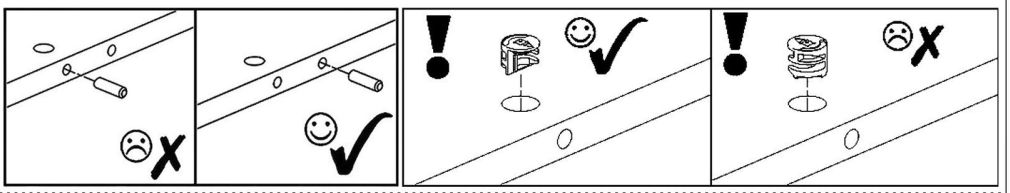

E1
8x30mm x4

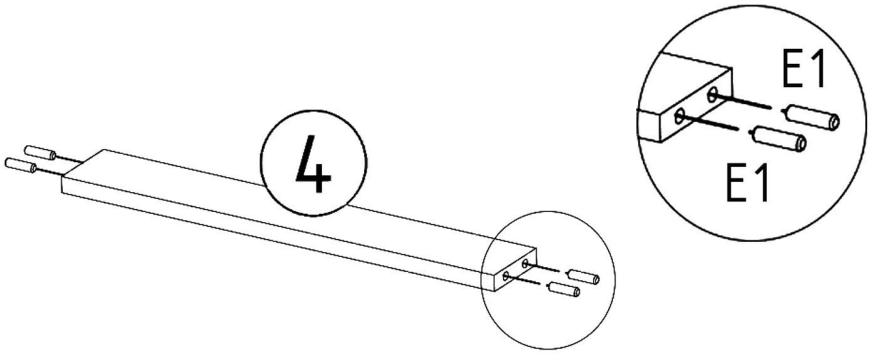

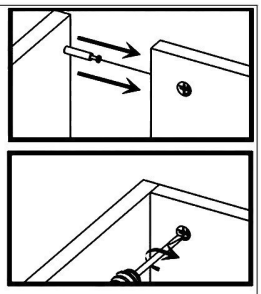

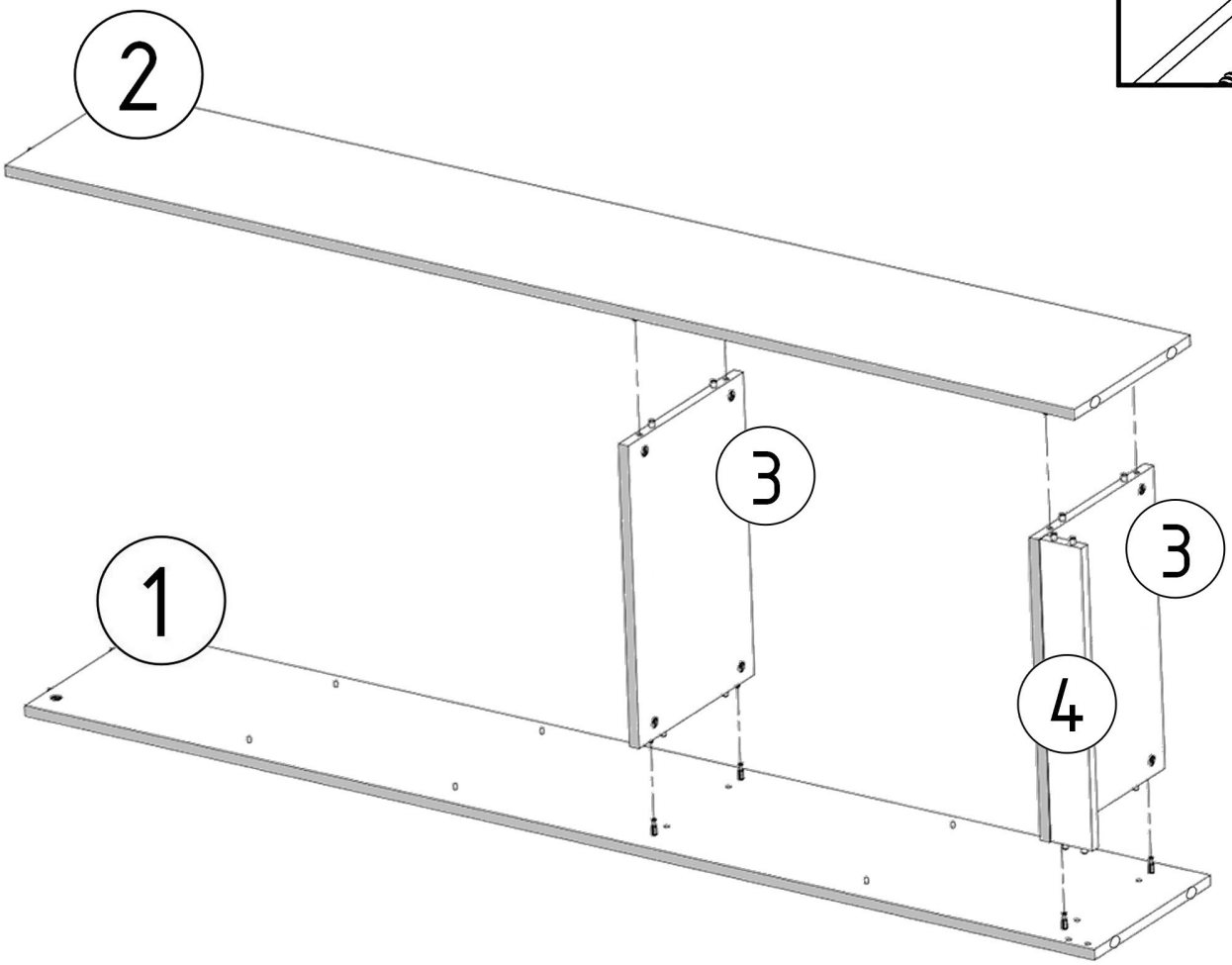
2
3
3
1
4

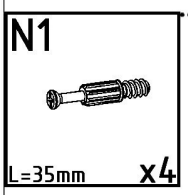
N1
L=35mm
x4

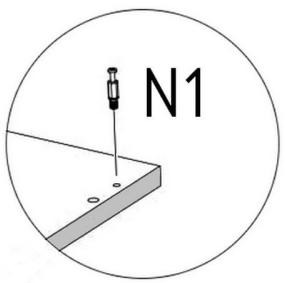
N1

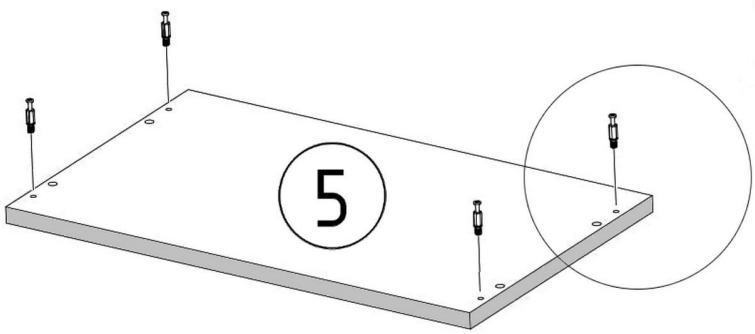
5

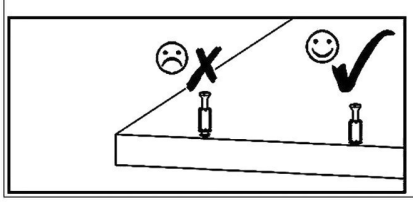

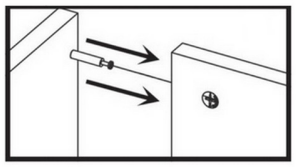

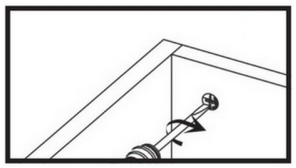

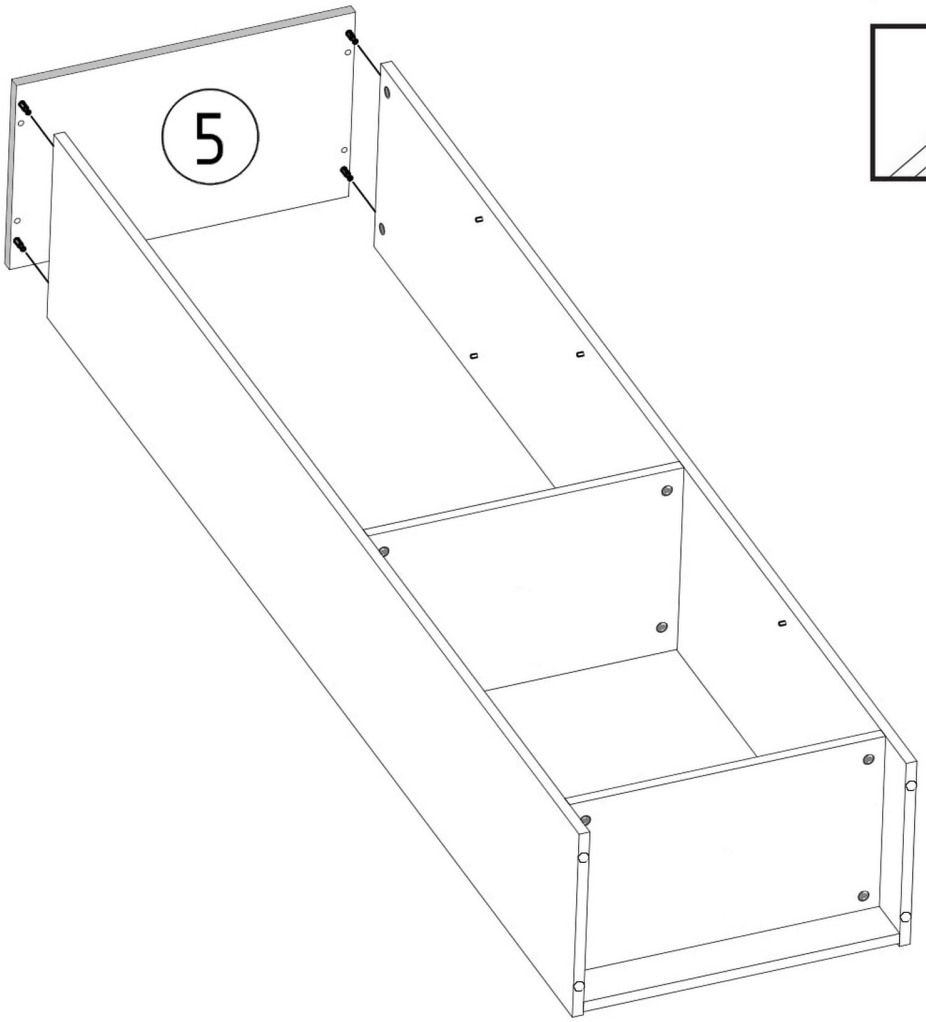
5

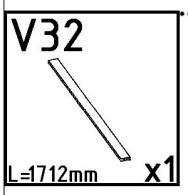
V32
L=1712mm
x1

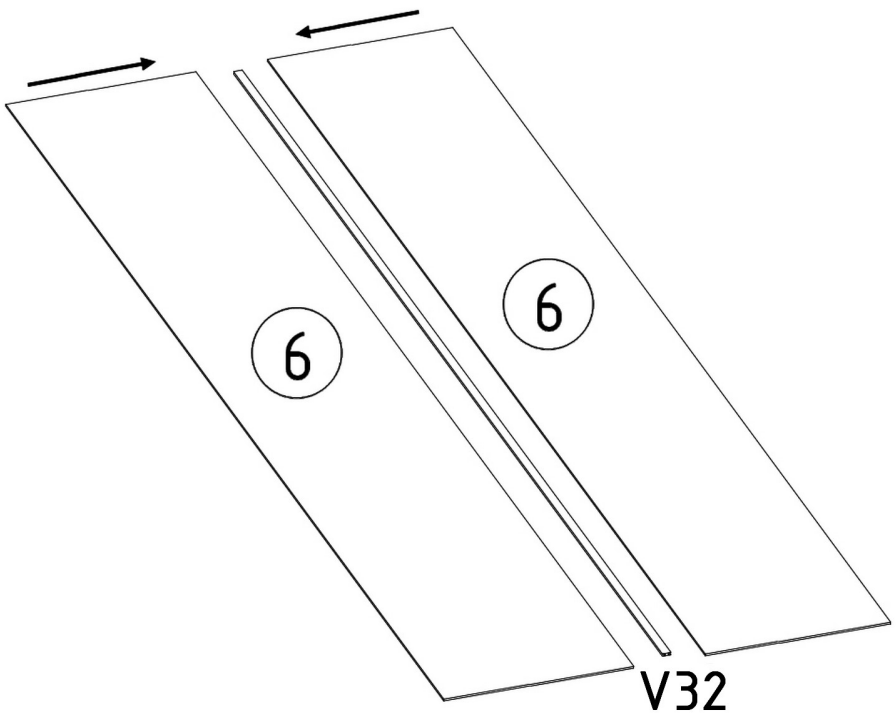
6
6
V32

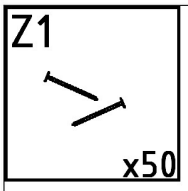
Z1
x50

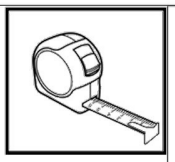

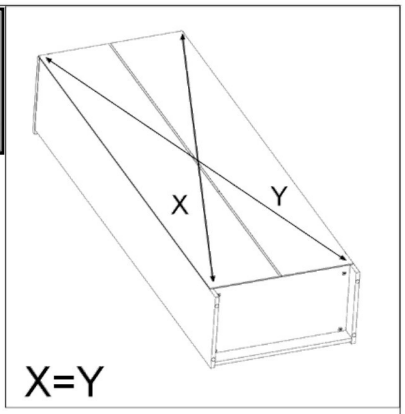
X
Y
X=Y

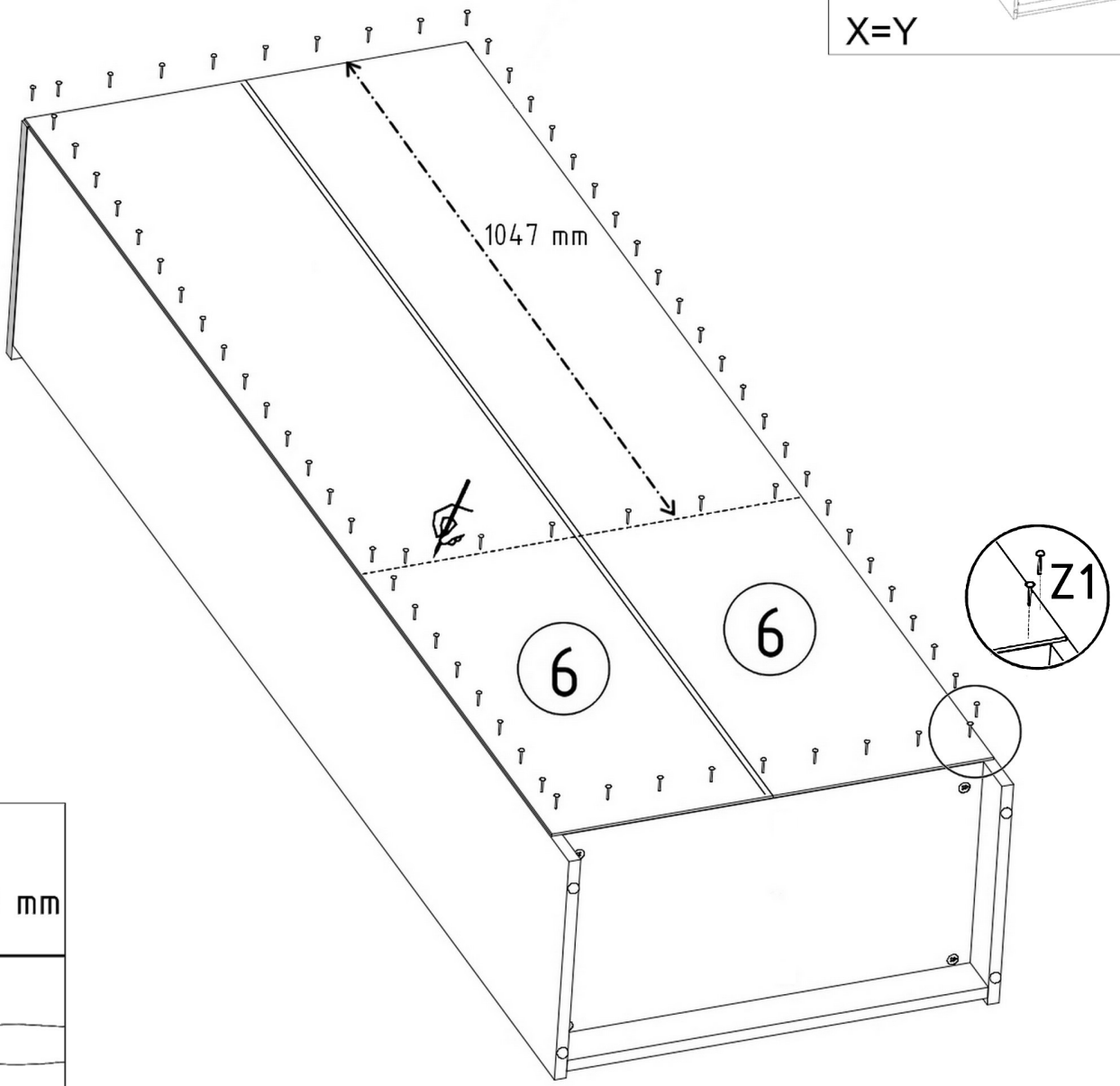
1047 mm
6
6
Z1

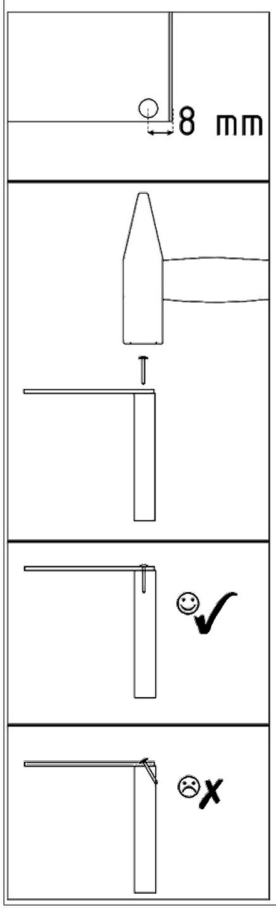
8 mm

V13	B1
	
x1	ø17/4mm x4

