INSTRUKCJA MONTAŻU

Szafa 3-drzwiowa 150 cm z 11 półkami i drążkiem

Kolor: Biały, czarne uchwyty

Kod produktu: OR10186

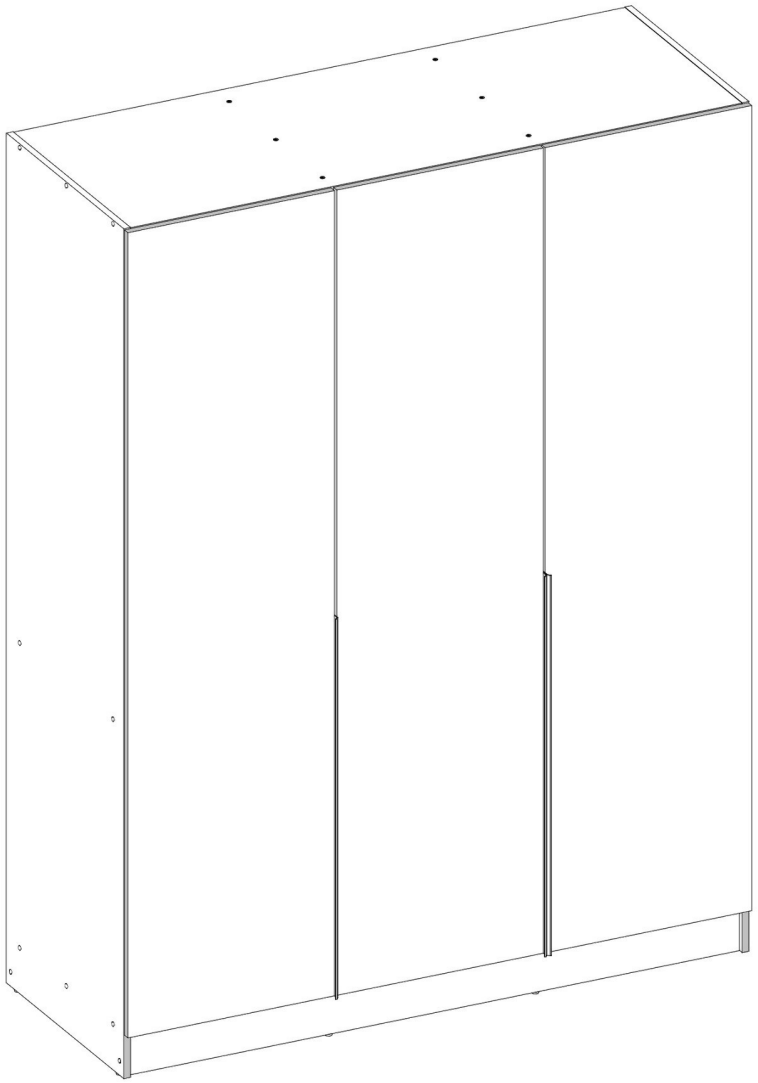

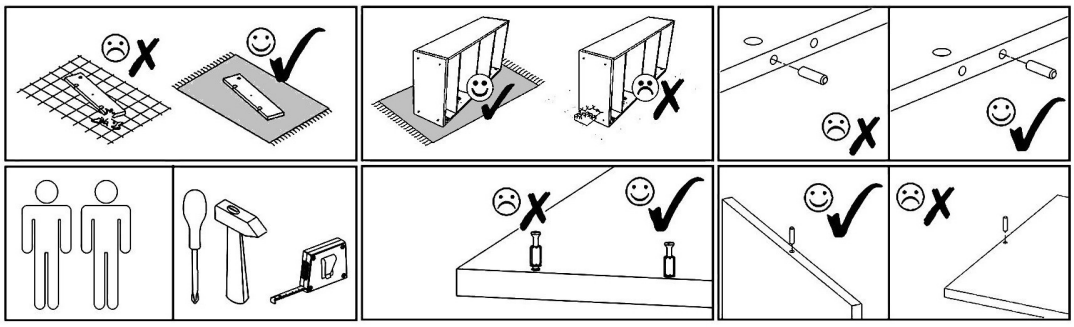

B2 Ant ø12/4mm x20	B2 B ø12/4mm x20	B2 K ø12/4mm x20

V8 L=468mm x1	V25 x4	F1 7x50mm x40	F3 Hex 4mm x1	V41 x1	Z1 x150	U13 L=1100mm x3	B2 CZ ø12/4mm x20
A11 ZB$_D$ x4	A9 ZP$_D$ x8	V16 5x16mm x24	E1 8x30mm x32	T1 x8	V19 x2	S1 3,5x16mm x48	V15 x30

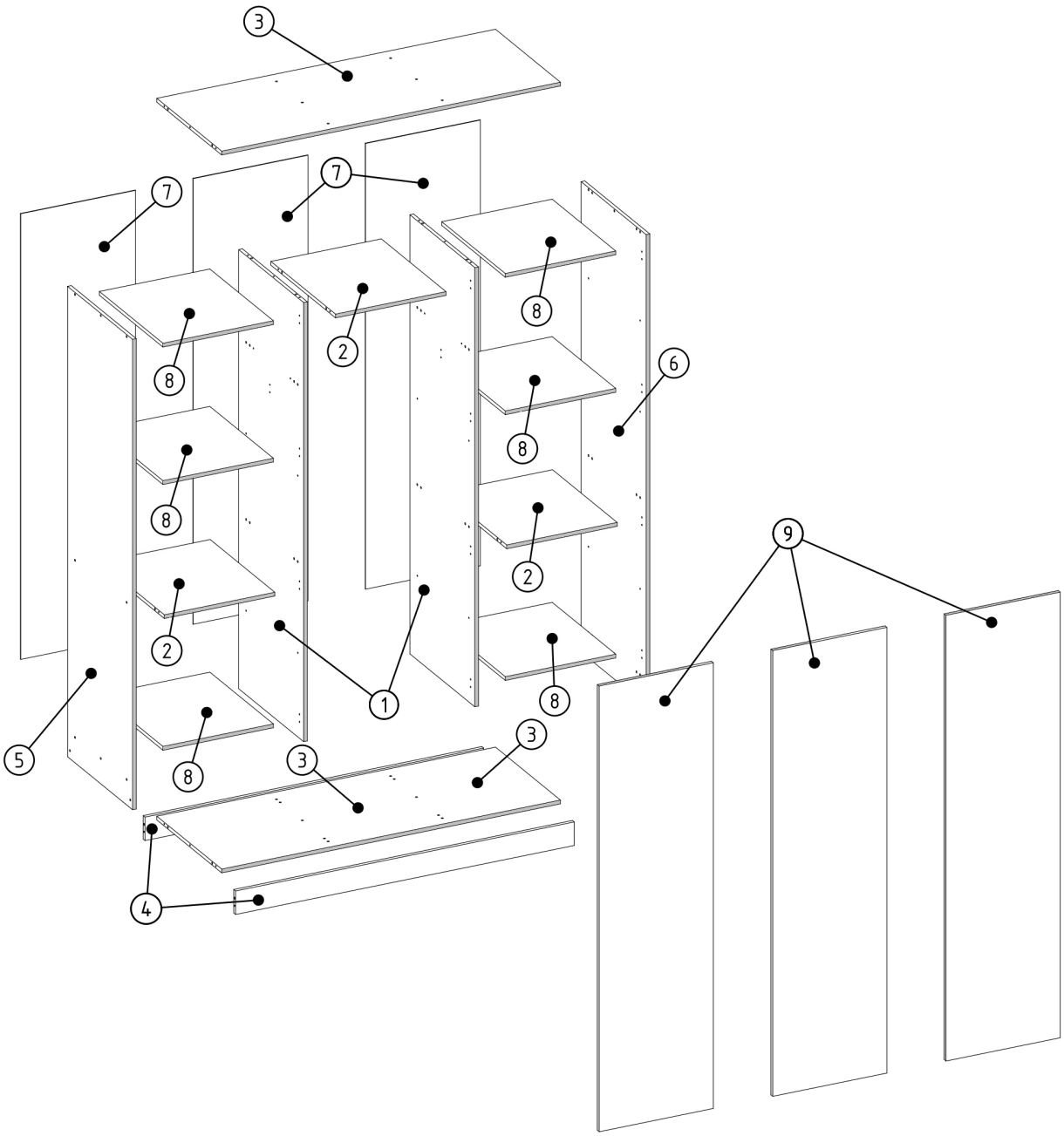

ID	NUMBER	QUANTITY
001660	1	2
001659	2	3
001665	3	2
001666	4	2
001664	5	1
001663	6	1
001661	7	3
001667	8	6
001662	9	3

V16
5x16mm x6

E1
8x30mm x4

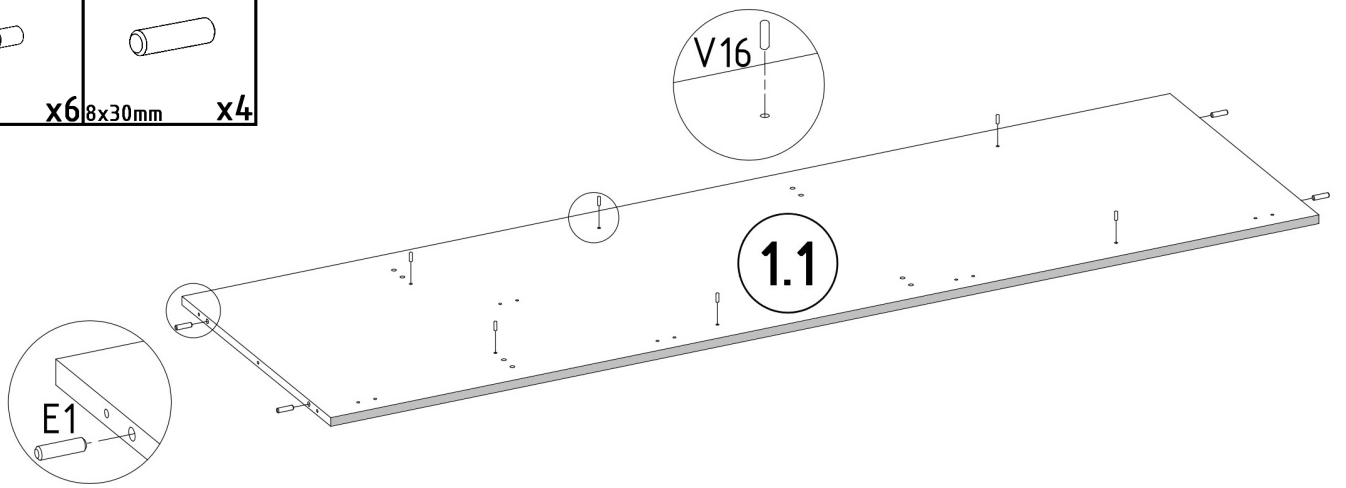

V16
5x16mm x6

E1
8x30mm x4

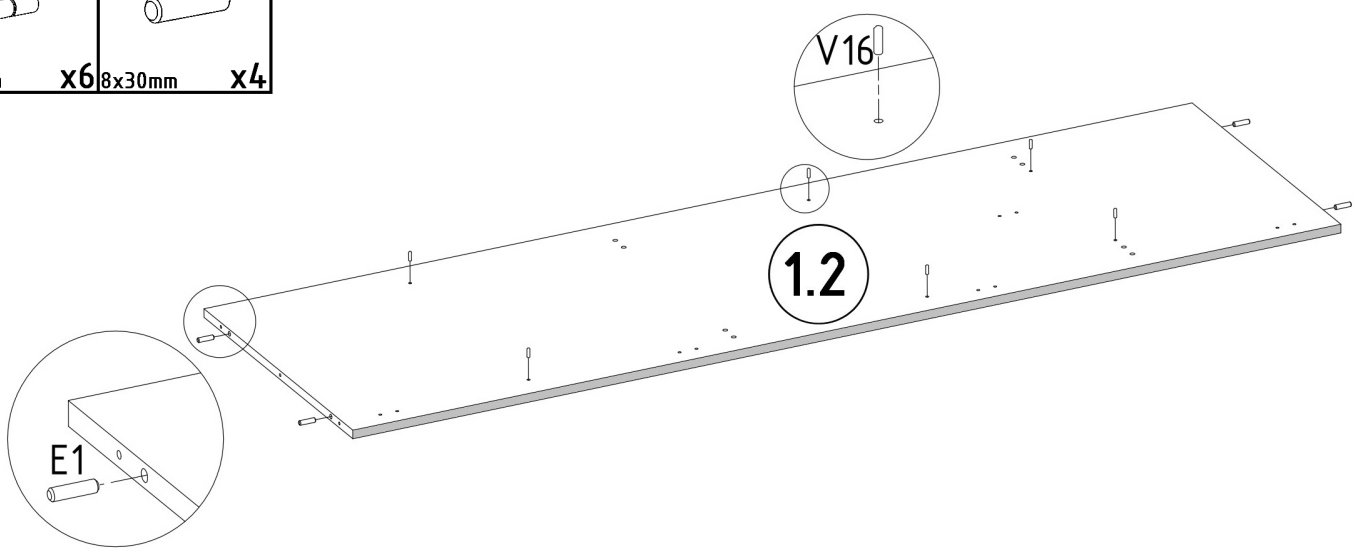

E1
8x30mm x12

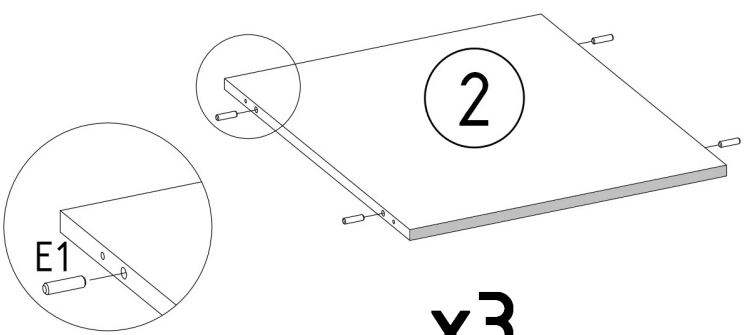

x3

S1	V19	F1	F3
3,5x16mm x2	x2	7x50mm x8	Hex 4mm

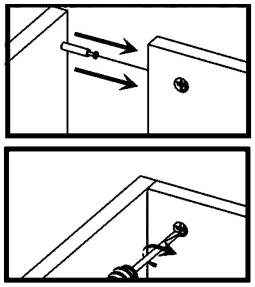

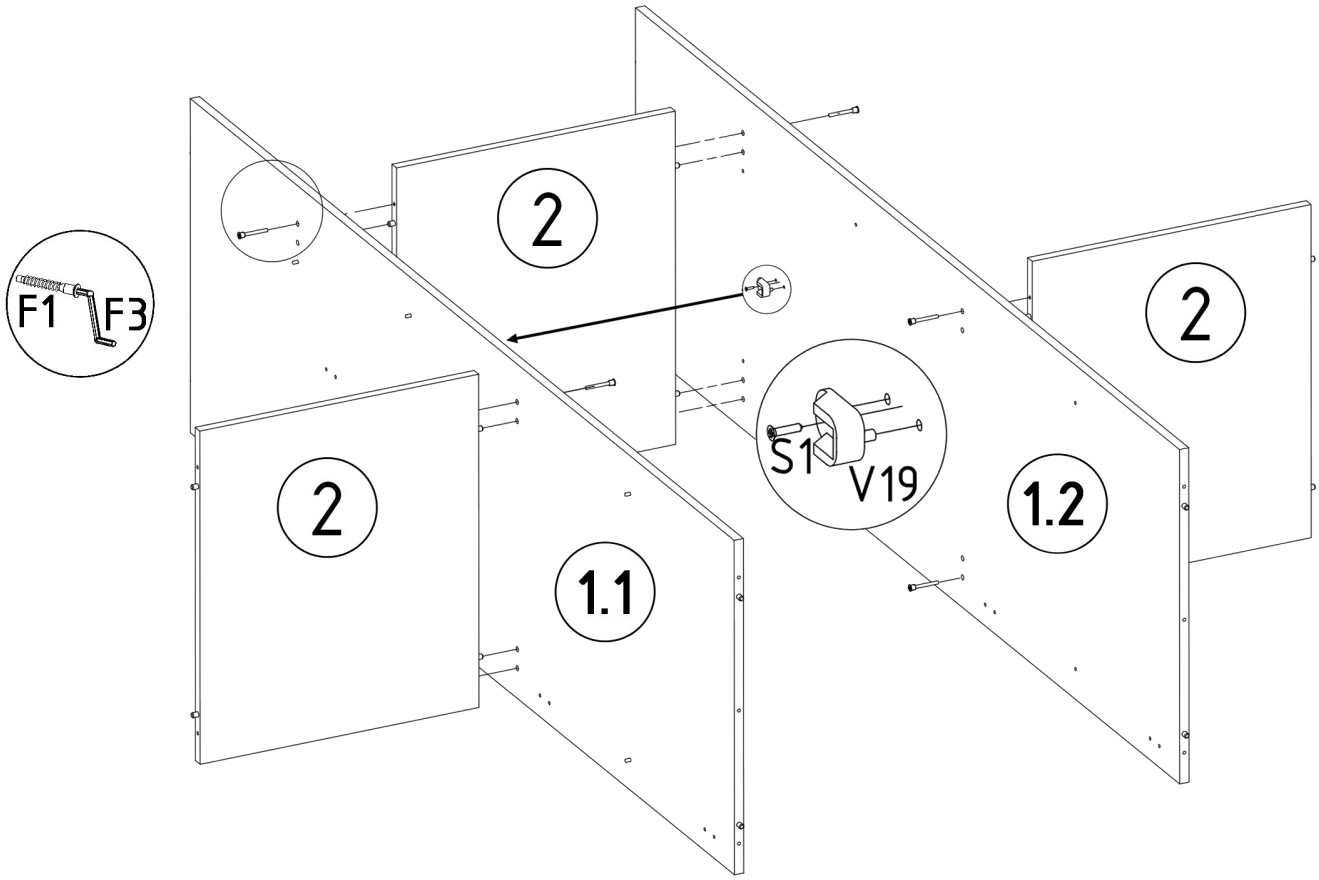

E1
8x30mm x8

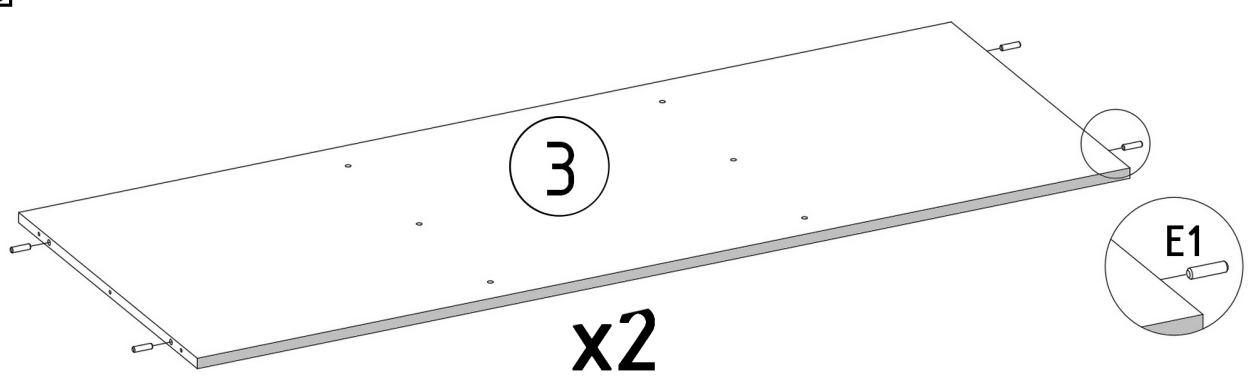

F1	F3
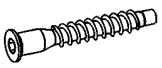	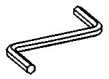
7x50mm x12	Hex 4mm

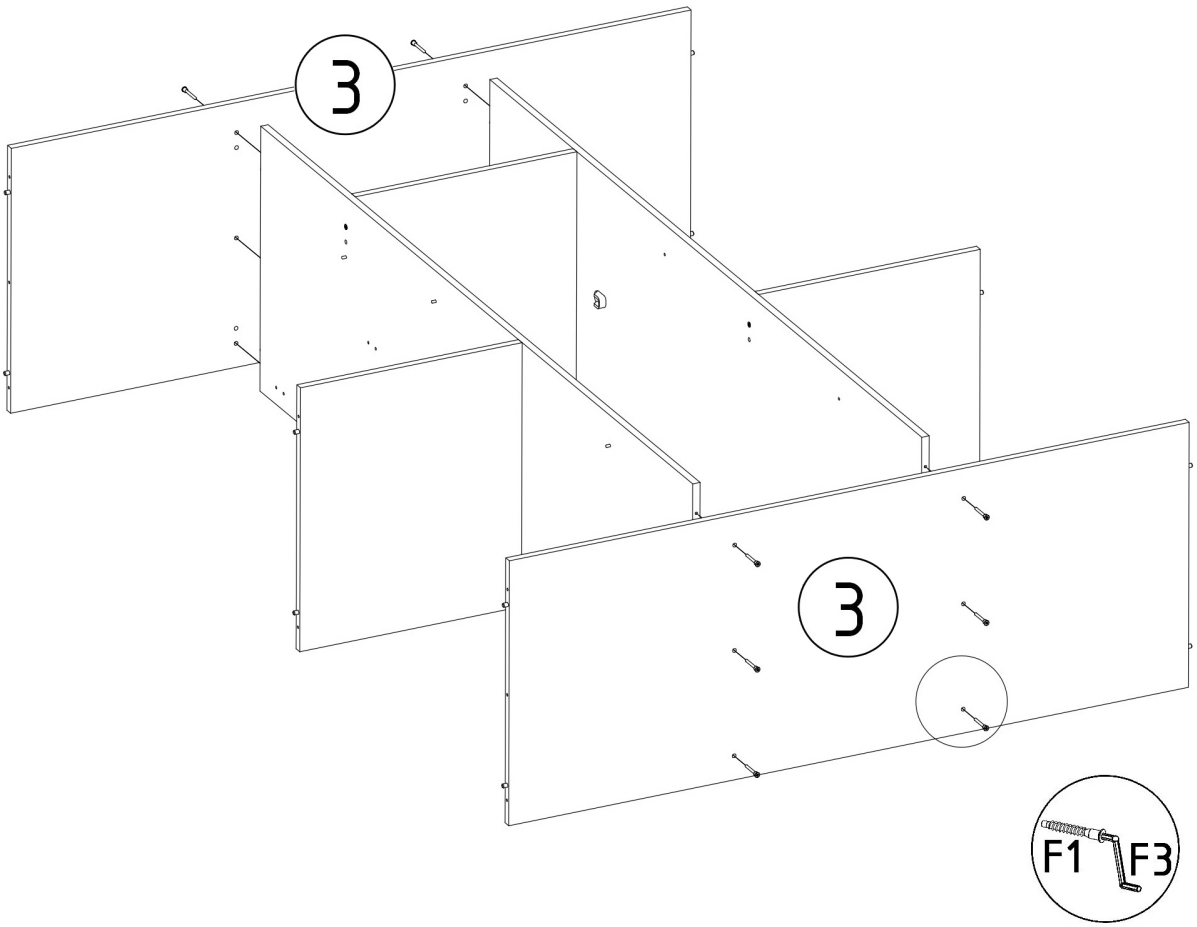

T1	V16
	
x2	5x16mm x6

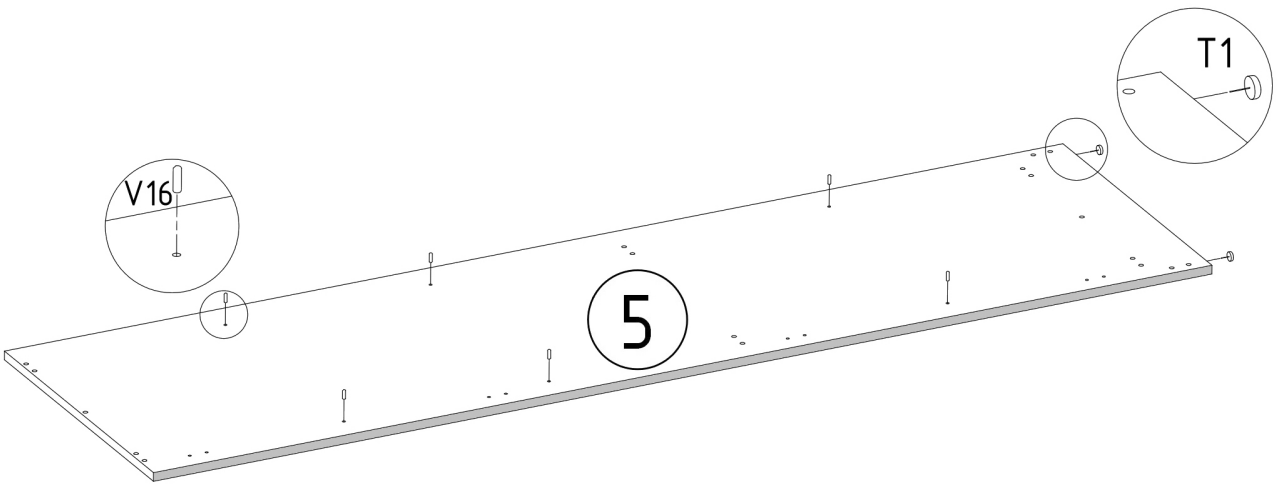

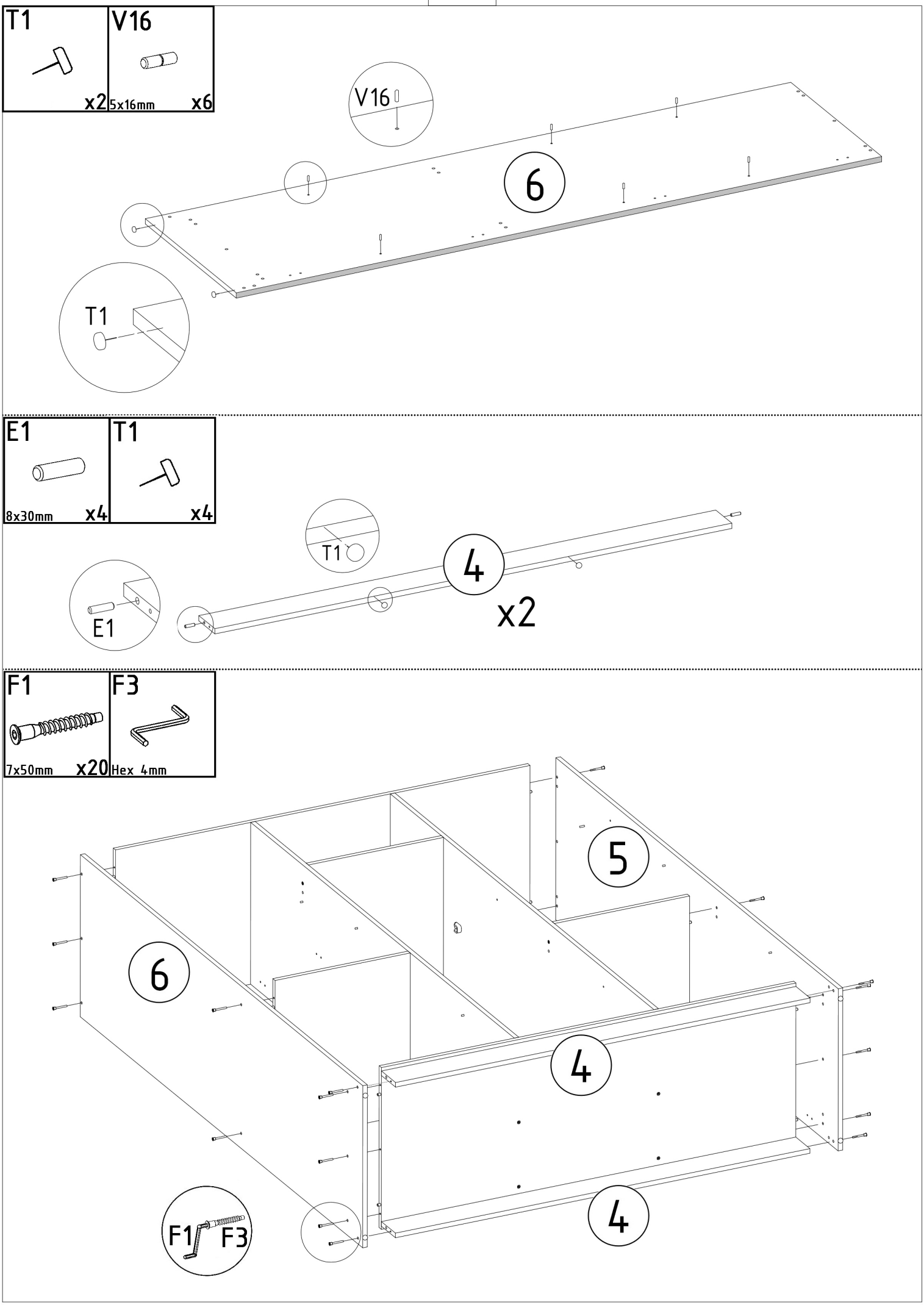
T1
x2
V16
5x16mm
x6
V16
6
T1
E1
8x30mm
x4
T1
x4
T1
4
x2
E1
F1
7x50mm
x20
F3
Hex 4mm
5
6
4
4
F1
F3

Z1	V15	S1	V25
x150	x30	3,5x16mm x8	x4

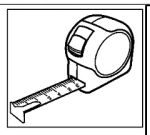

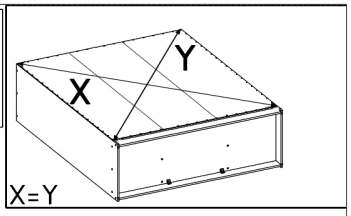

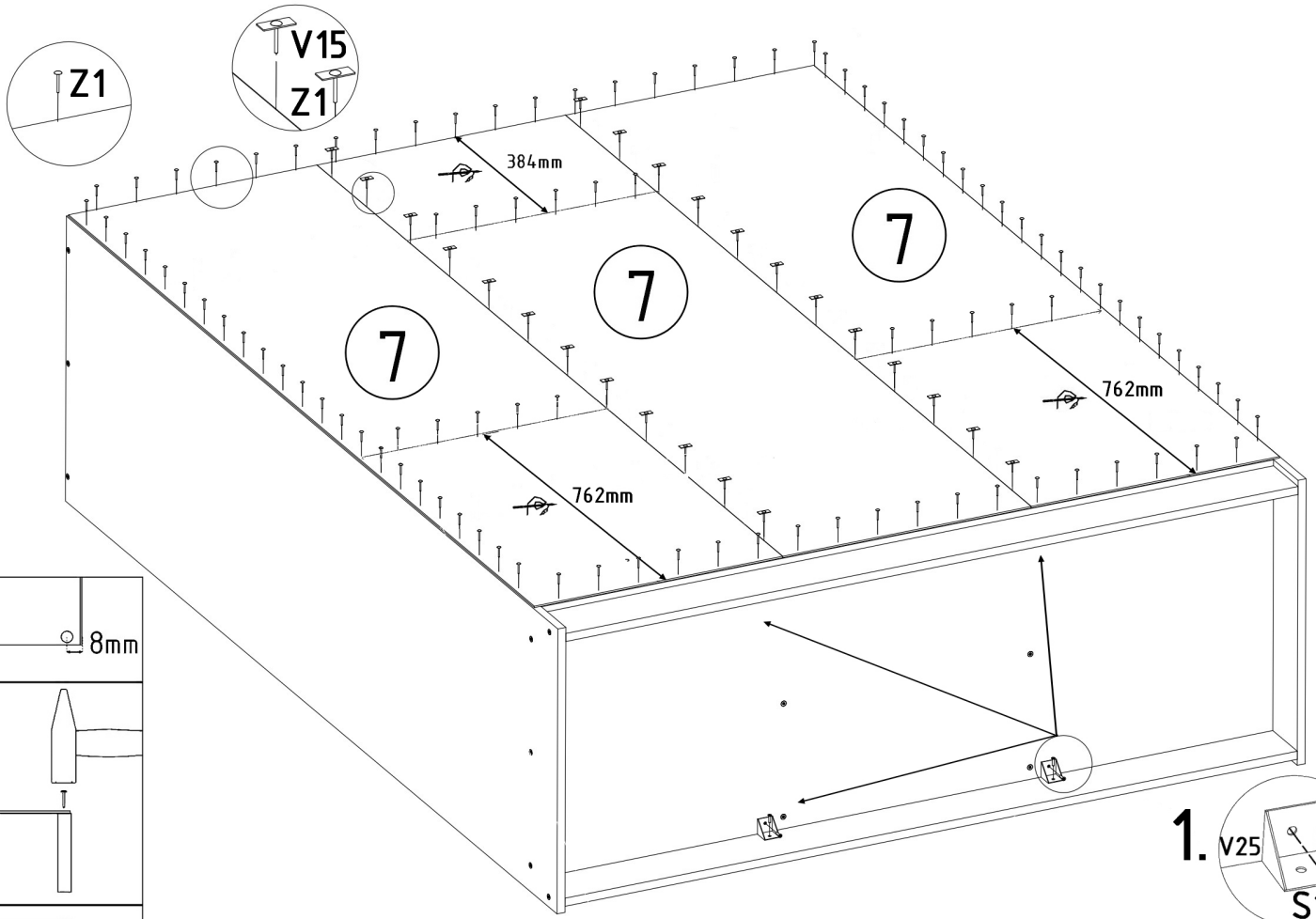

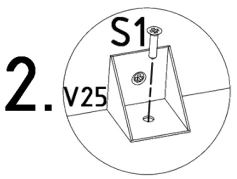

A9	S1
ZPD x8	x16

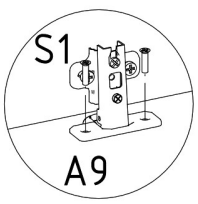

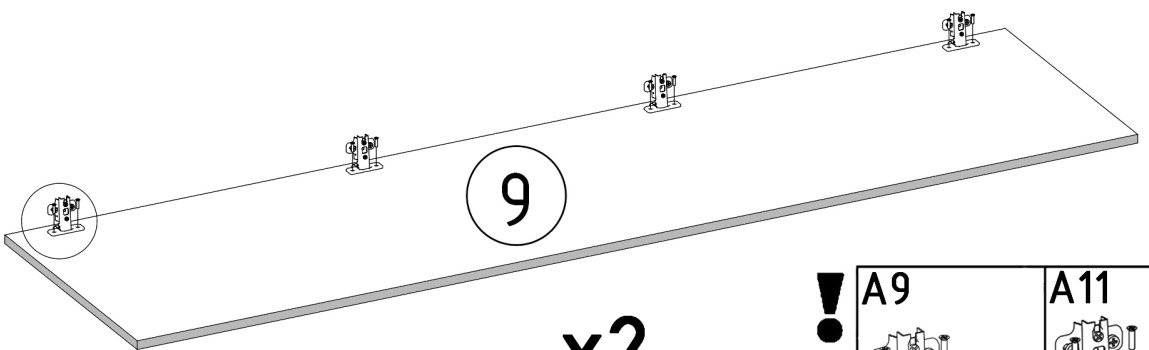

x2

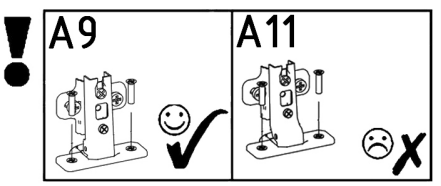

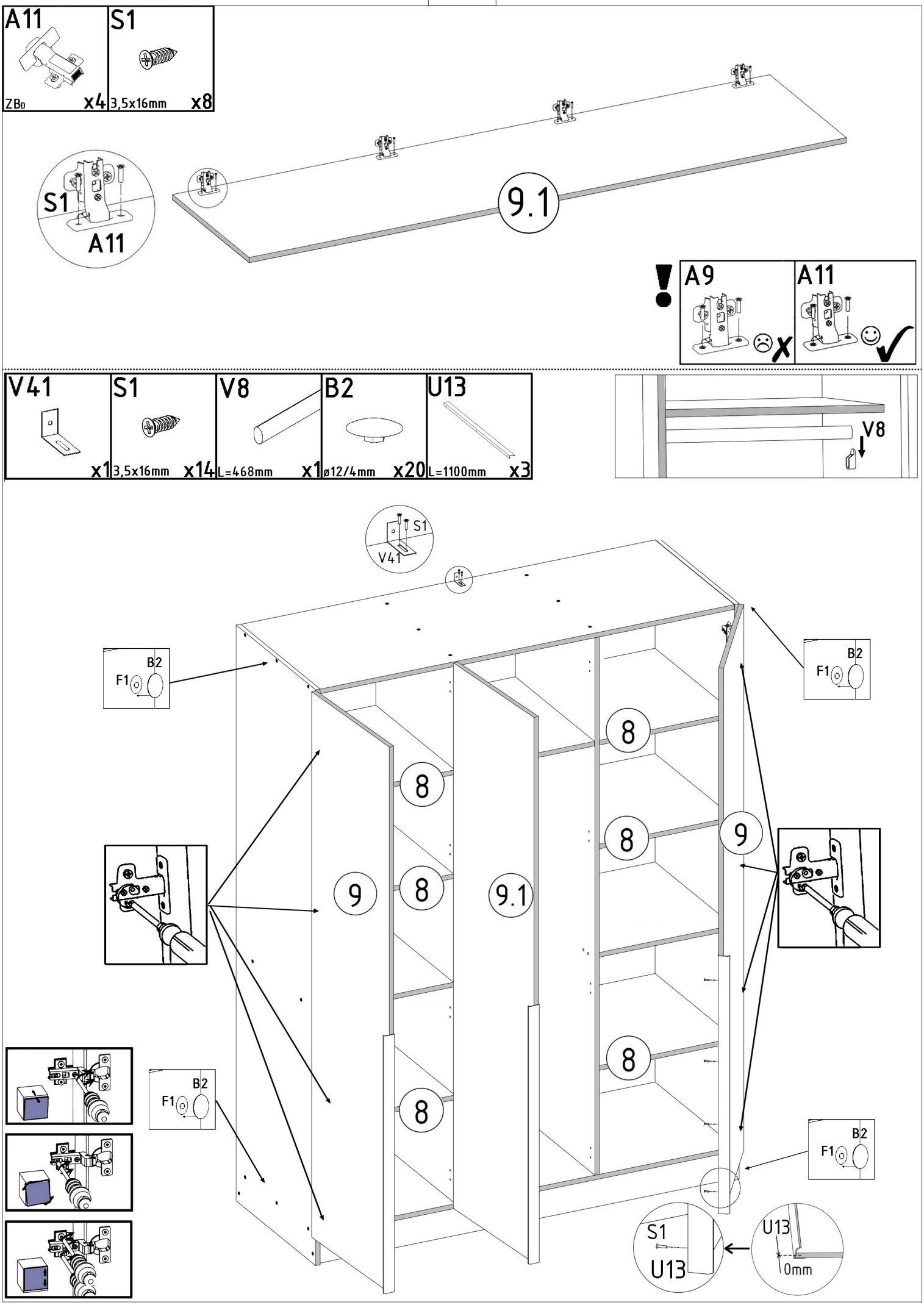
A11
ZBD
x4
S1
3,5x16mm
x8
S1
A11
9.1
A9
A11
V41
x1
S1
3,5x16mm
x14
V8
L=468mm
x1
B2
ø12/4mm
x20
U13
L=1100mm
x3
V8
S1
V41
B2
F1
8
9
9.1
S1
U13
U13
0mm