INSTRUKCJA MONTAŻU

Regał 50 cm z 7 półkami, 183 cm

Kolor: Biały

Kod produktu: OR10443

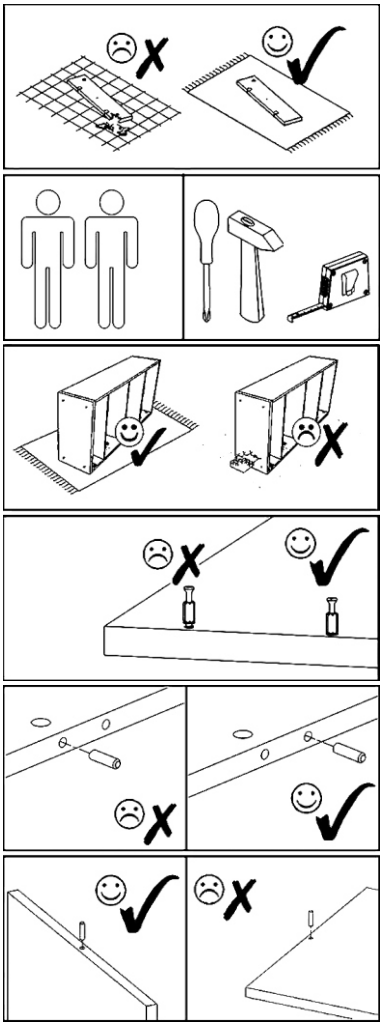

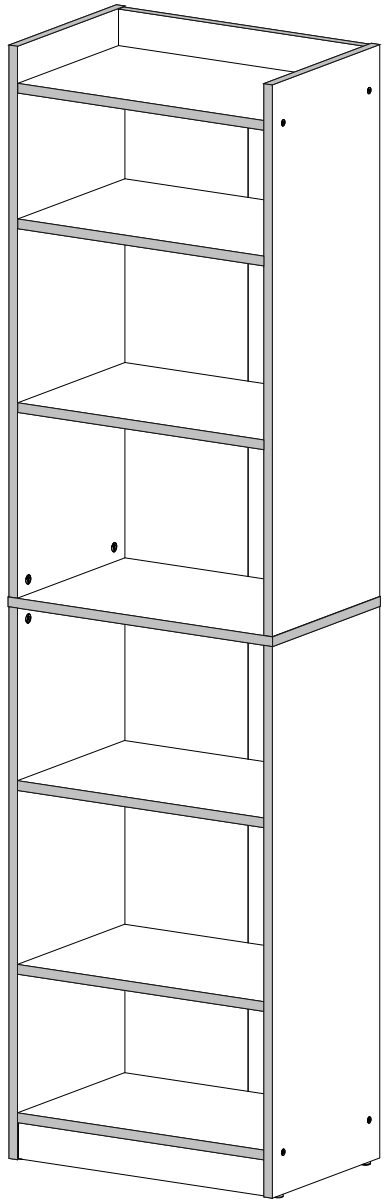

E1 8x30mm x16	F3 Hex 4mm x1	M1 12x15mm x8	T1 x4	V16 5x16mm x16	F1 7x50mm x8	V13 x1	Z1 x60
N4 L=62mm x4	E3 8x50mm x4	V15 x5	B1 B ø17/4mm x8	B1 S/A ø17/4mm x8	B2 S/A ø12/4mm x8	B2 B ø12/4mm x8	V32 L=828mm x2

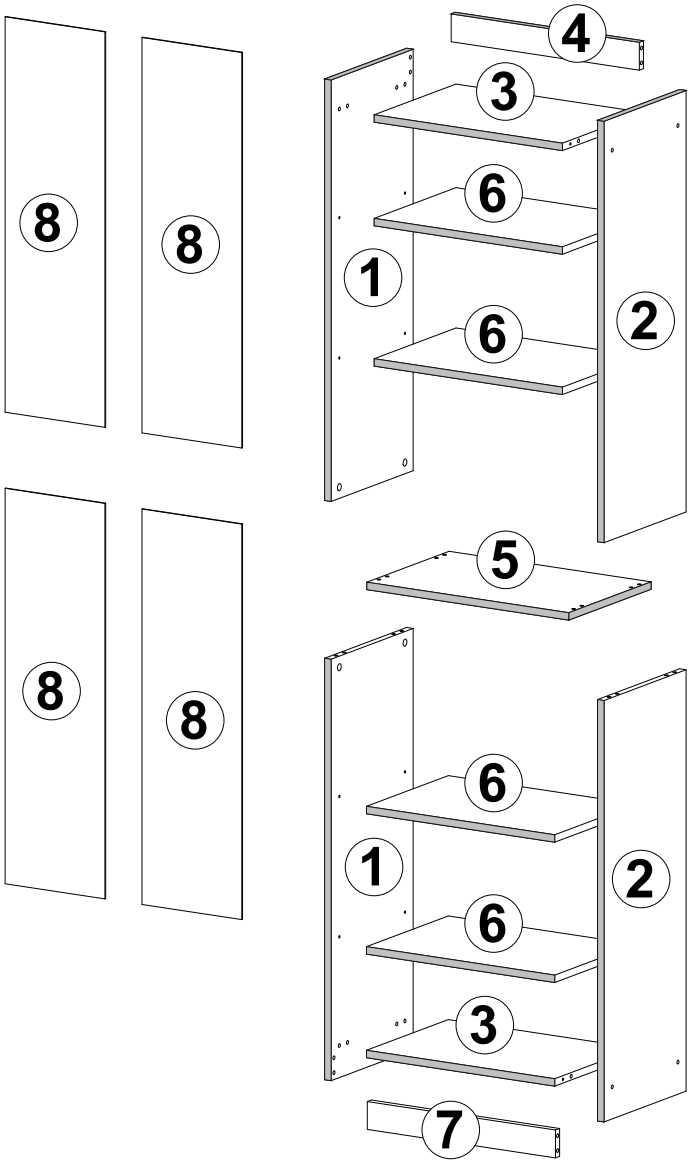

002107	1	2
002106	2	2
002110	3	2
002111	4	1
002108	5	1
002109	6	4
002111	7	1
002112	8	4
ID	NUMBER	QUANTITY

E3	V16	T1	M1
8x50mm x4	5x16mm x8	x4	12x15mm x4

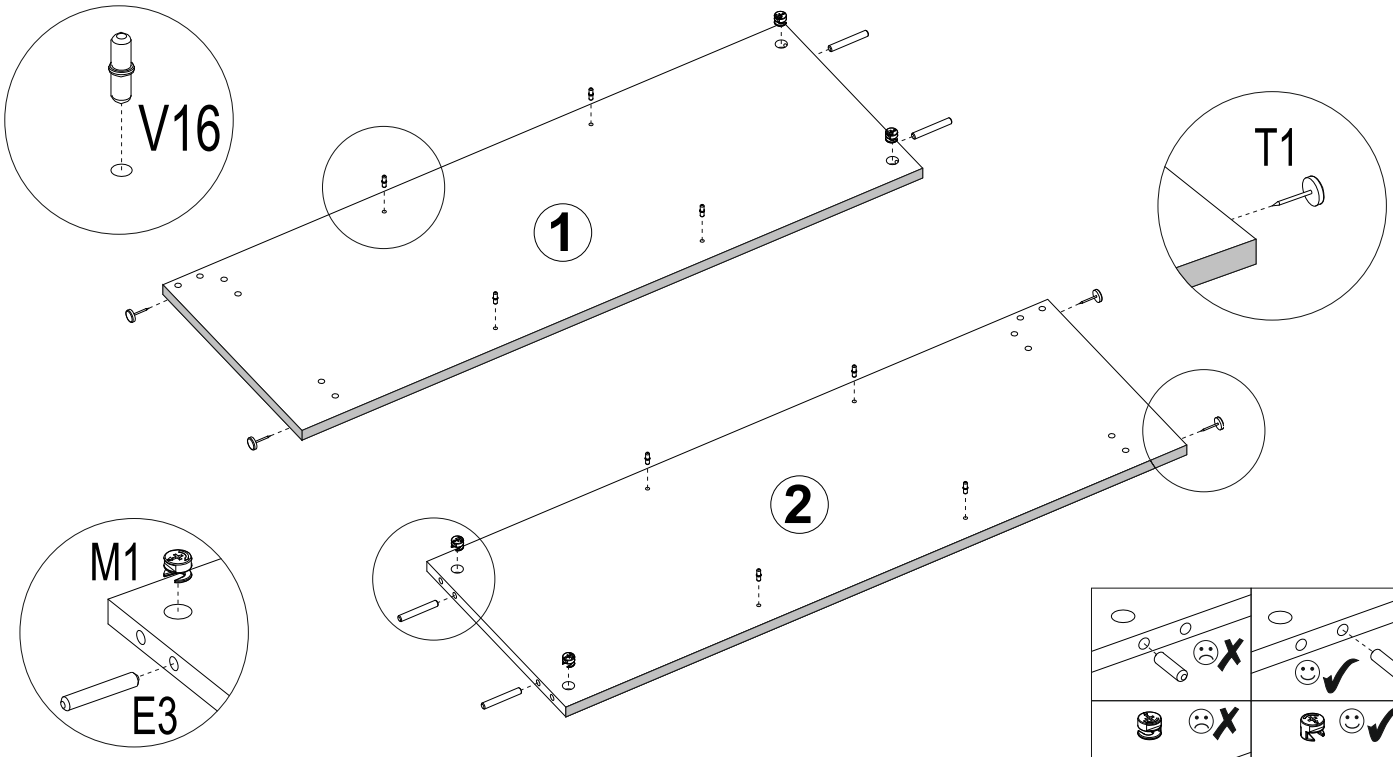

V16	M1
5x16mm x8	12x15mm x4

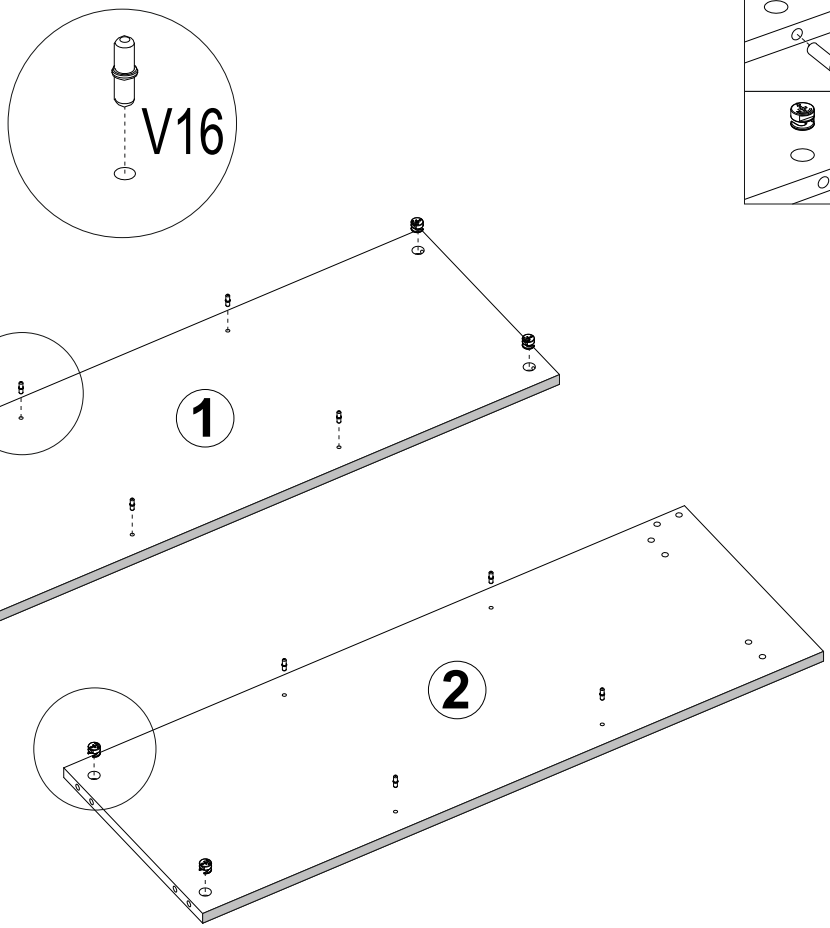

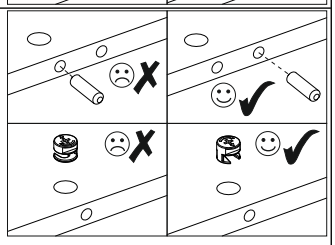

E1

8x30mm x16

x2

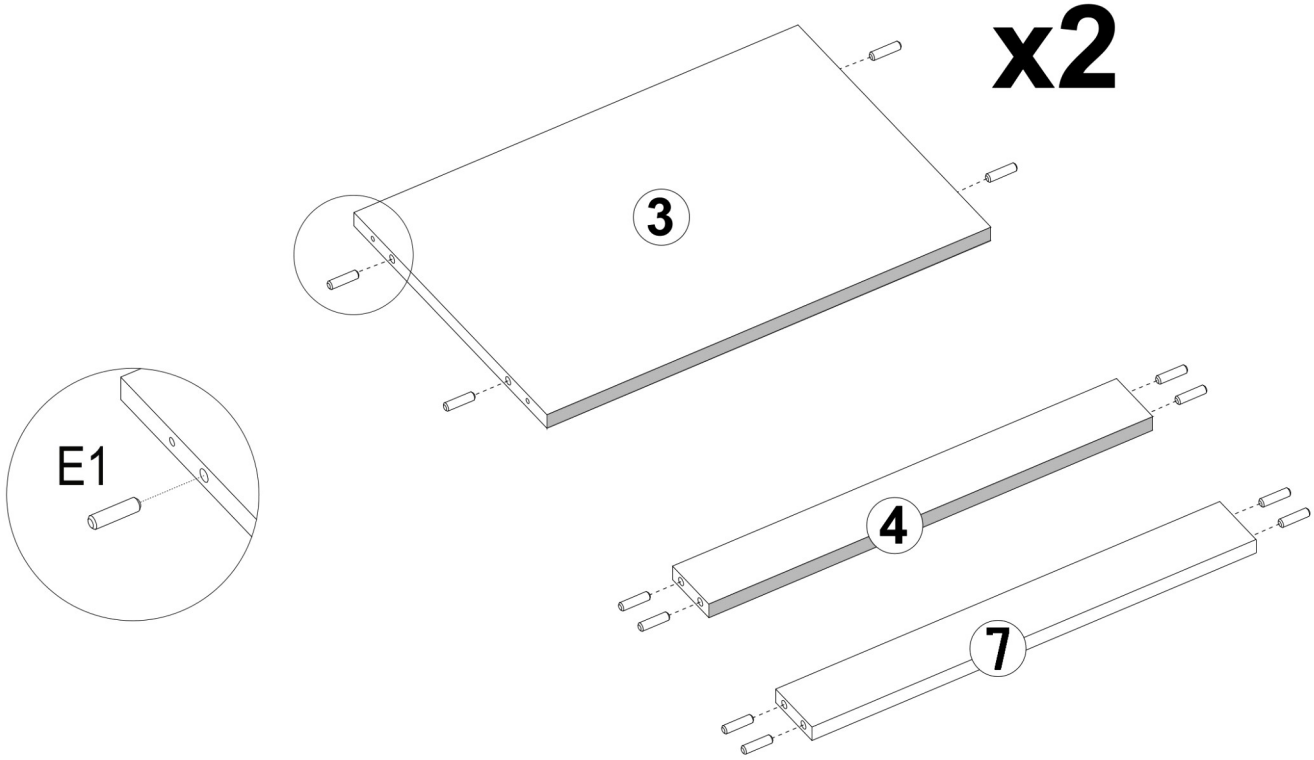

F1

7x50mm x4

F3

Hex 4mm x1

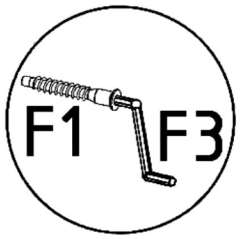

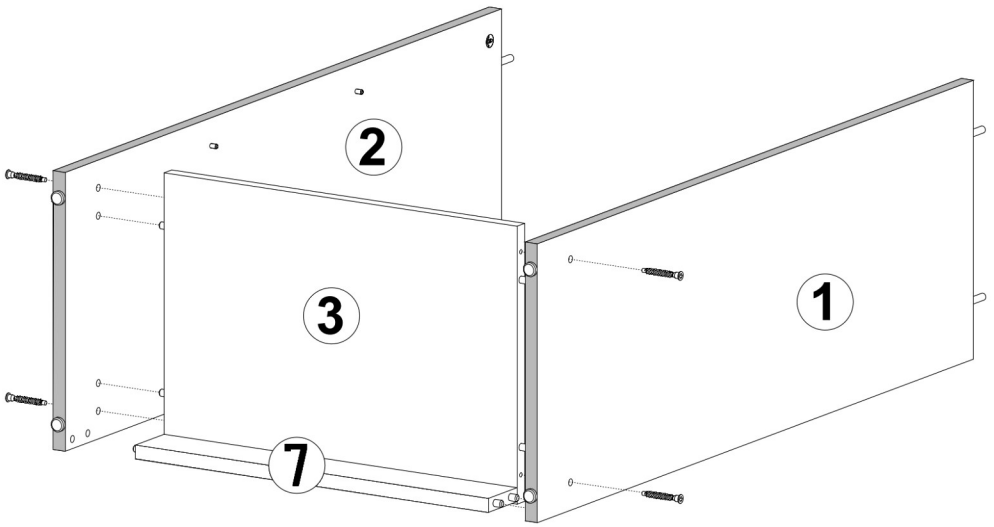

F1

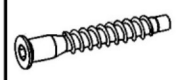

7x50mm x4

F3

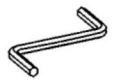

Hex 4mm x1

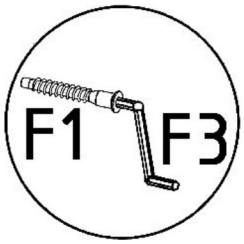

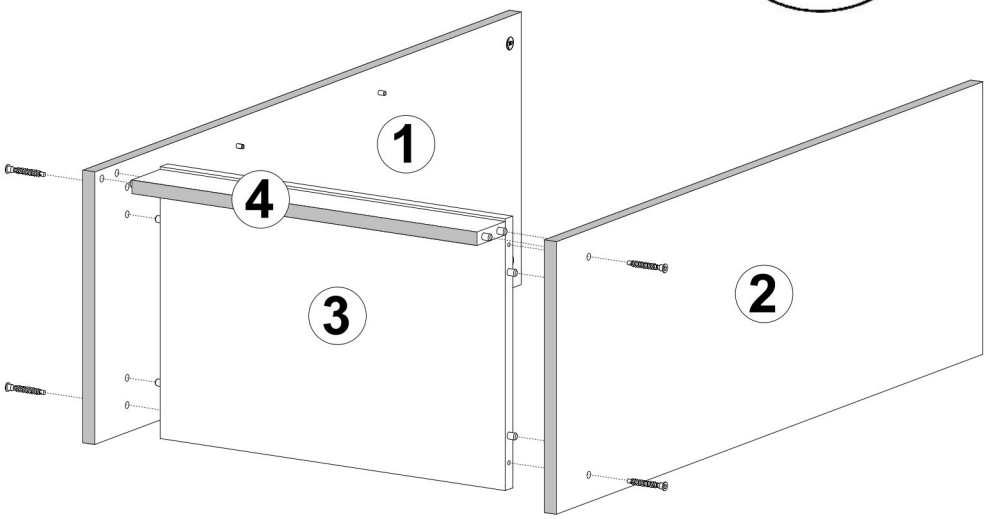

N4

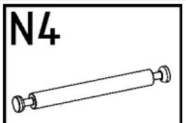

L=62mm x4

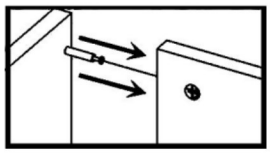

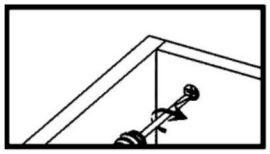

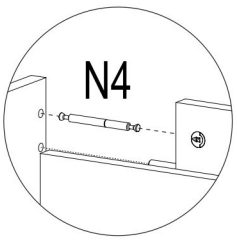

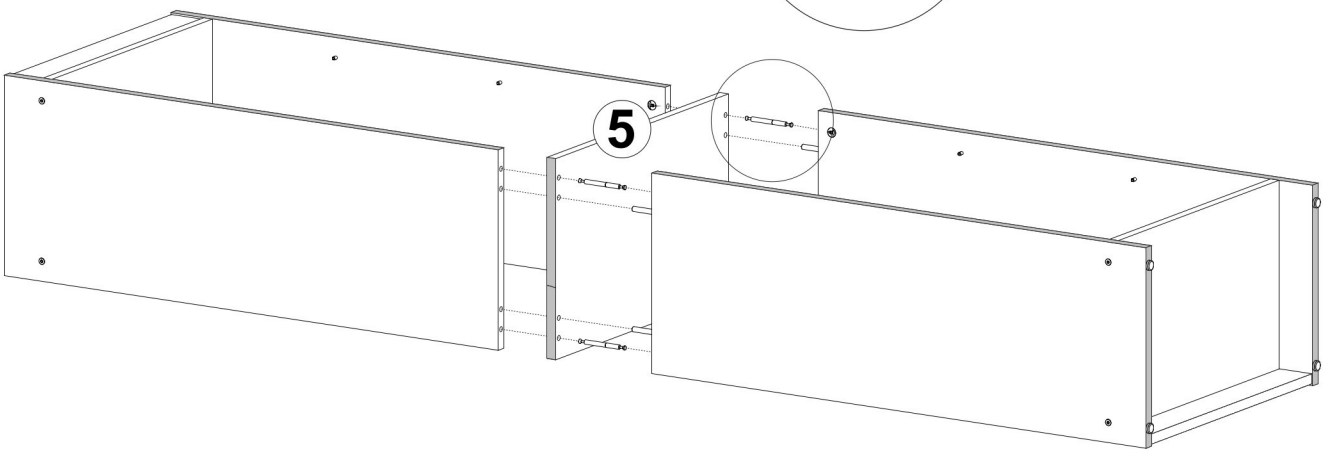

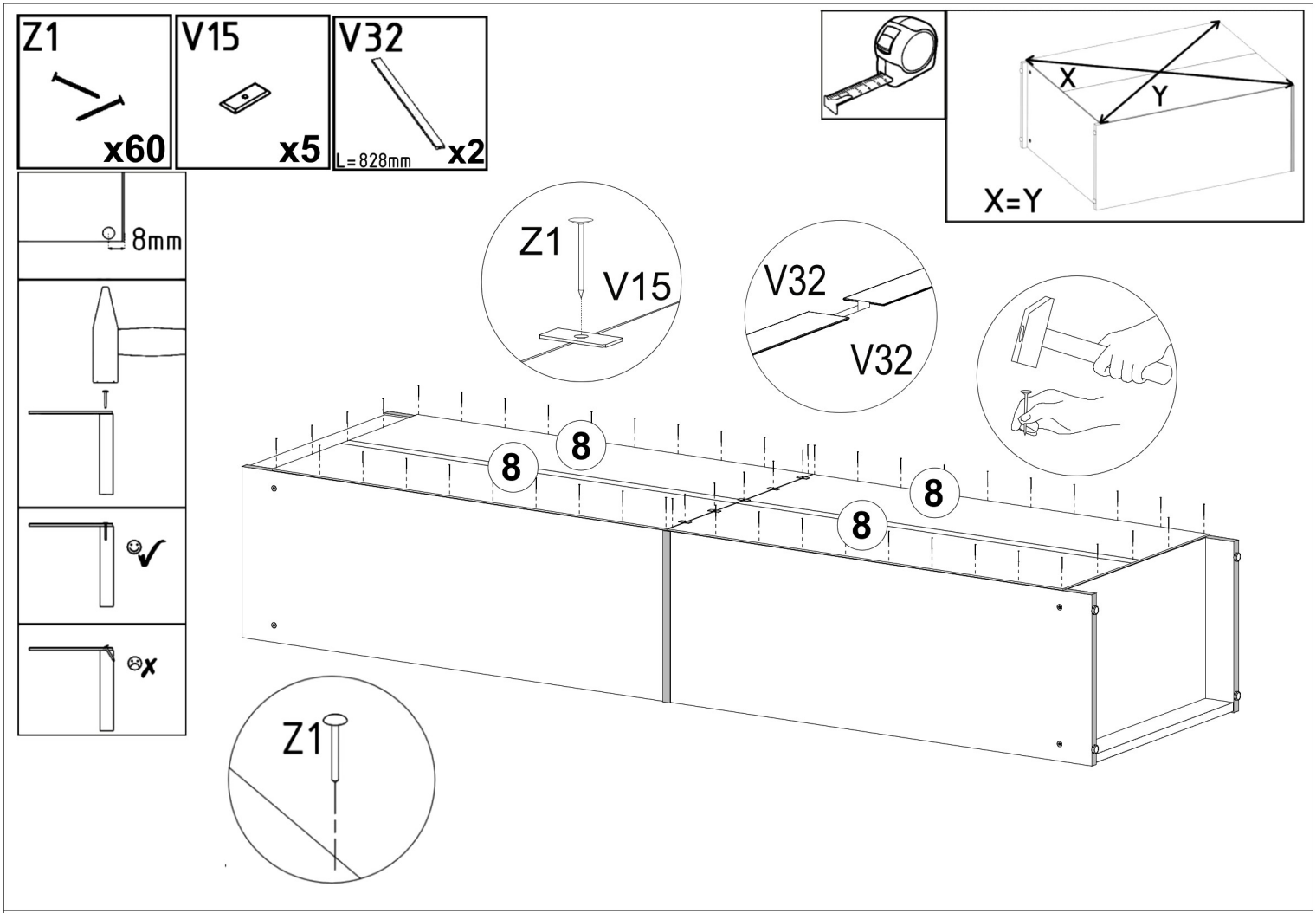
Z1
x60
V15
x5
V32
L=828mm
x2
8mm
X
Y
X=Y
Z1
V15
V32
V32
8
8
8
8
Z1

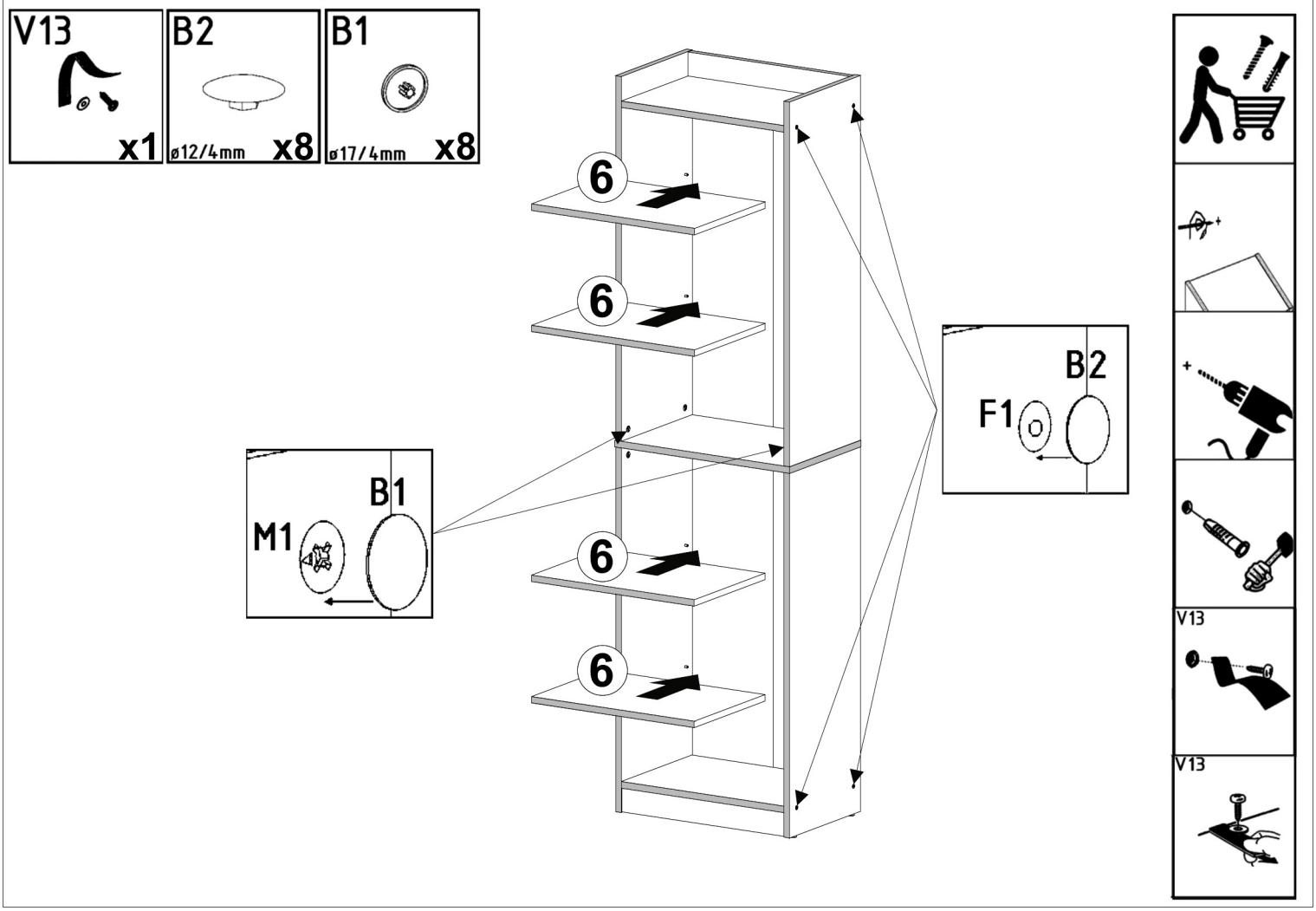
V13
x1
B2
ø12/4mm
x8
B1
ø17/4mm
x8
6
6
6
6
B2
F1
B1
M1
V13
V13