INSTRUKCJA MONTAŻU

Komoda 120 cm z 2 parami drzwiczek i 3 szufladami

Kolor: Antracyt / Dąb Artisan

Kod produktu: OR10223

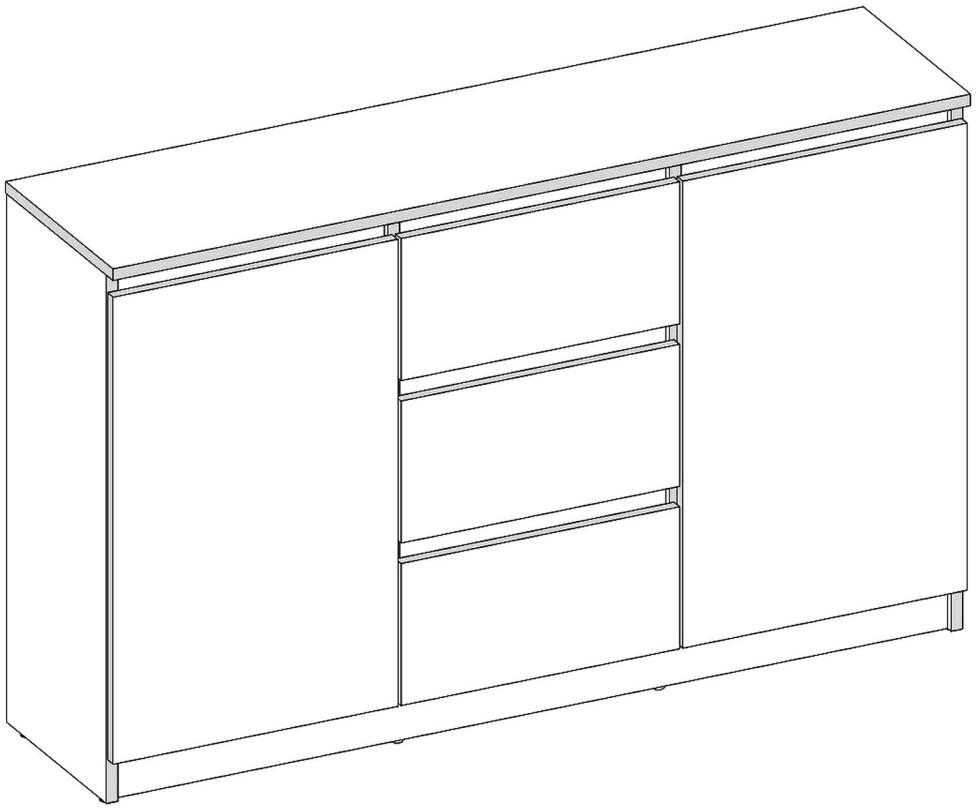

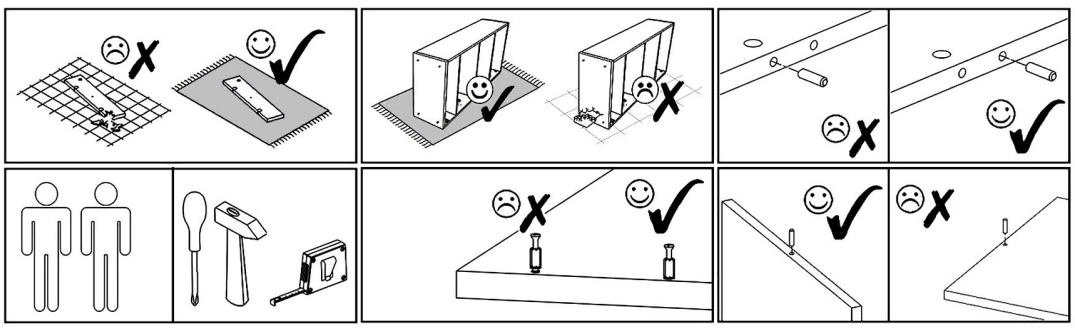

V13 x1	S6 2,5x20mm x8	B1 S-A ø17/4-5mm x4	B1 B ø17/4-5mm x10	B1 Ant ø17/4-5mm x4	B1 K ø17/4-5mm x4		
N1 L=35 mm x26	M1 12x15 mm x30	V15 x8	S1 3,5x16 mm x22	E1 8x30 mm x24	V16 5x16 mm x8	F1 7x50 mm x10	A1 ZP x4
T1 x6	Z1 x70	P3 L=350 mm x3	R1 6x8 mm x12	V25 x1	E3 8x50 mm x2	F3 x1	N4 L=62 mm x2

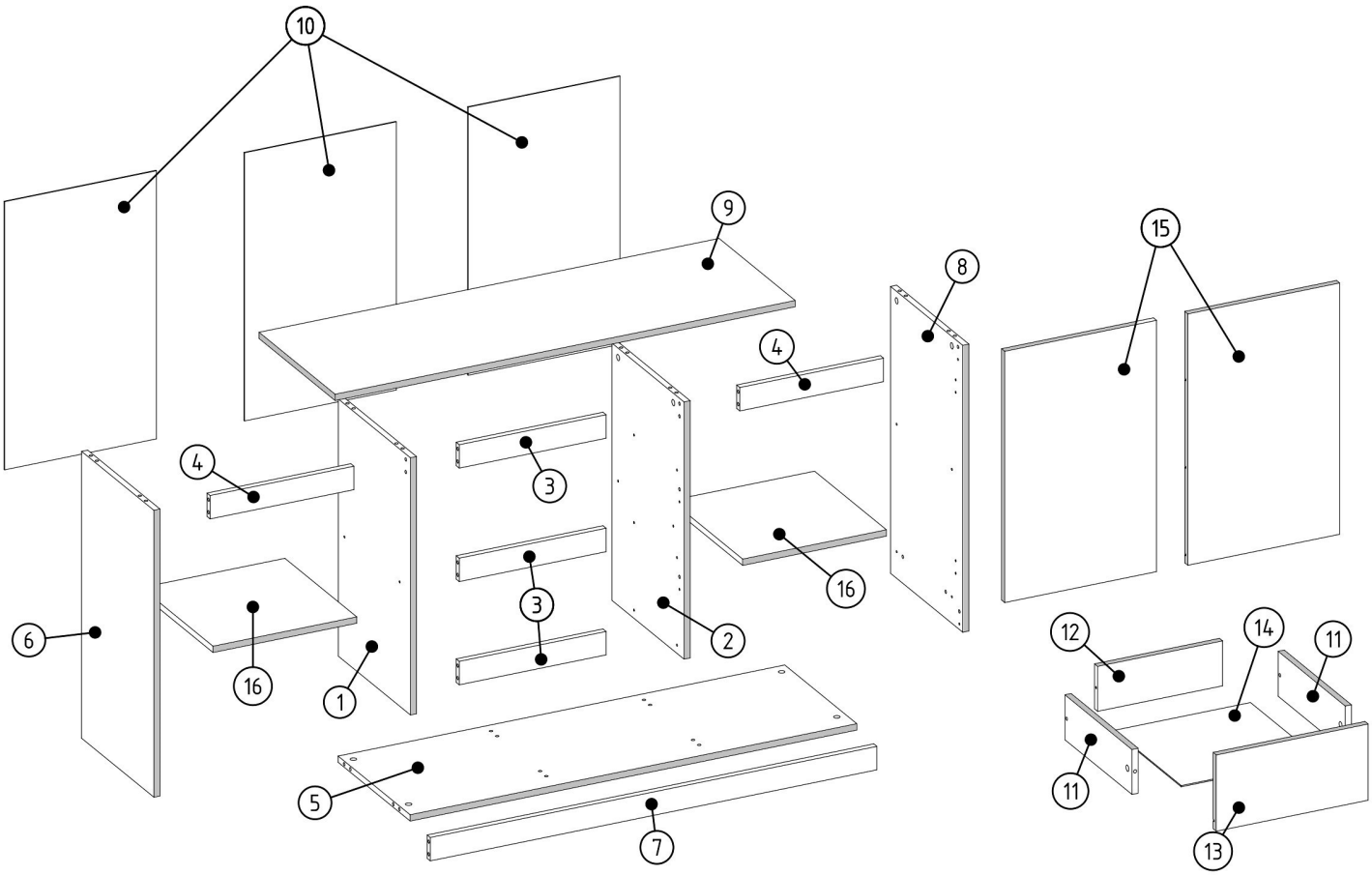

000070	16	2	
000080	15	2	
000058	14	3	
000079	13	3	
000042	12	3	
000053	11	6	
000148	10	3	
000244	9	1	
000173	8	1	
000239	7	1	
000175	6	1	
000240	5	1	
000069	4	2	375x60mm
000074	3	3	383x60mm
000274	2	1	
000273	1	1	
ID	NUMBER	QUANTITY	

N1	M1	P3	R1	E1
		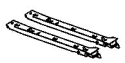		
L=35mm x2	12x15mm x2	L=350mm x3	6x8mm x6	8x30mm x4

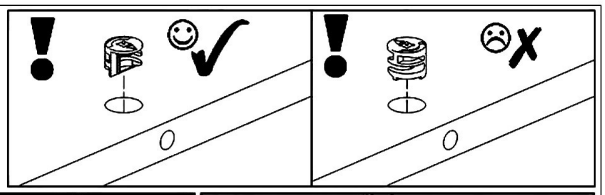

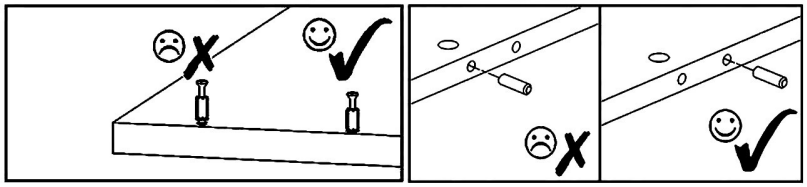

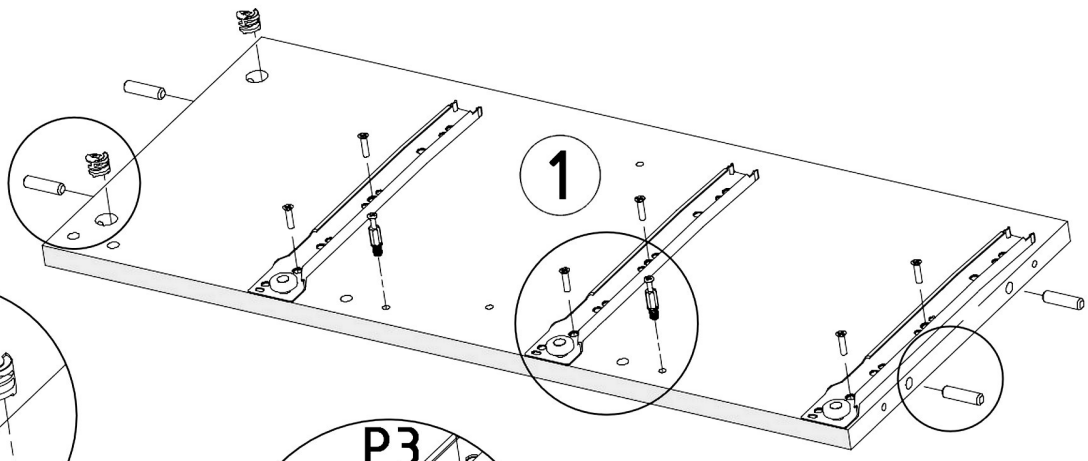

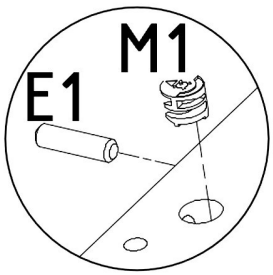

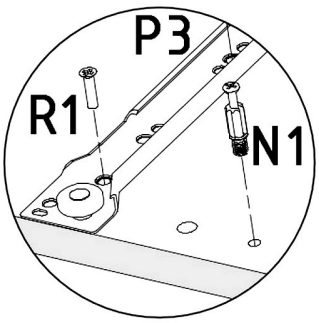

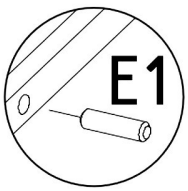



V16

5x16mm x2

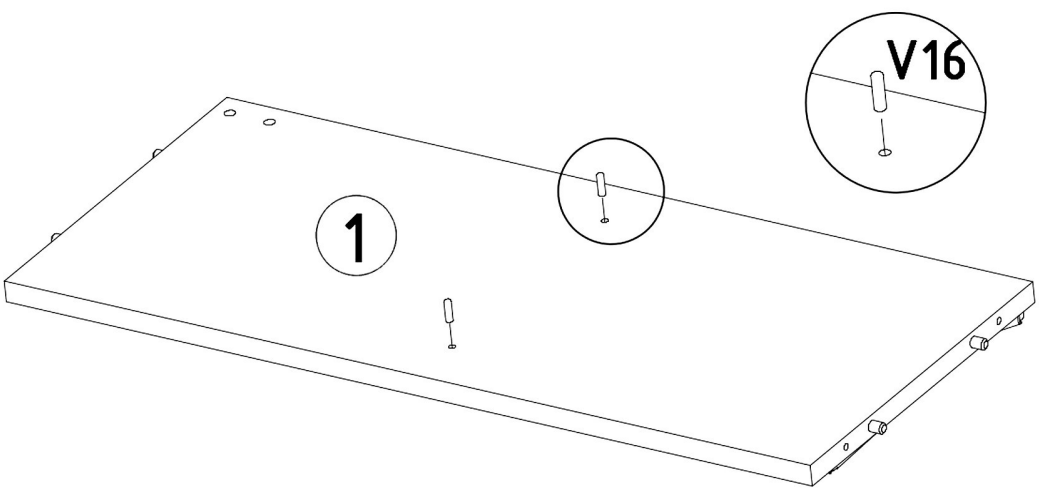

N1	M1	P3	R1	E1
		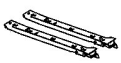		
L=35mm x2	12x15mm x2	L=350mm x3	6x8mm x6	8x30mm x4

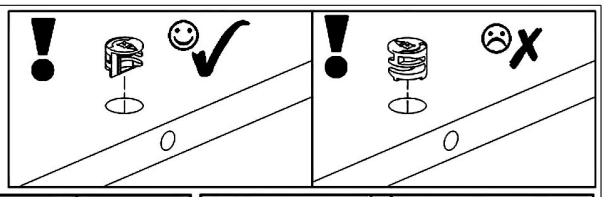

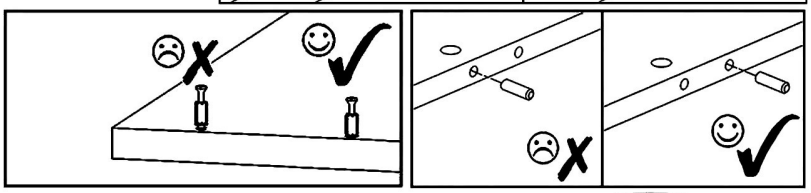

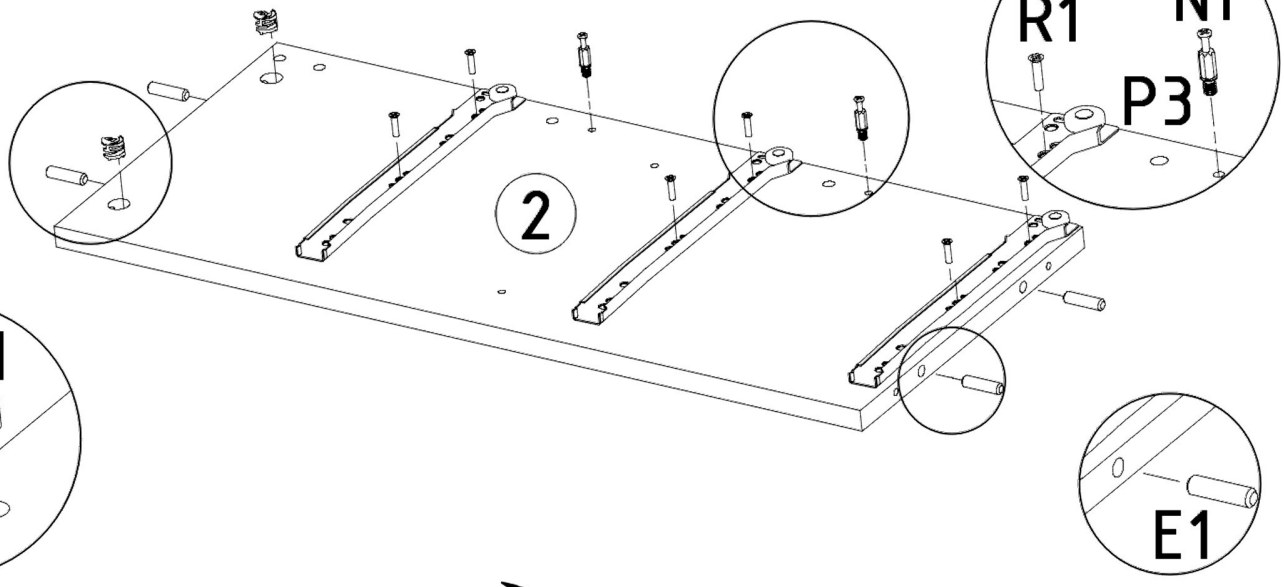

V16

5x16mm x2

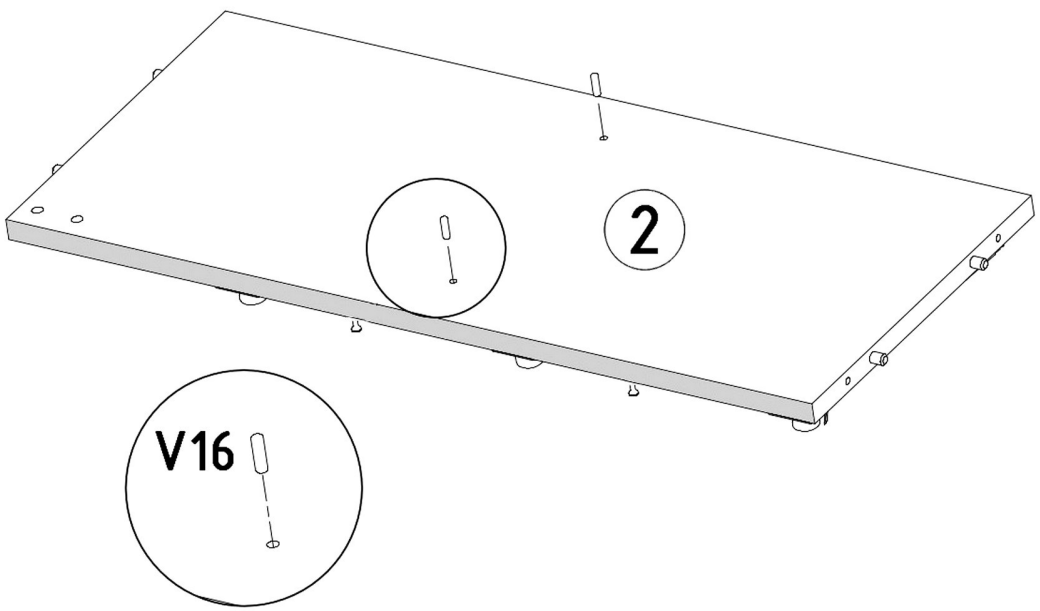

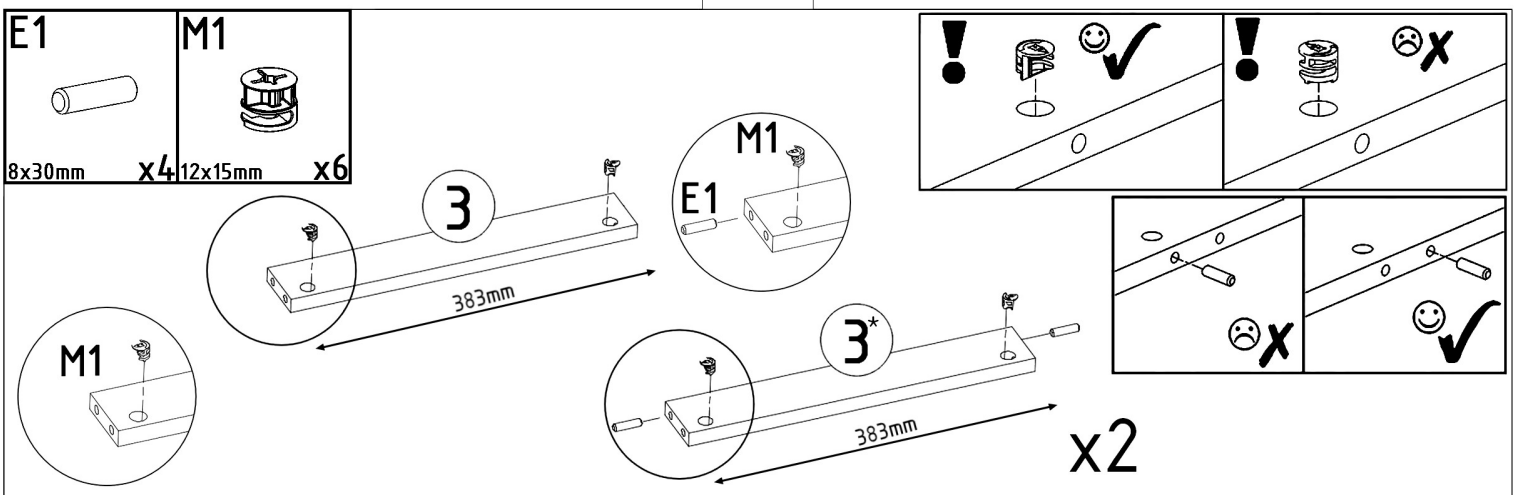
E1
8x30mm x4
M1
12x15mm x6
3
383mm
M1
E1
M1
3*
383mm
x2

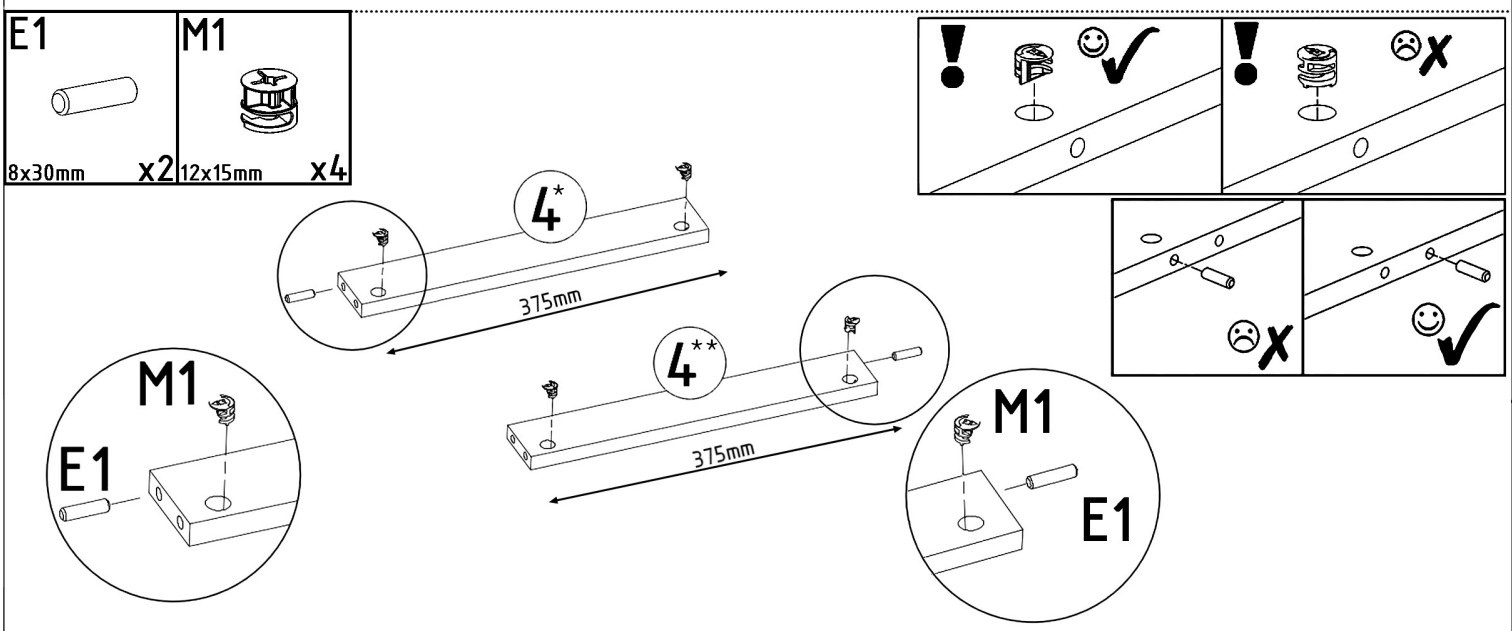
E1
8x30mm x2
M1
12x15mm x4
4*
375mm
4**
375mm
M1
E1
M1
E1

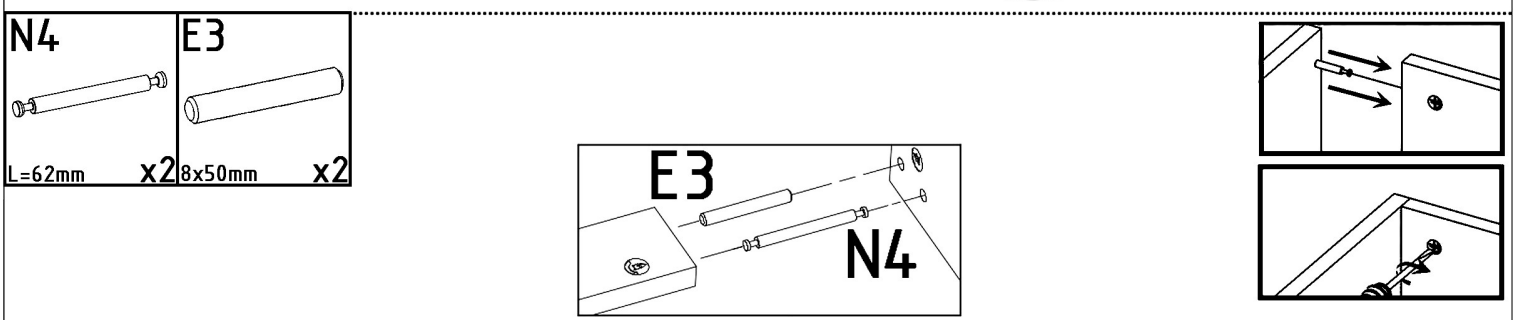
N4
L=62mm x2
E3
8x50mm x2
E3
N4

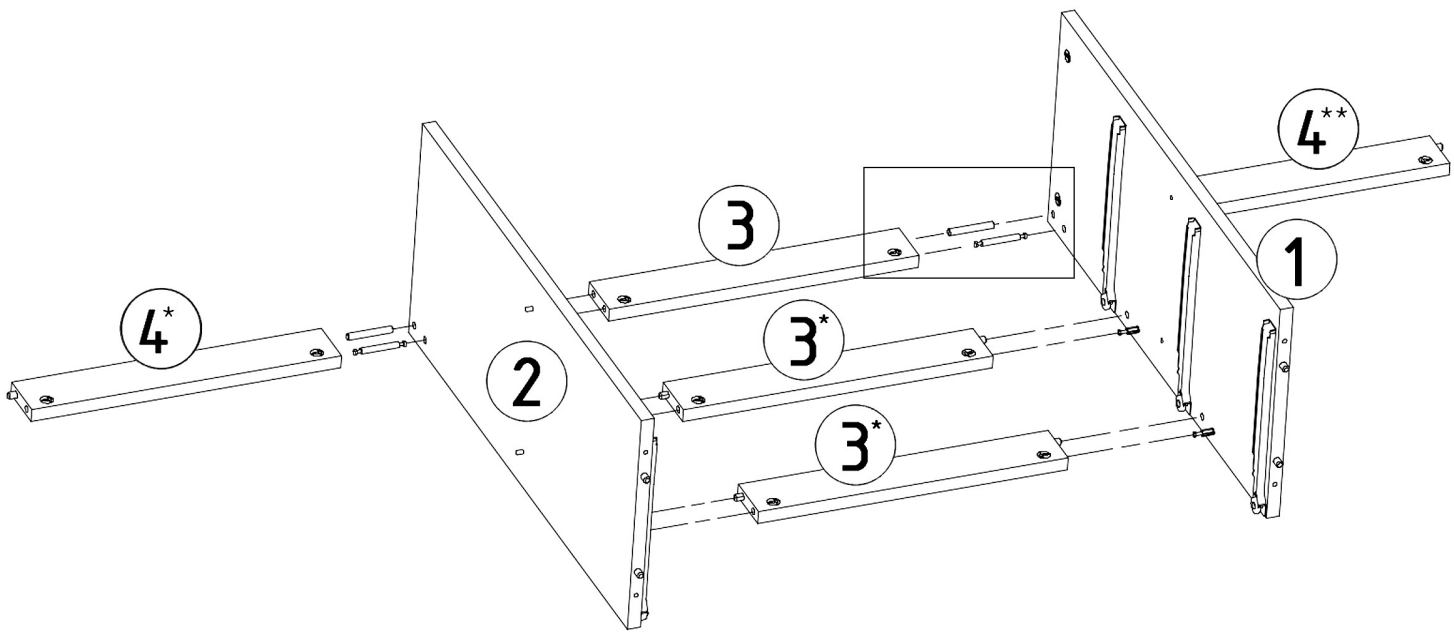
4*
2
3
3*
3*
1
4**

E1	M1
	
8x30mm x4	12x15mm x4

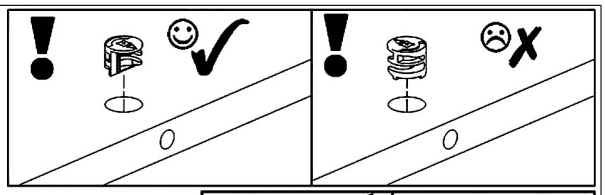

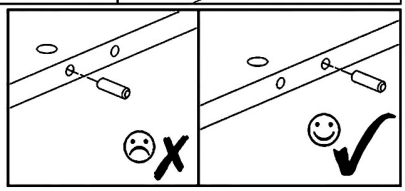

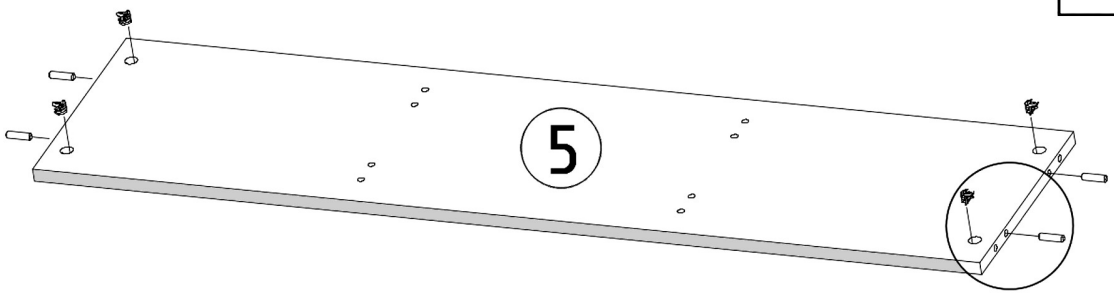

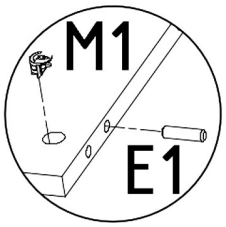

F1	F3
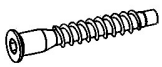	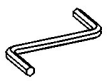
7x50mm x4	Hex 4mm

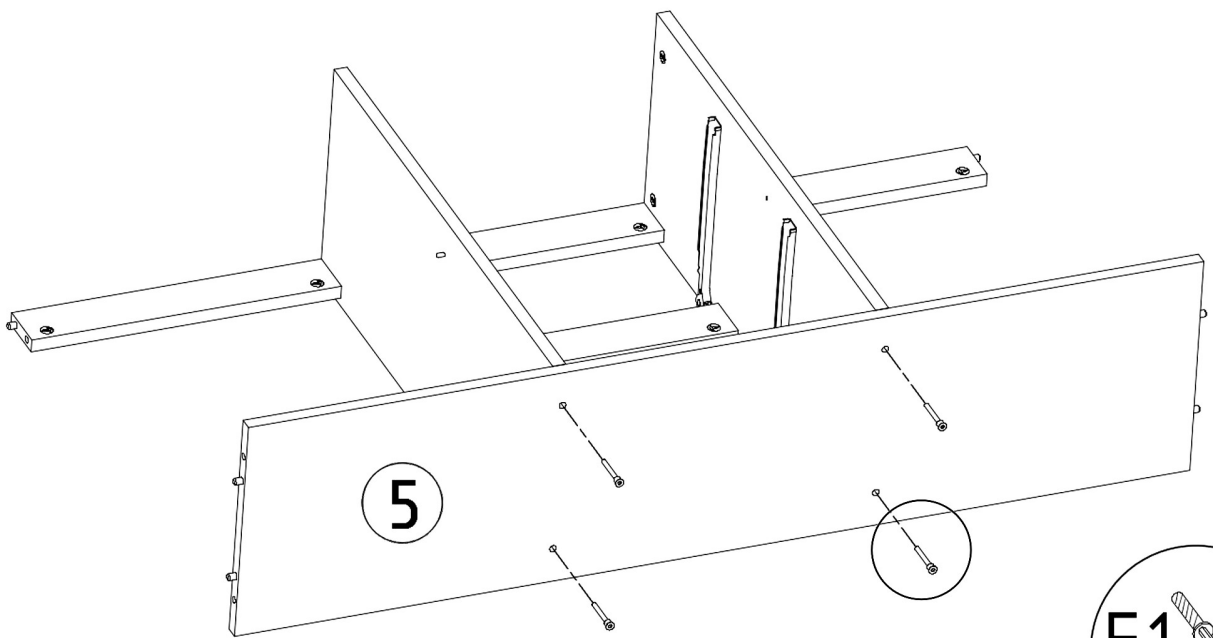



N1	M1	E1	V16	T1
L=35mm x4	12x15mm x2	8x30mm x2	5x16mm x2	x2

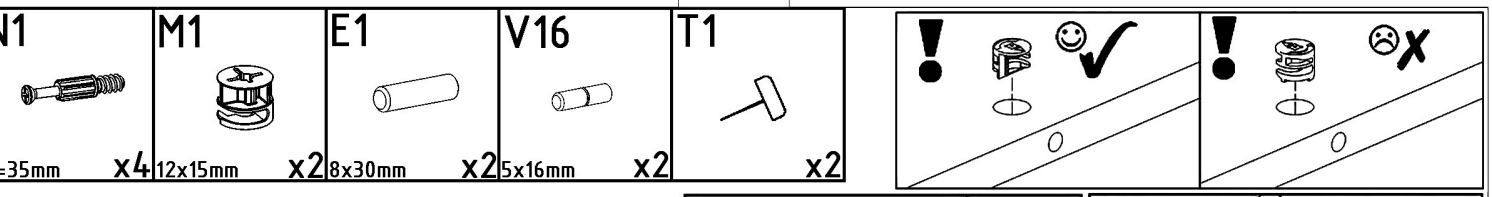

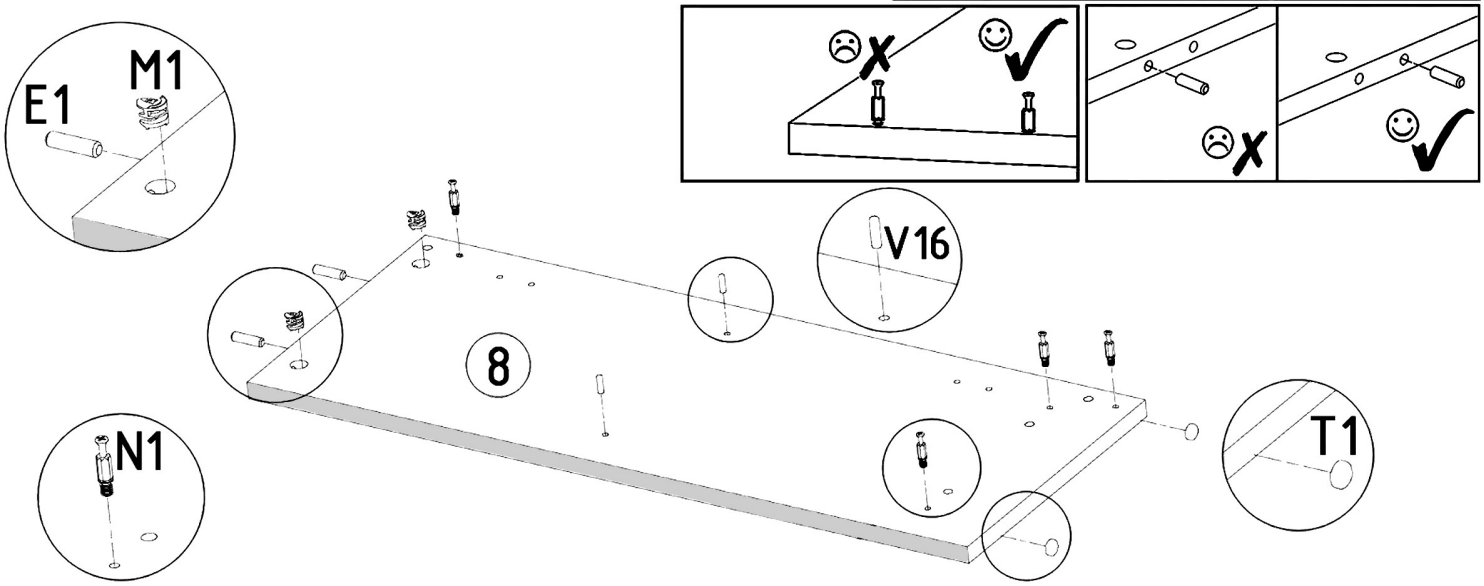

T1	E1	M1
x2	8x30mm x2	12x15mm x2

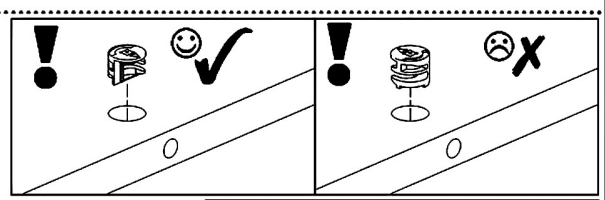

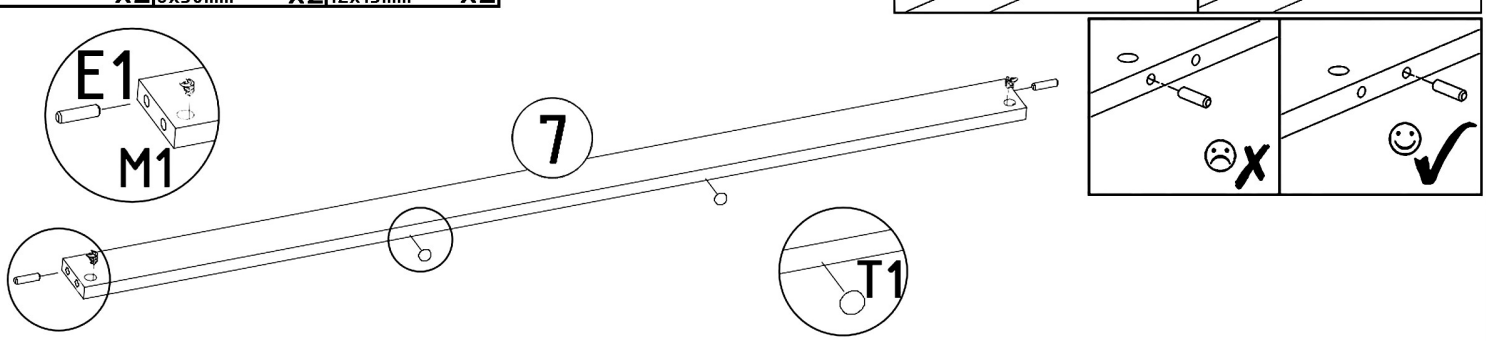

N1	M1	E1	V16	T1
L=35mm x4	12x15mm x2	8x30mm x2	5x16mm x2	x2

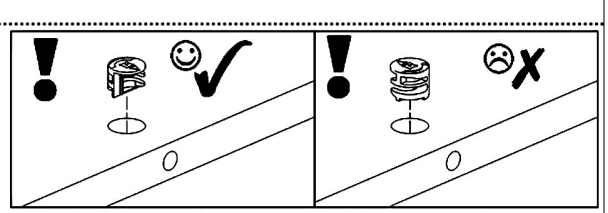

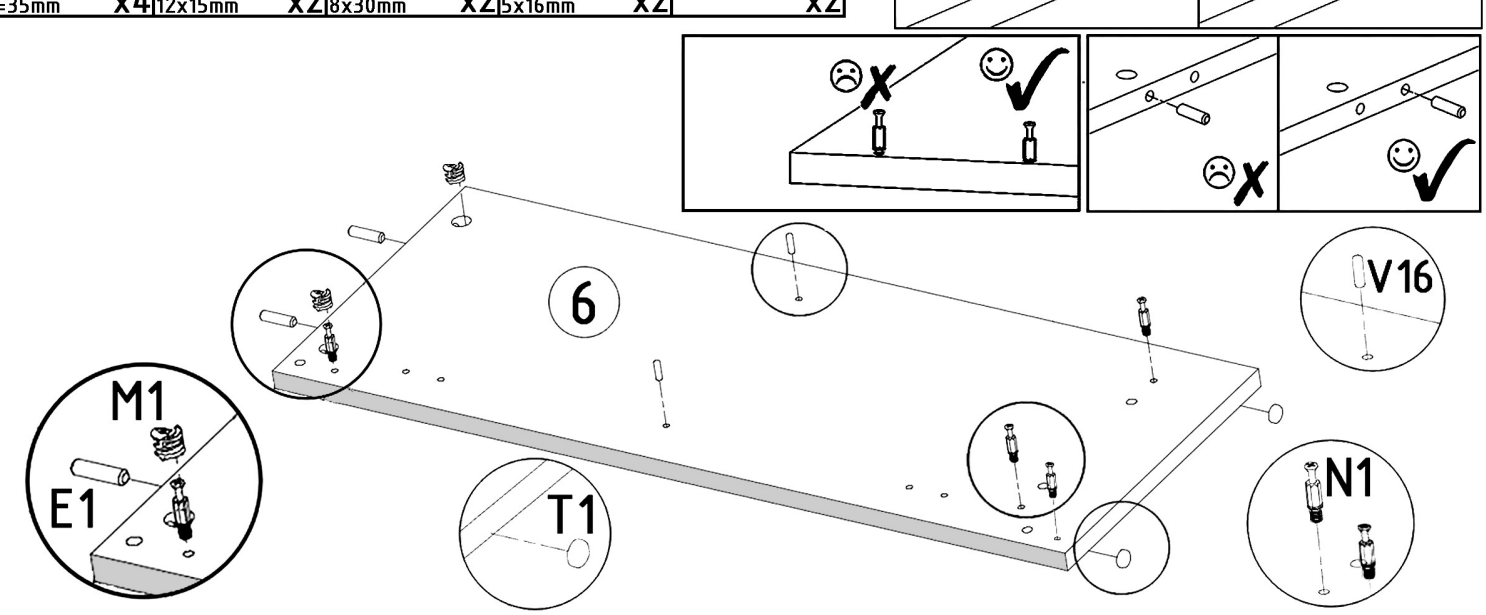

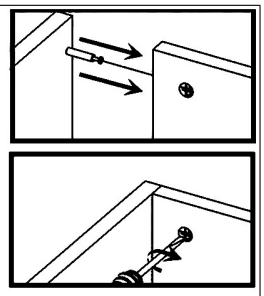

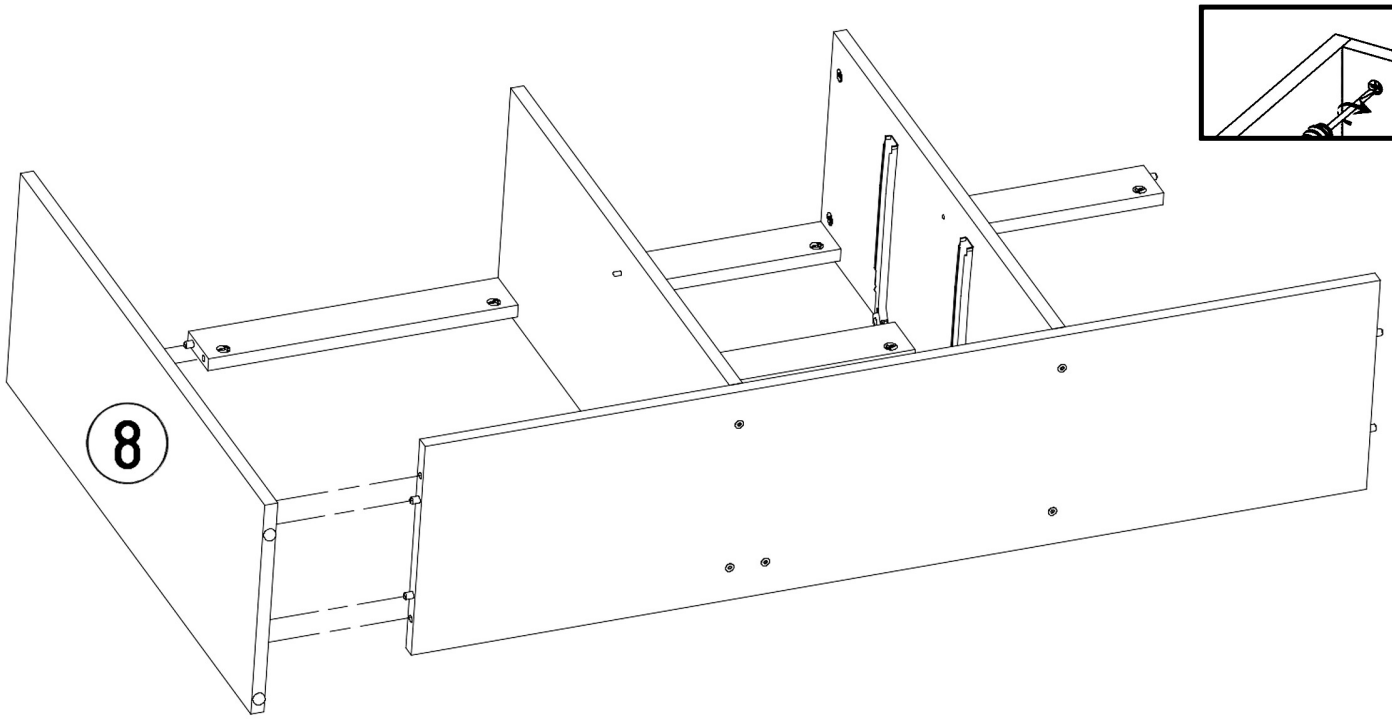
8

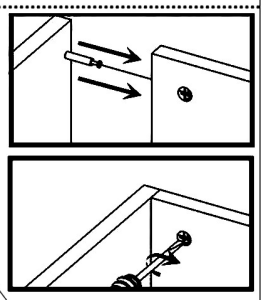

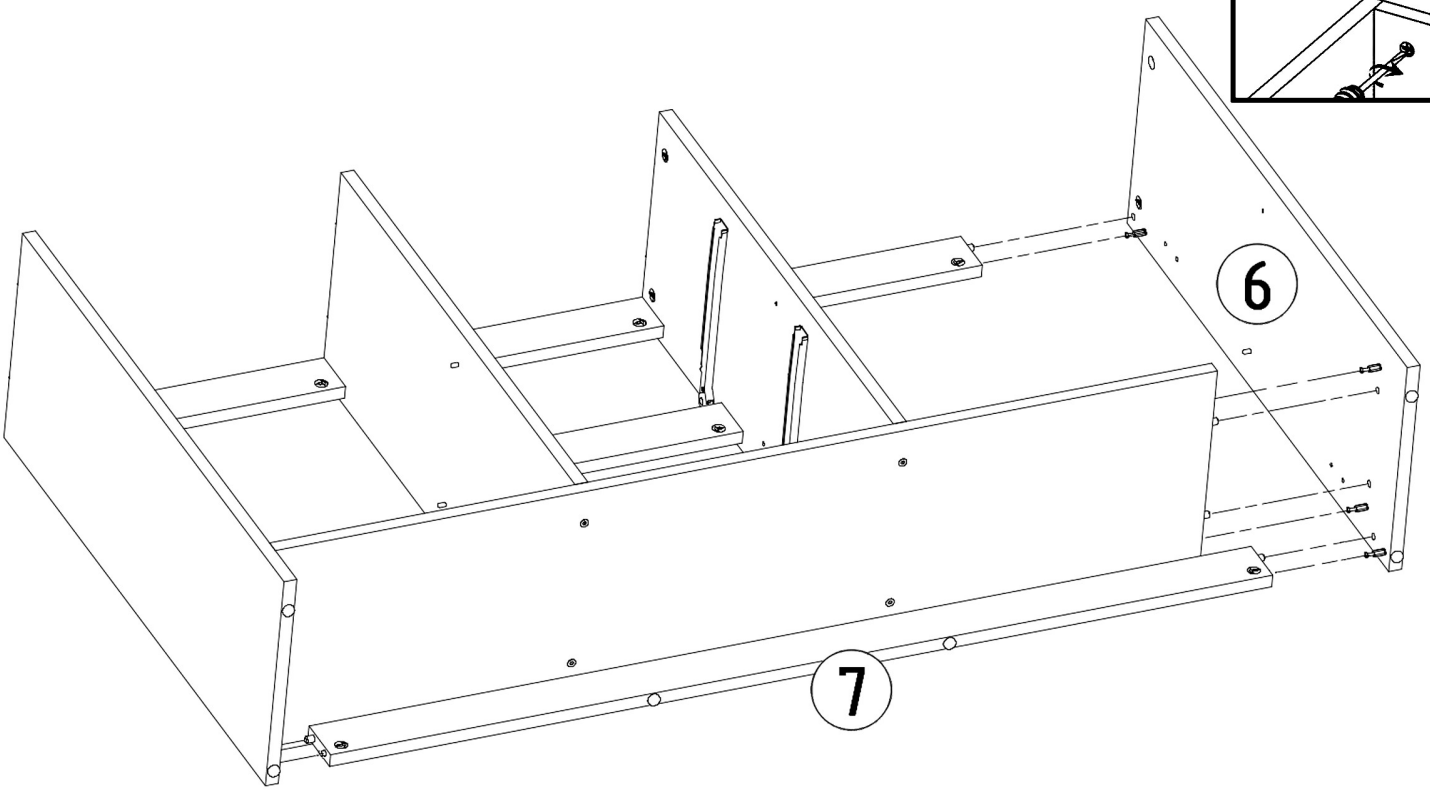
6
7

N1



L=35mm x8

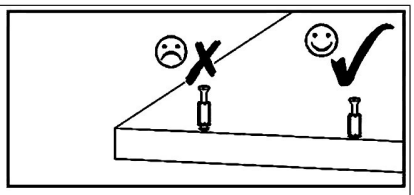

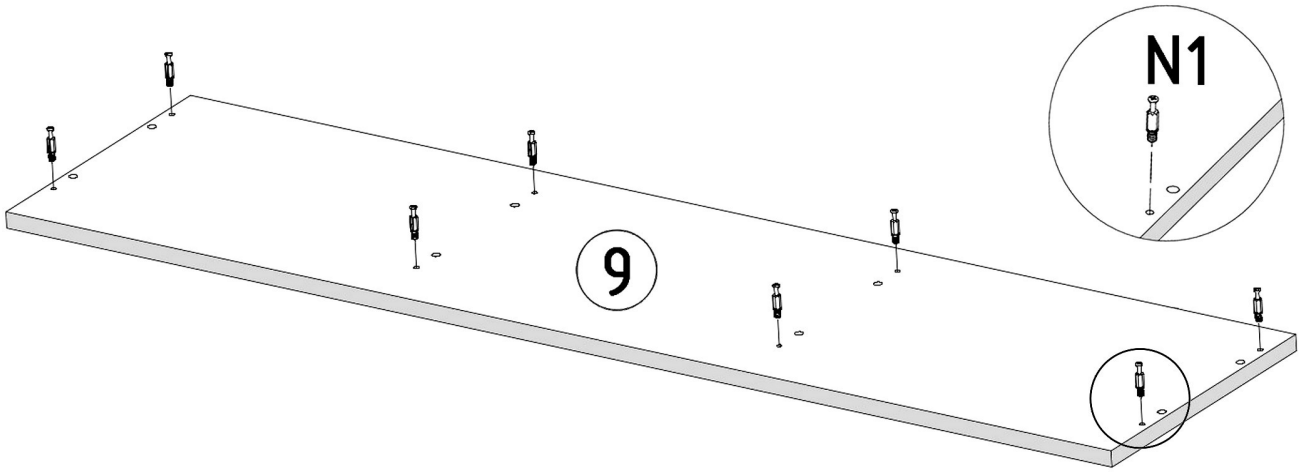

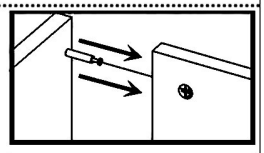

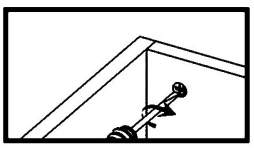

S6	V15	Z1	S1	V25
2,5x20mm x8	x8	x55	3,5x16mm x2	x1

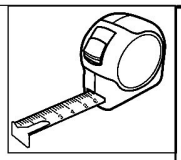

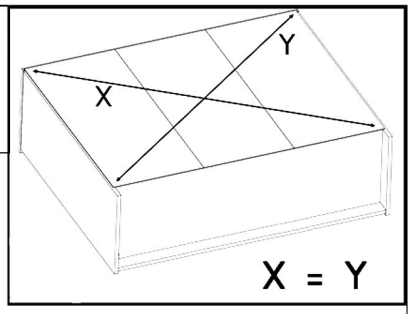

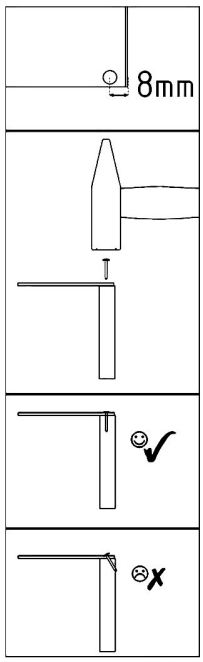





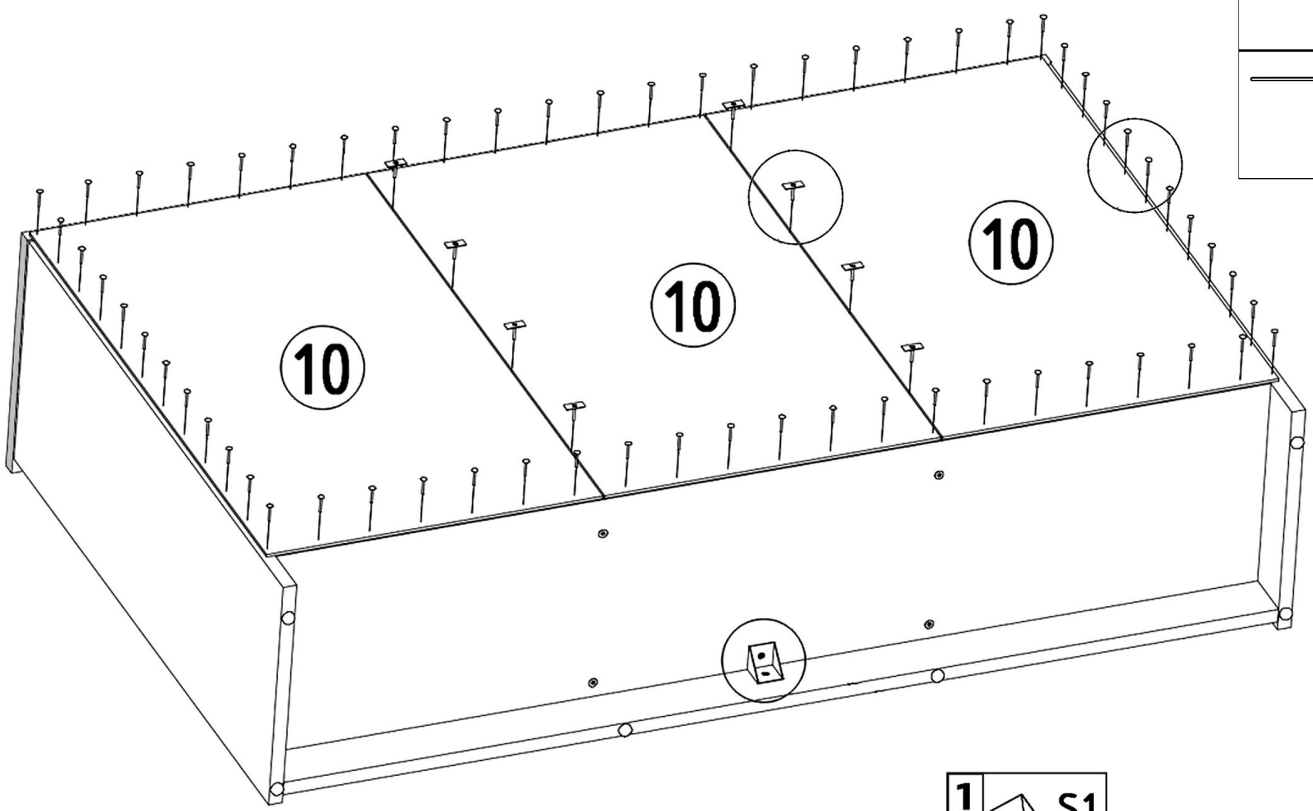

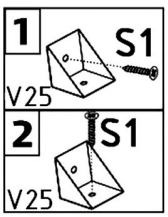

M1



12x15mm x6

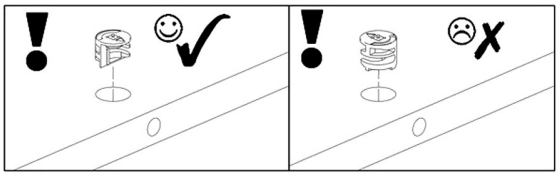

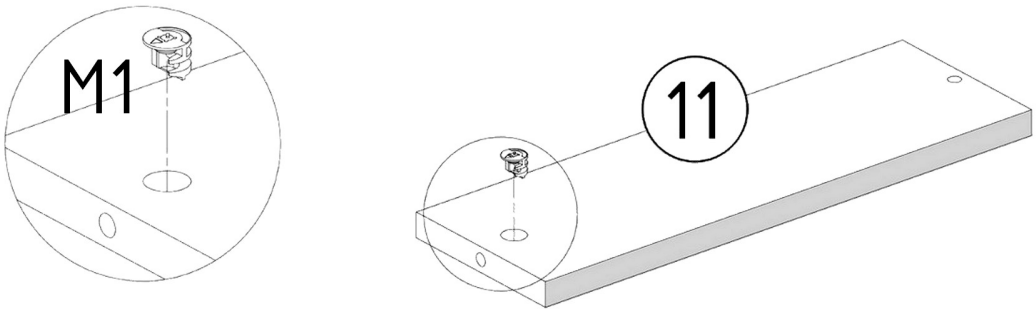

x6

F1

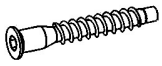

7x50mm x6

F3

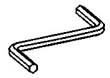

Hex 4mm



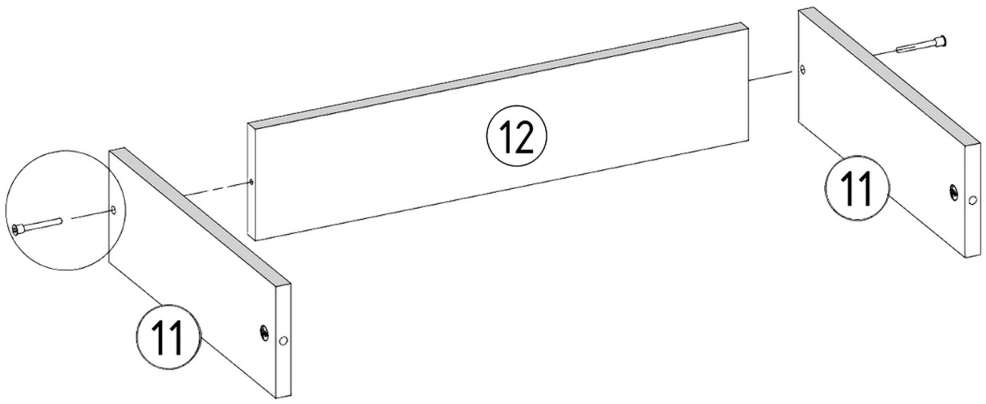

x3

N1



L=35mm x6

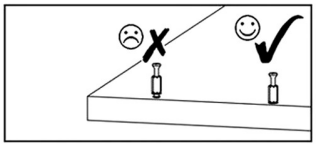

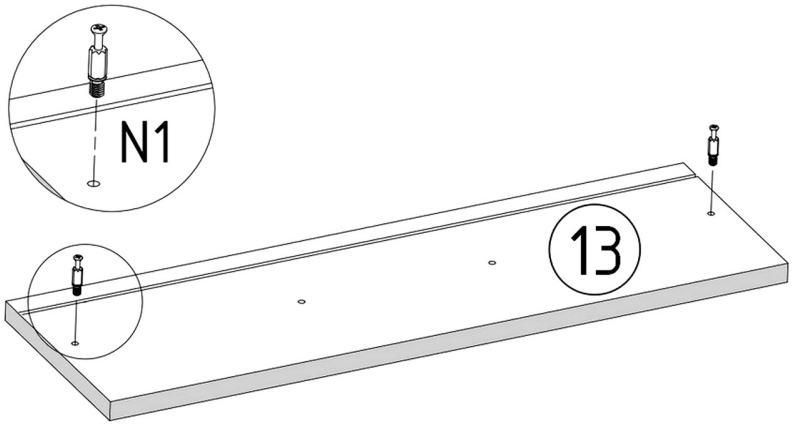

x3

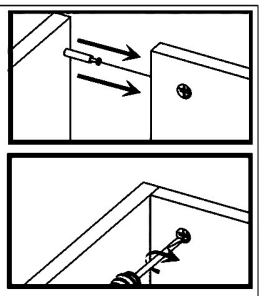

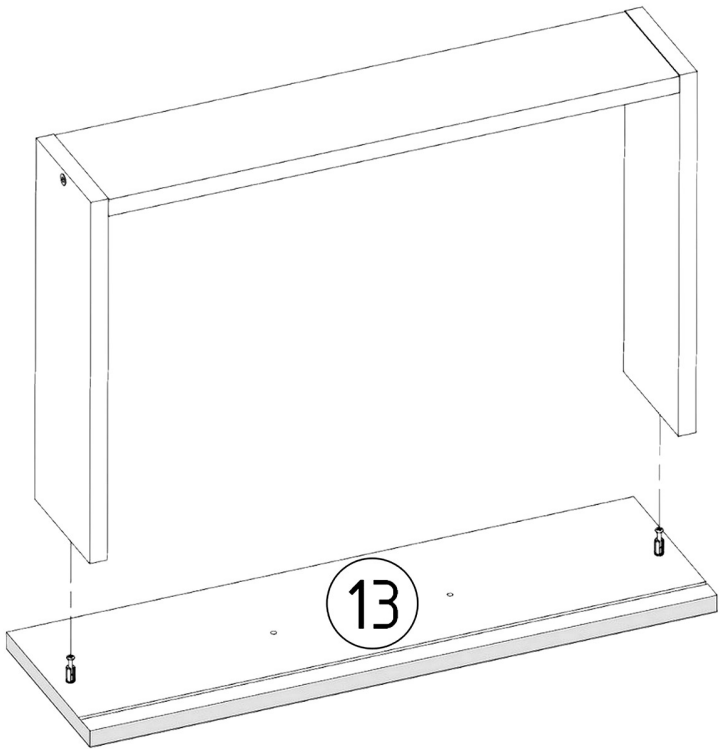

x 3

Z1	P3	S1	B1
x15	L=350mm x3	3,5x16mm x12	ø17/4mm x6

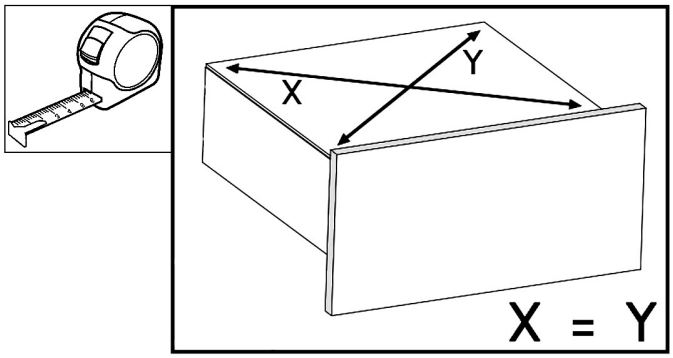

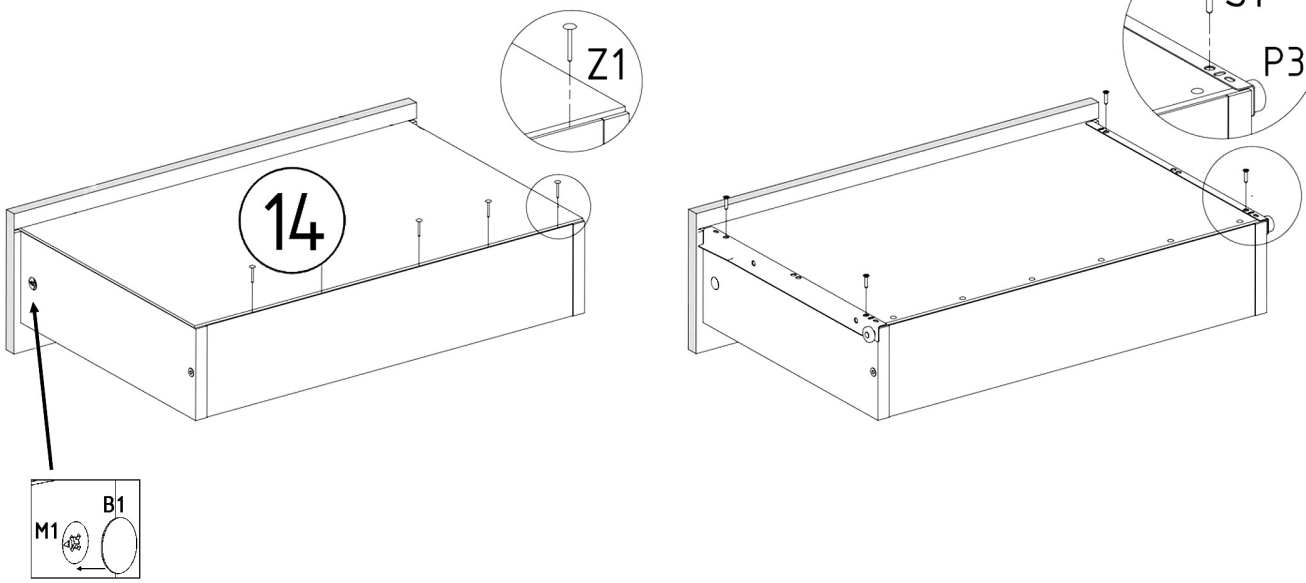

x 3

S1



3,5x16mm x8

A1



ZP x4

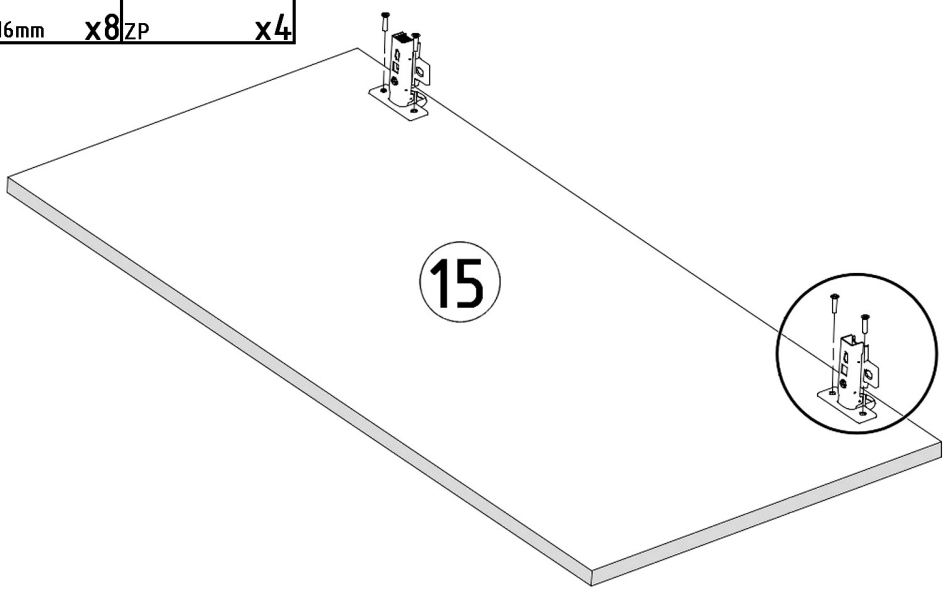

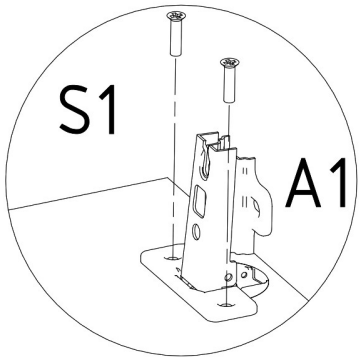

B1



ø17/4mm x4

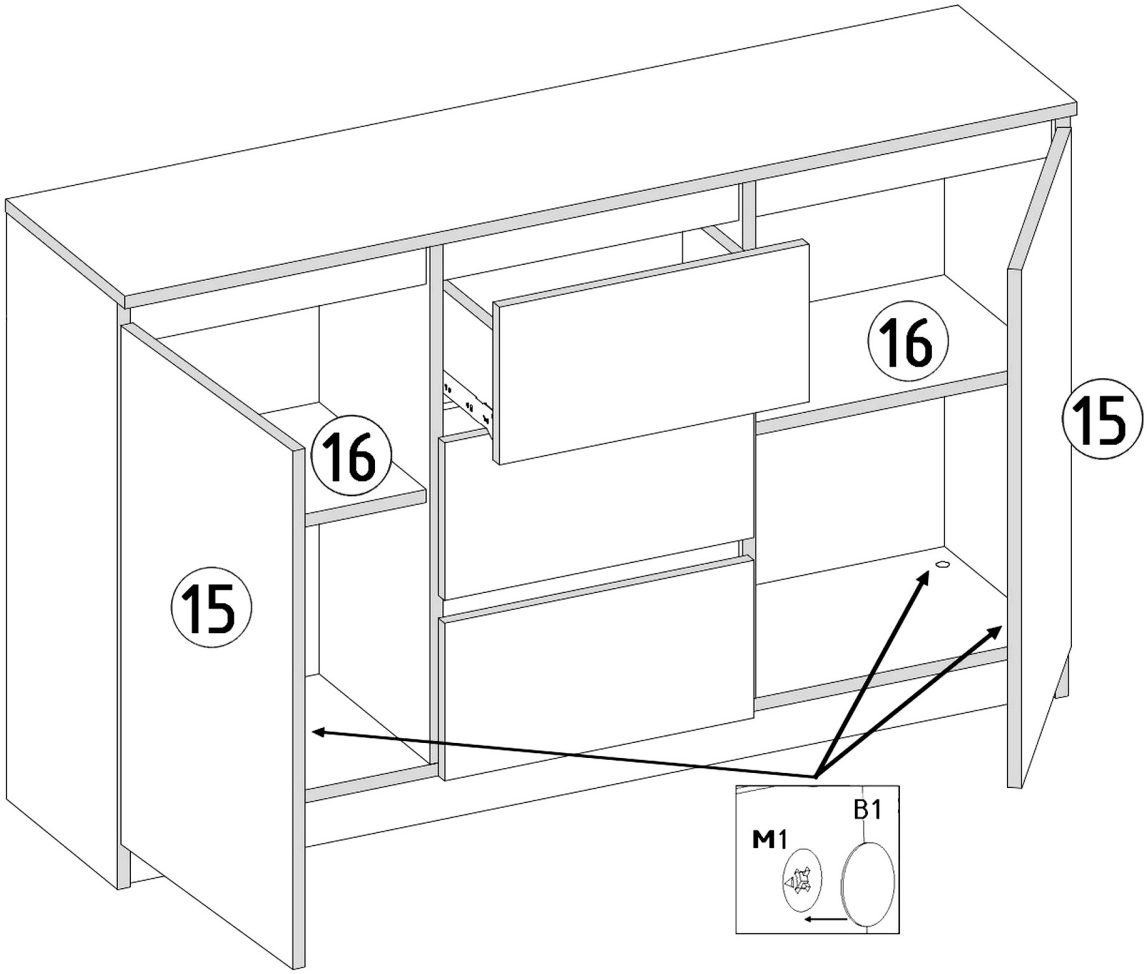

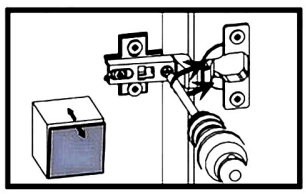

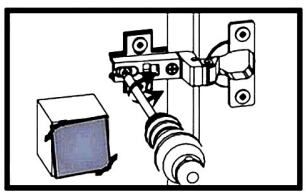

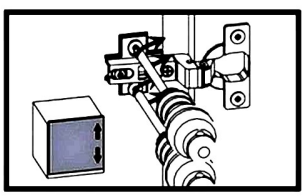

V13

x1

