INSTRUKCJA MONTAŻU

Biurko narożne 120 cm w kształcie L z 3 szufladami

Kolor: Antracyt / Dąb Artisan

Kod produktu: OR10359

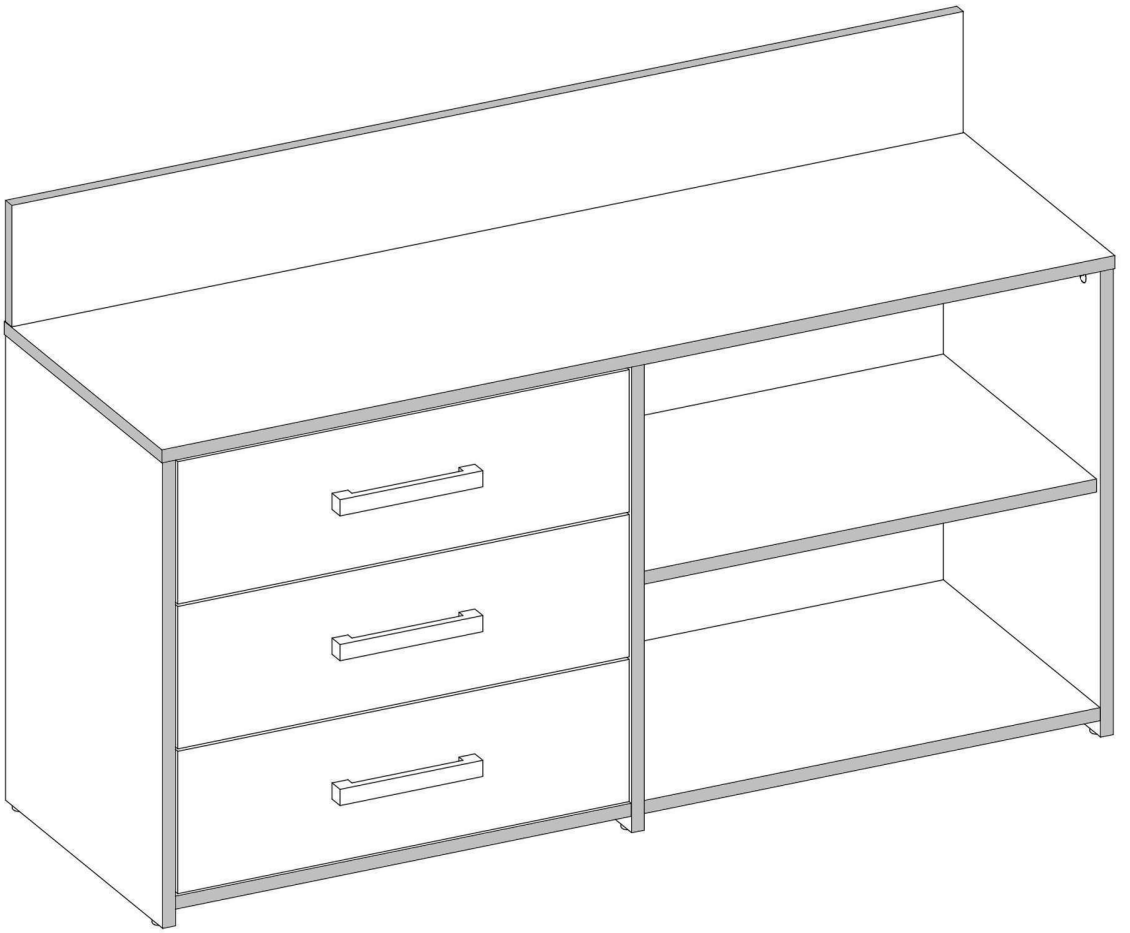

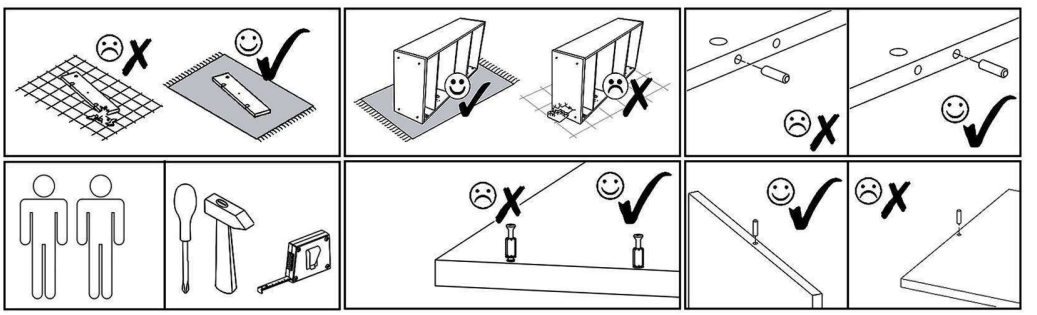

B1 B ø17/4mm x8	B1 S/A ø17/4mm x2	B1 Ant ø17/4mm x2	B1 K ø17/4mm x2	G ø17/4mm x2			
N1 L=35mm x16	M1 12x15mm x20	N4 L=62mm x2	S1 3,5x16mm x12	E1 8x30mm x10	R1 6x8mm x12	U7 DANY "Z" Z L=180/160mm x3	U7 S L=180/160mm x3
Z1 x70	F1 7x50mm x10	V16 5x16mm x4	F3 Hex 4mm x1	R8 4x30mm x6	E3 8x50mm x2	T1 x6	P3 L=350mm x3

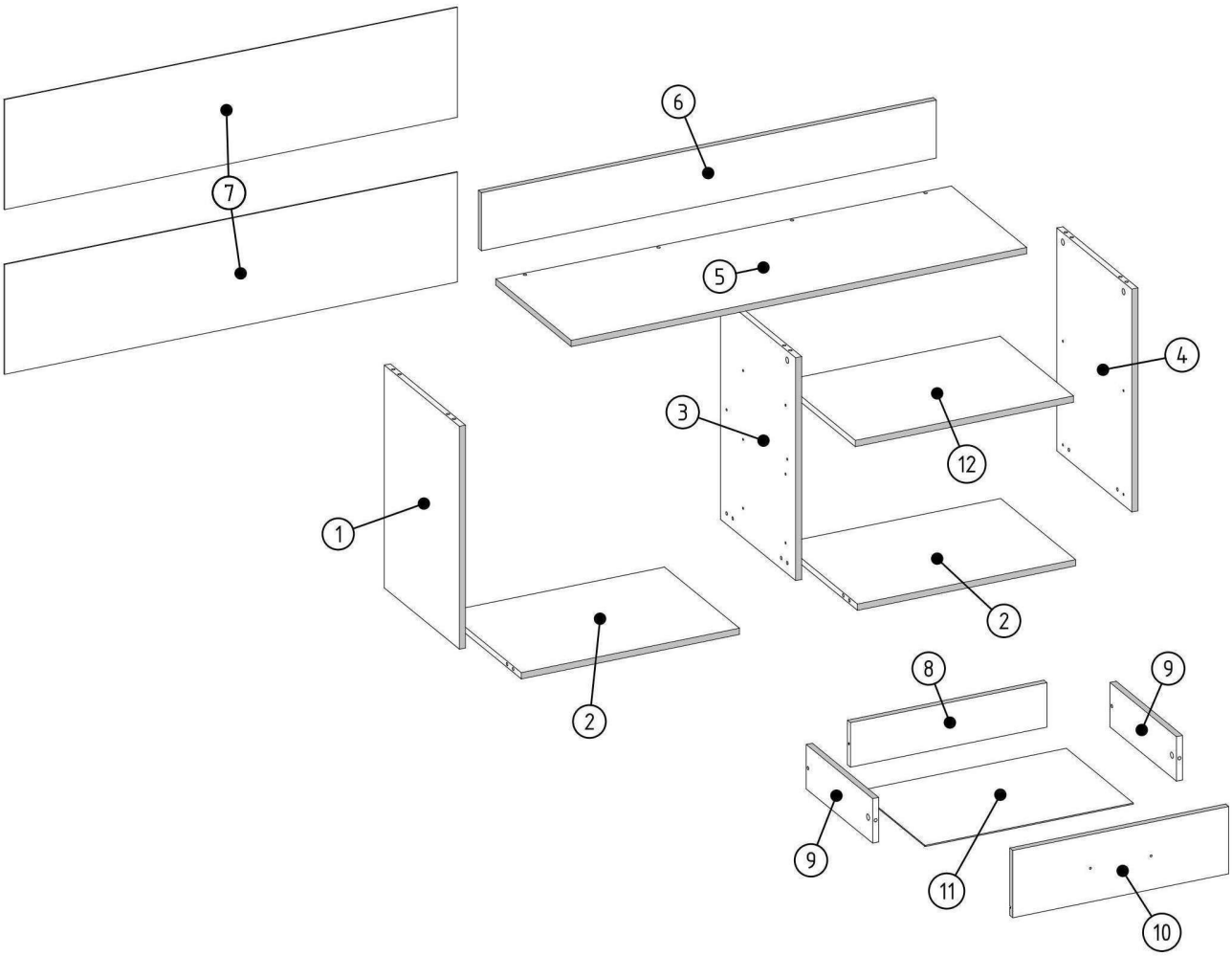

000112	12	1
000105	11	3
000110	10	3
000053	9	6
000101	8	3
000243	7	2
000268	6	1
000248	5	1
000115	4	1
000116	3	1
000113	2	2
000114	1	1
ID	NUMBER	QUANTITY

M1	N1	E1	R1	P3	T1
12x15mm x2	L=35mm x2	8x30mm x2	6x8mm x6	L=350mm x3	x2

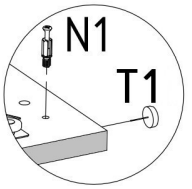

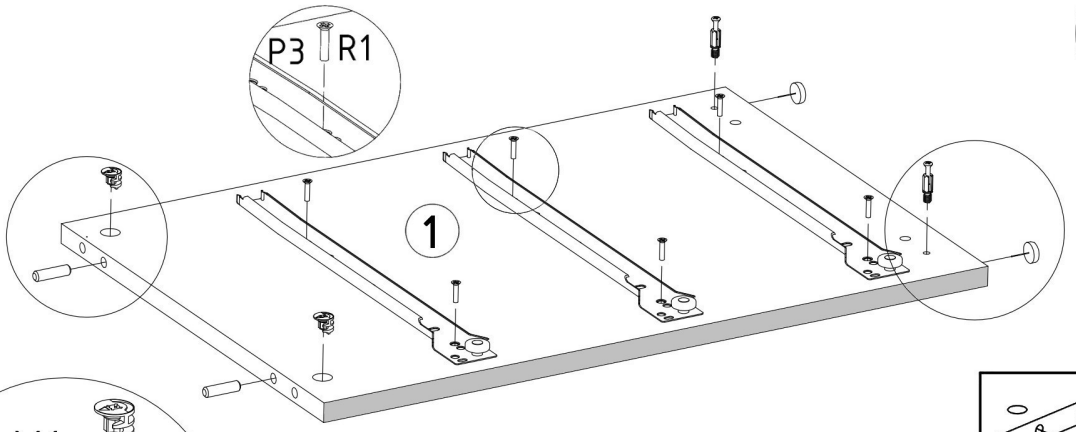

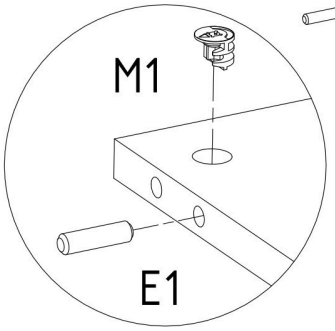

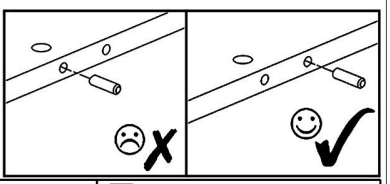

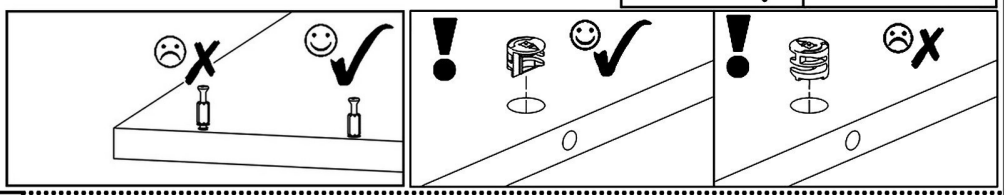

M1	E3	E1
12x15mm x8	8x50mm x2	8x30mm x4

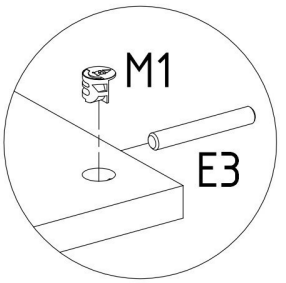

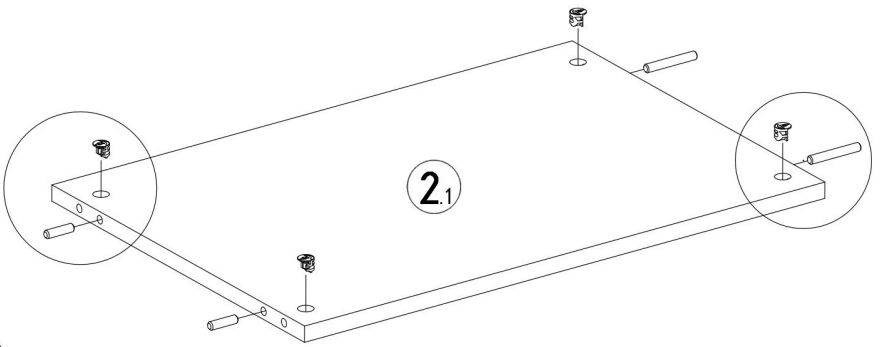

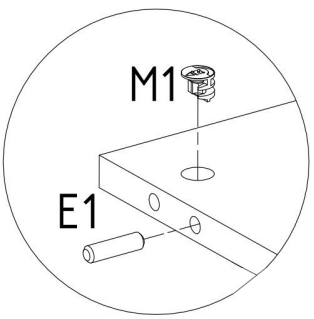

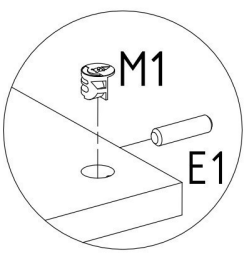

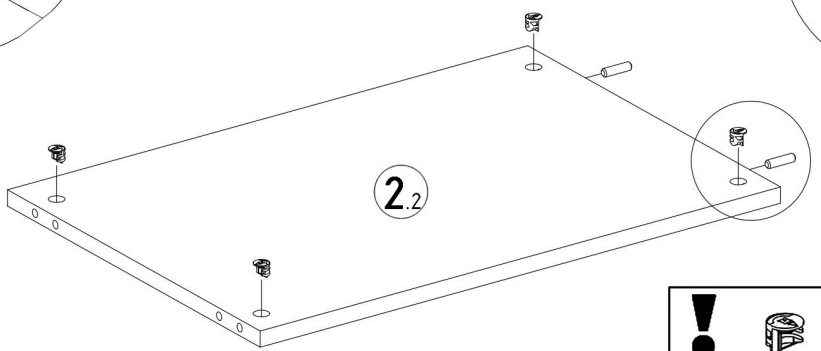

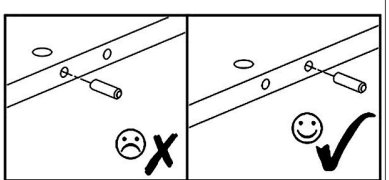

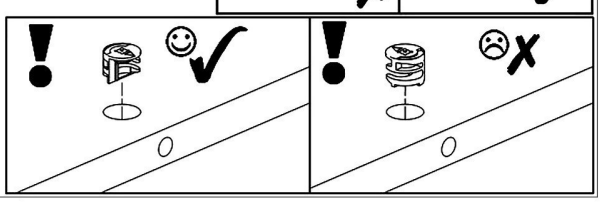

M1	T1	E1	R1	P3
12x15mm x2	x2	8x30mm x2	6x8mm x6	L=350mm x3

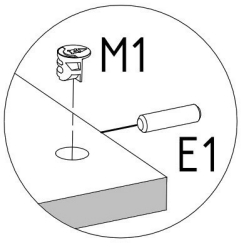

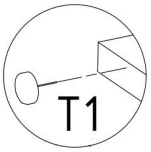

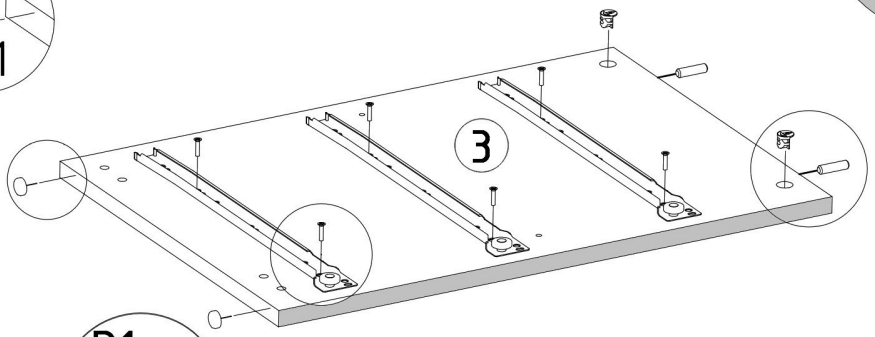

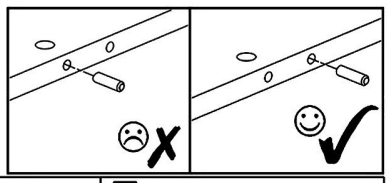

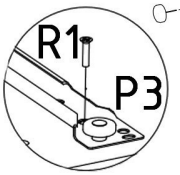

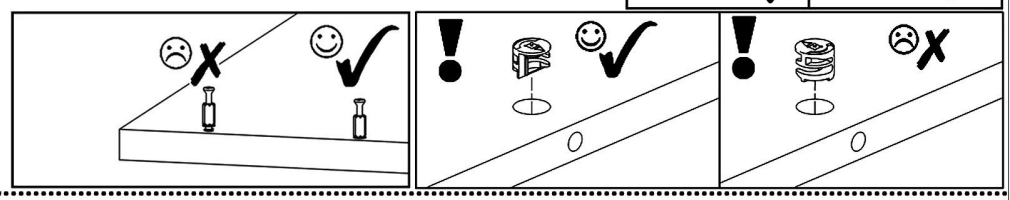

V16
5x16mm x2

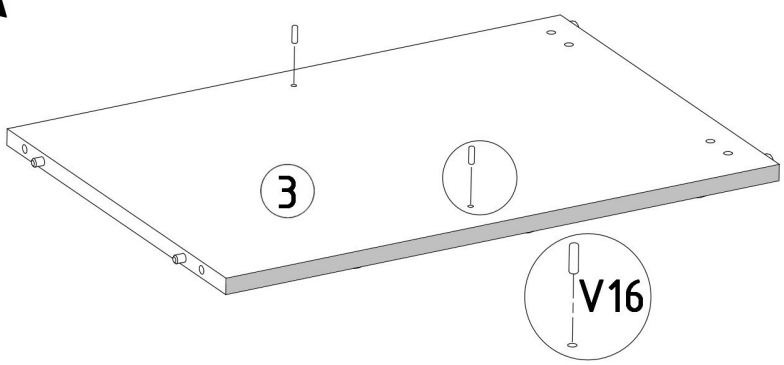

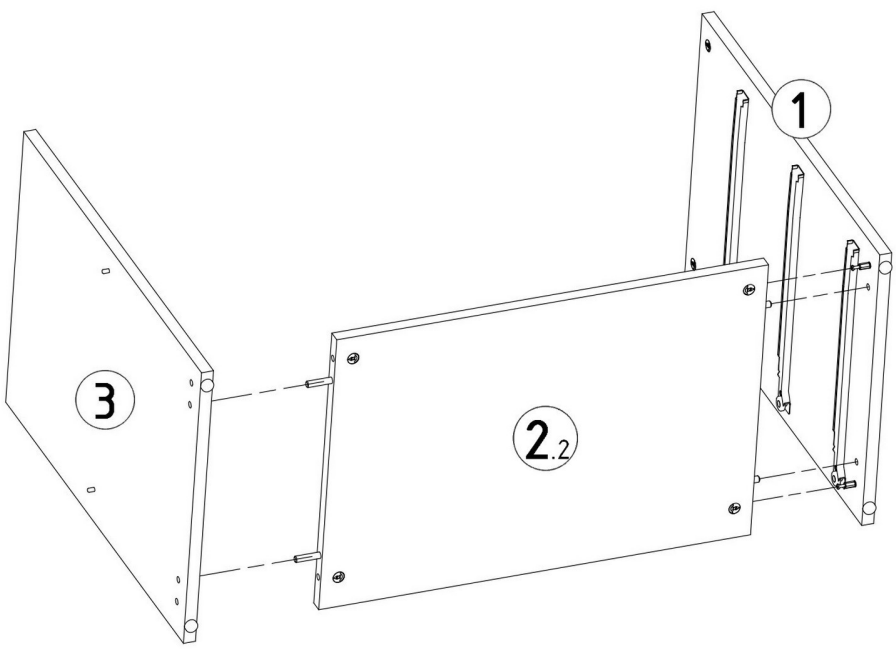

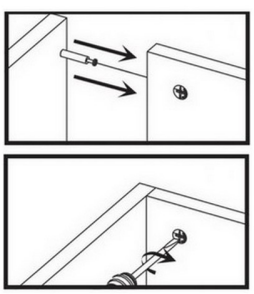

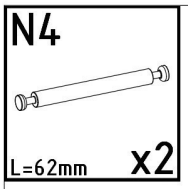
N4
L=62mm
x2

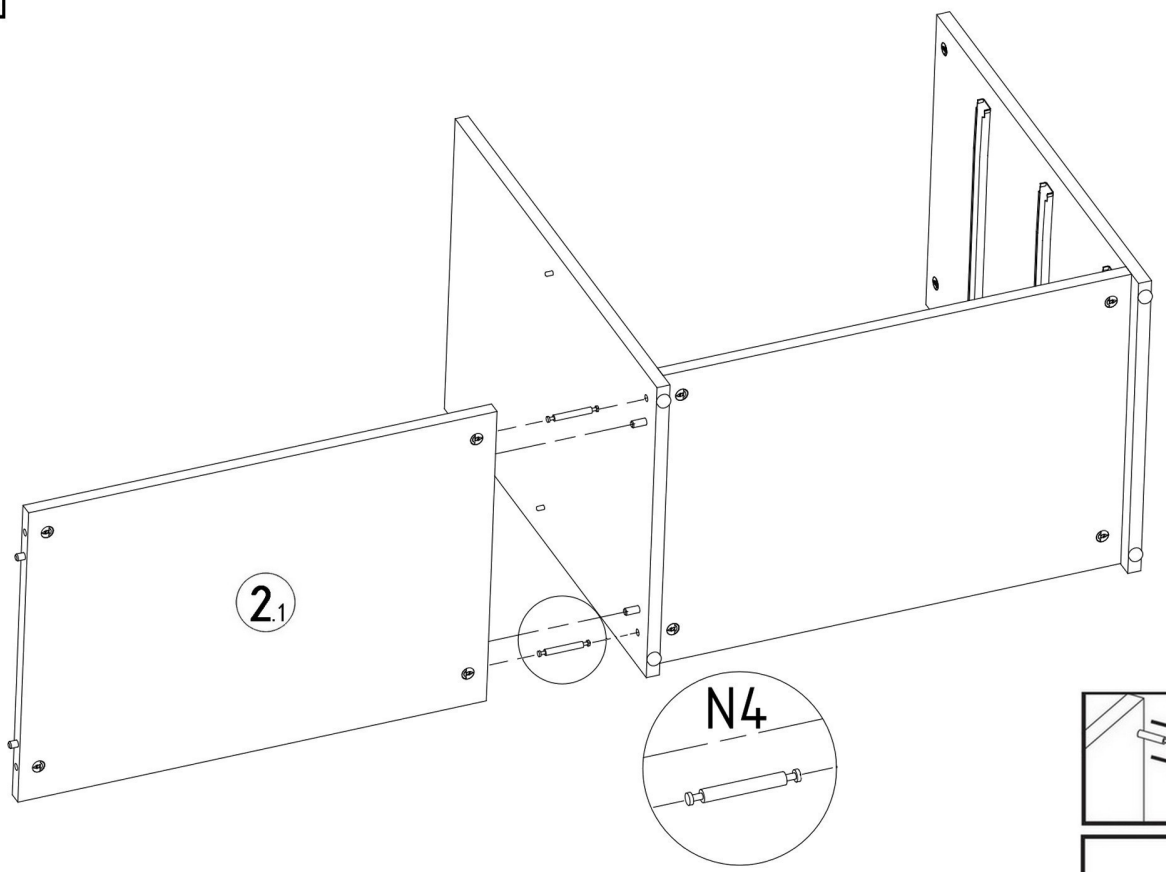
2.1
N4

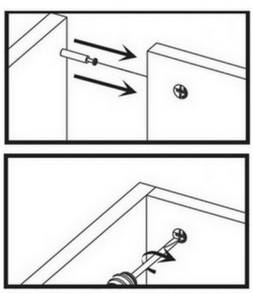

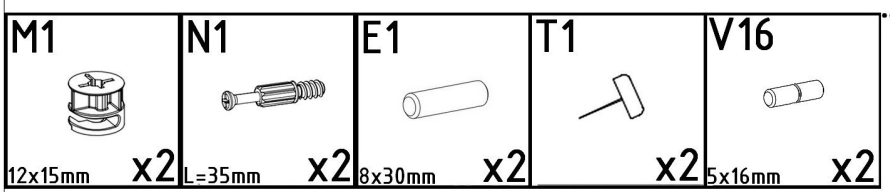
M1
12x15mm
x2
N1
L=35mm
x2
E1
8x30mm
x2
T1
x2
V16
5x16mm
x2

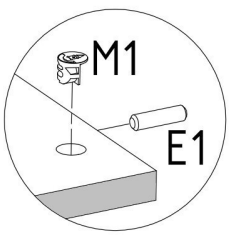
M1
E1

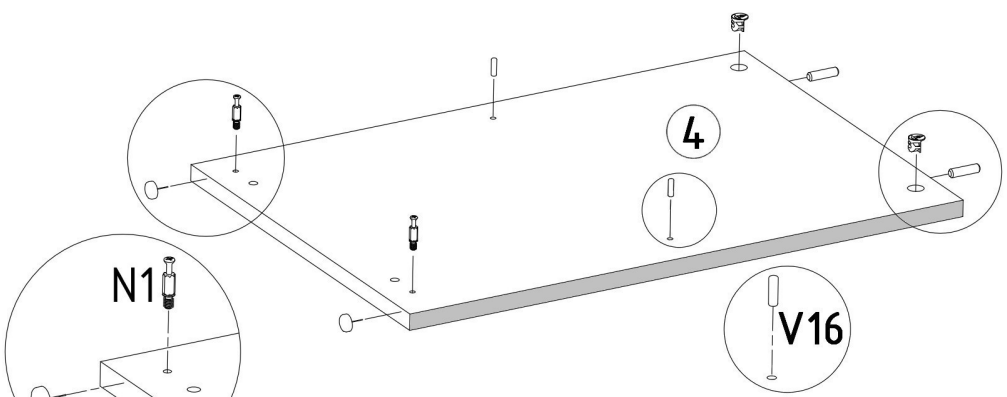
4
N1
T1
V16

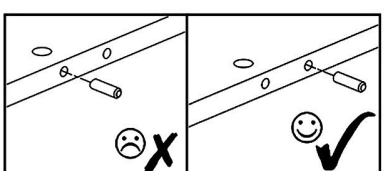

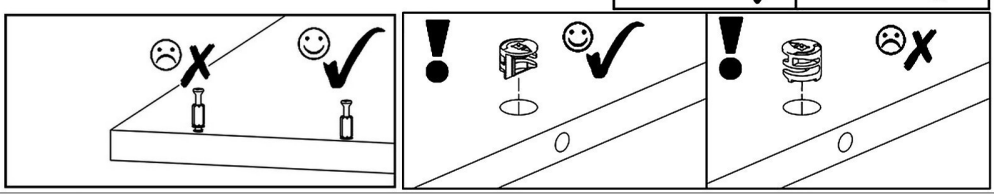

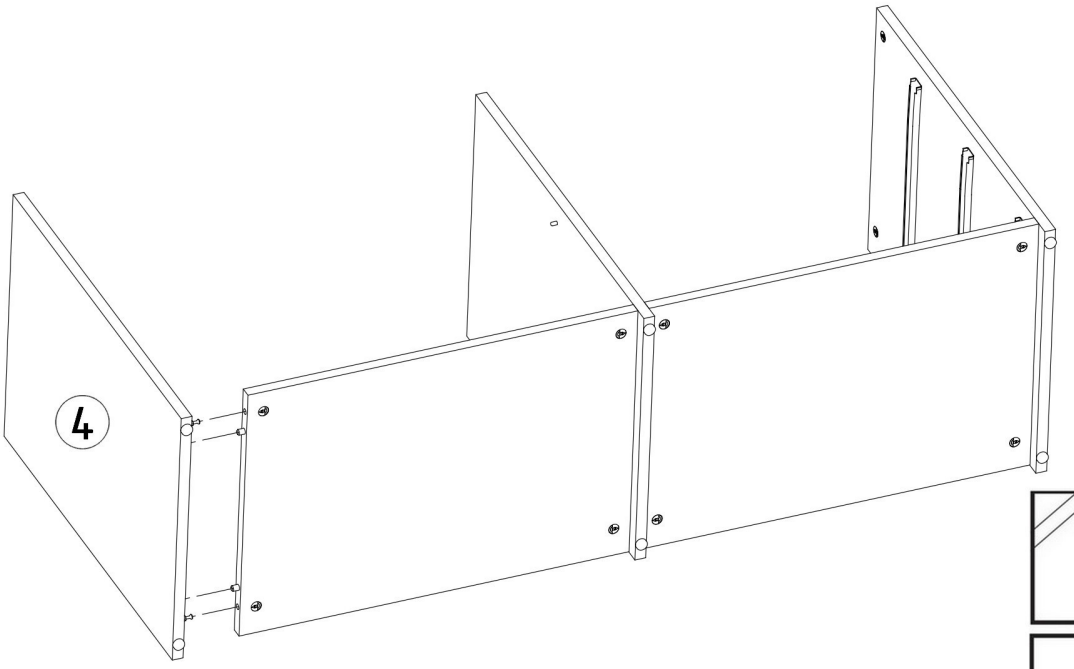

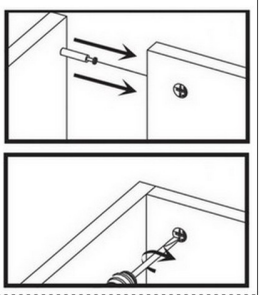

N1



L=35mm x6

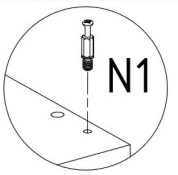

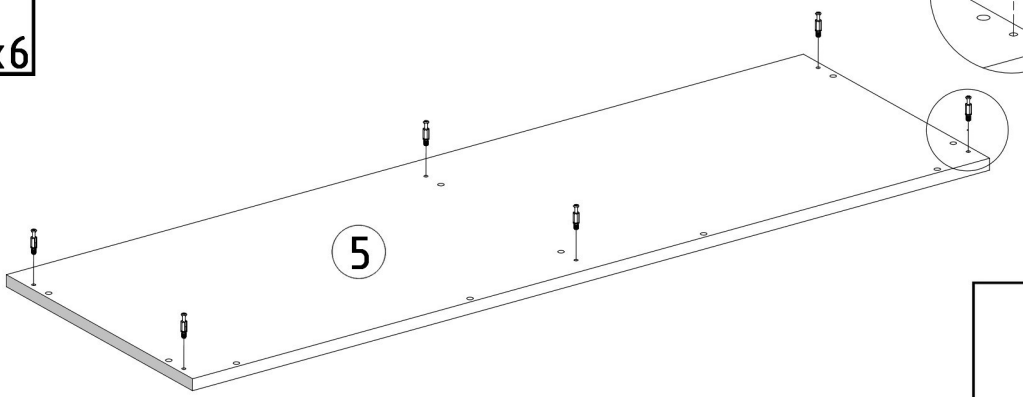

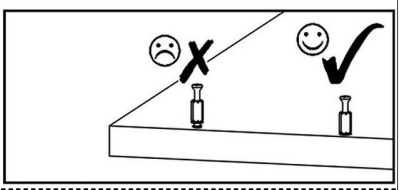

F1

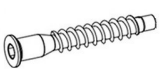

7x50mm x4

F3



Hex 4mm

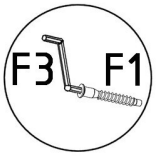

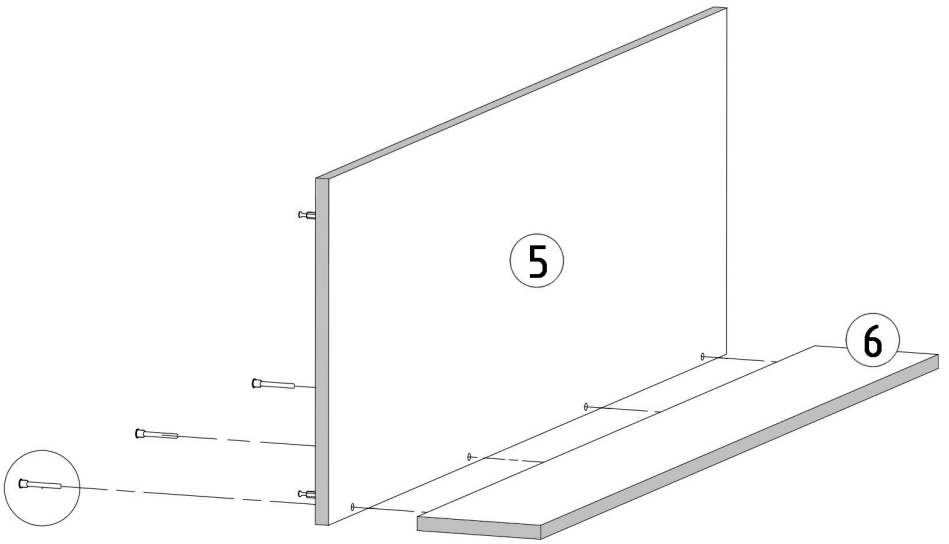

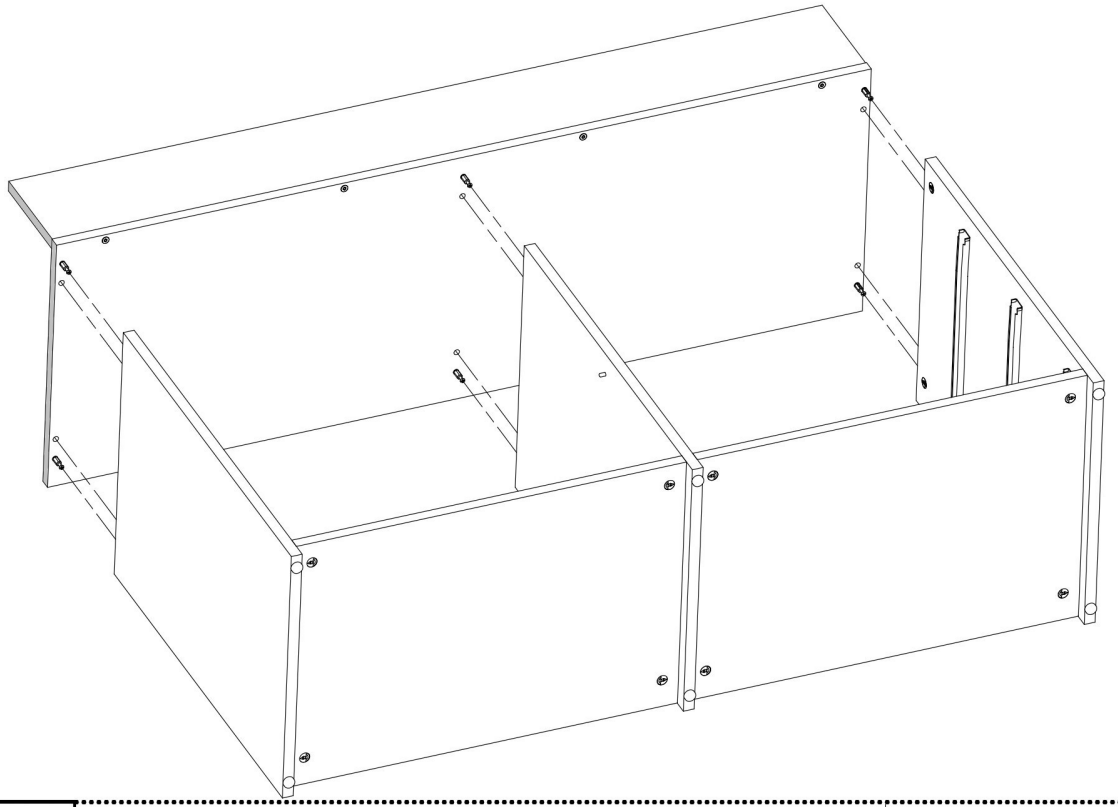

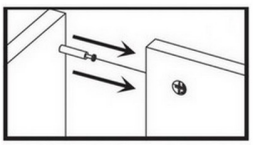

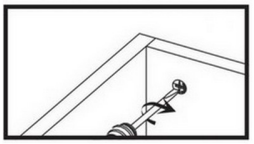

Z1



x55

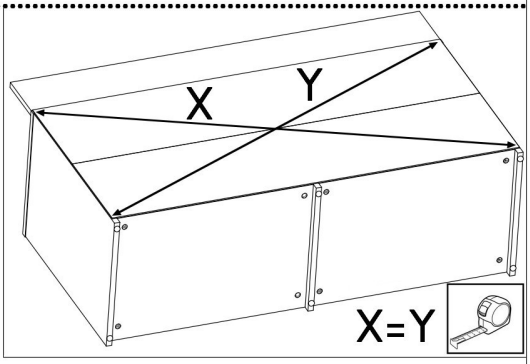

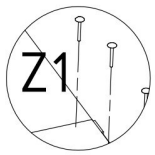

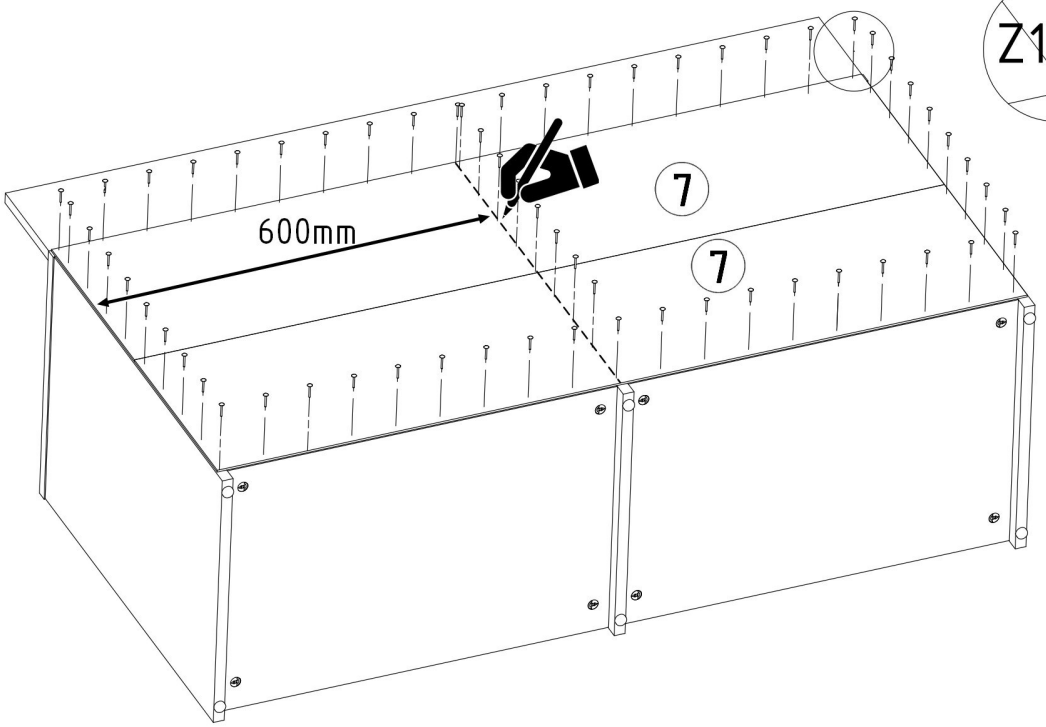

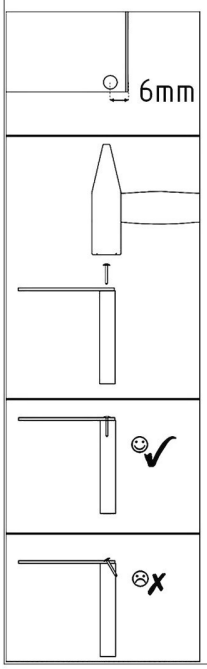

M1



12x15mm x6

x6

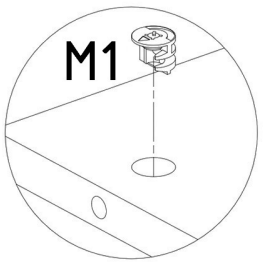

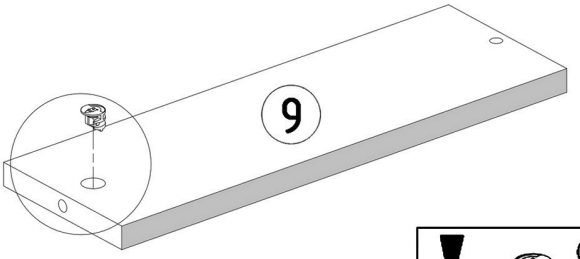

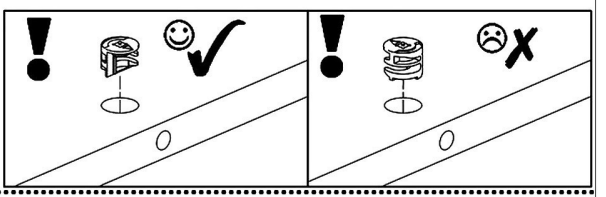

F1



7x50mm x6

F3

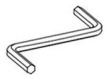

Hex 4mm



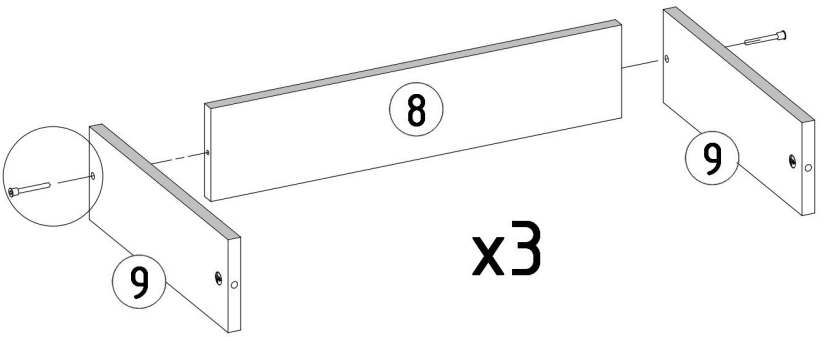

x3

N1



L=35mm x6

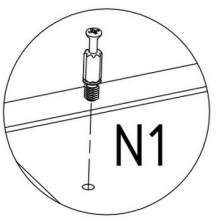

x3

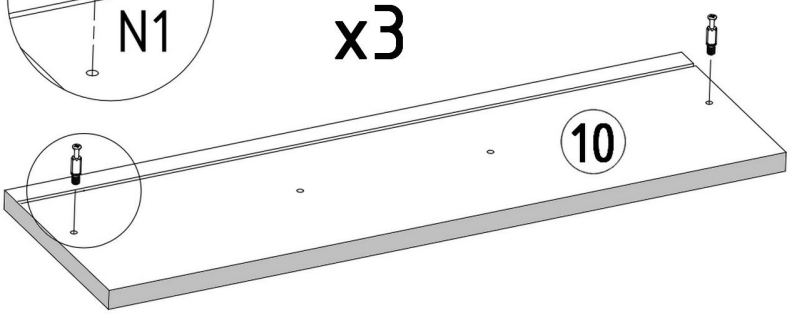

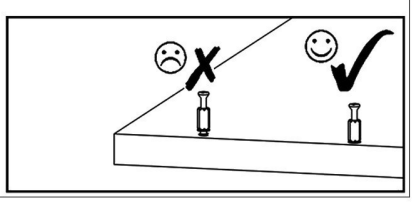

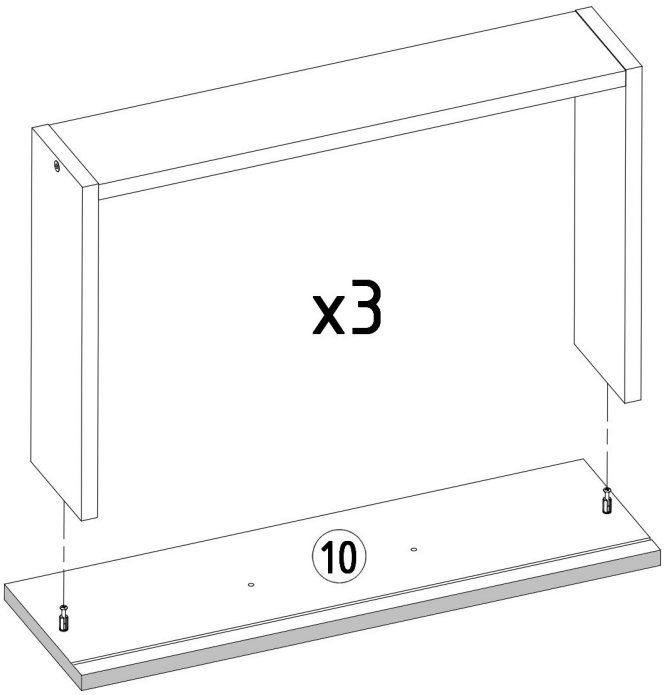

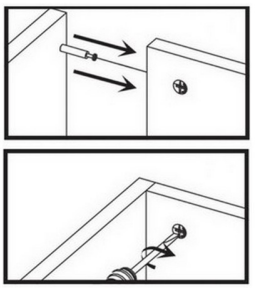

P3	S1	Z1	B1
			
L=350mm x3	3,5x16mm x12	x15	ø17/4mm x6

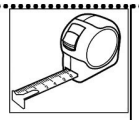

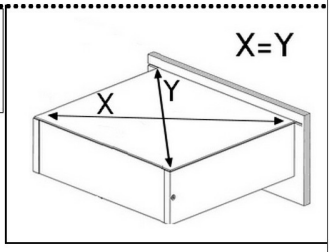

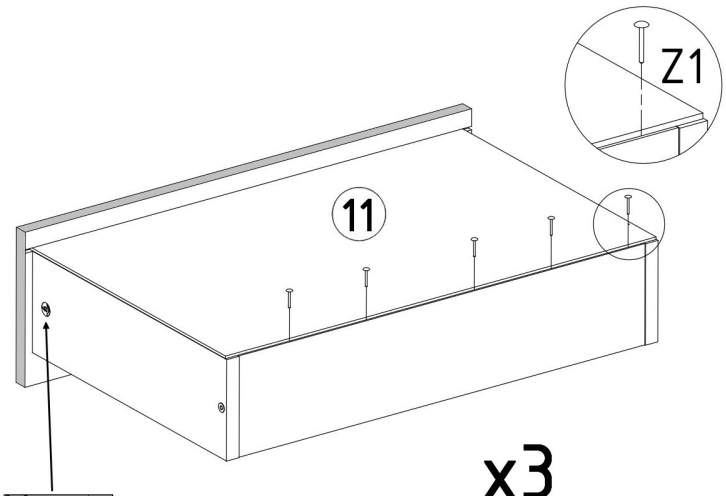

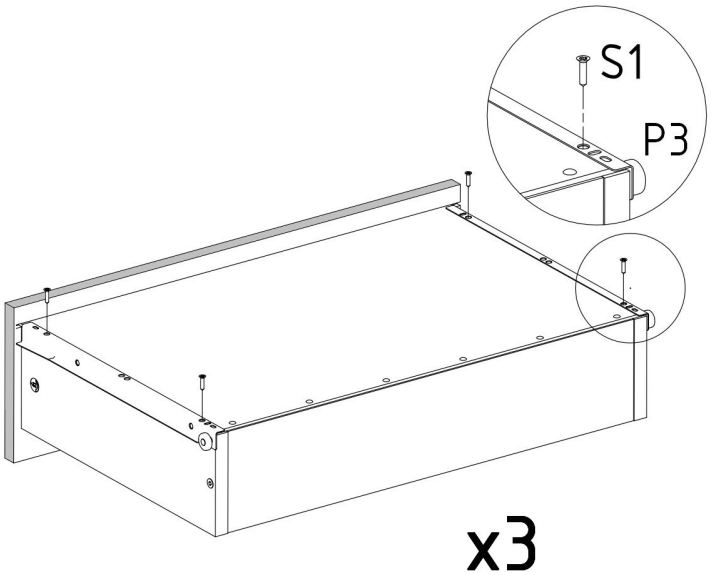

U7

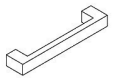

L=180mm x3

R8

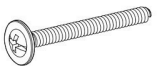

4x30mm x6

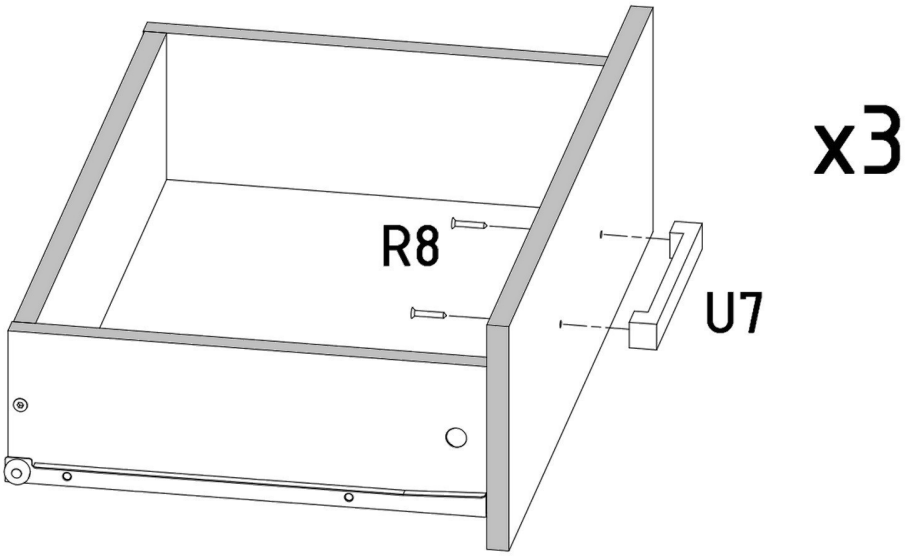

B1



ø17/4mm x2

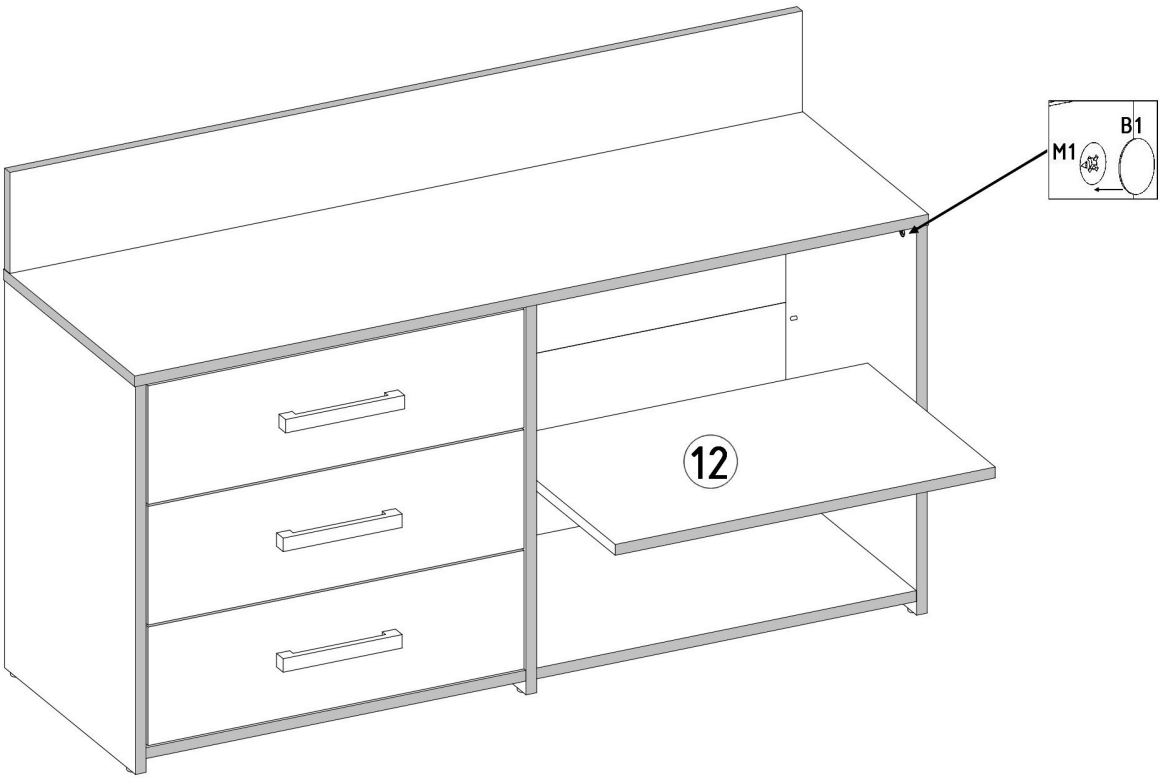

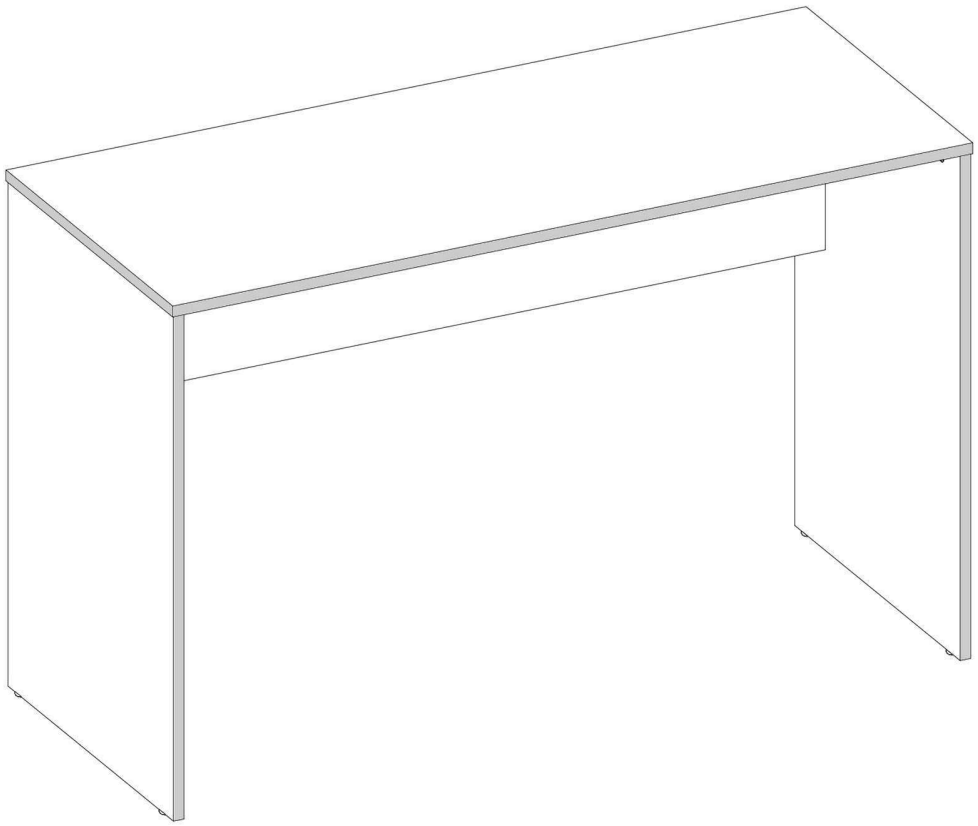

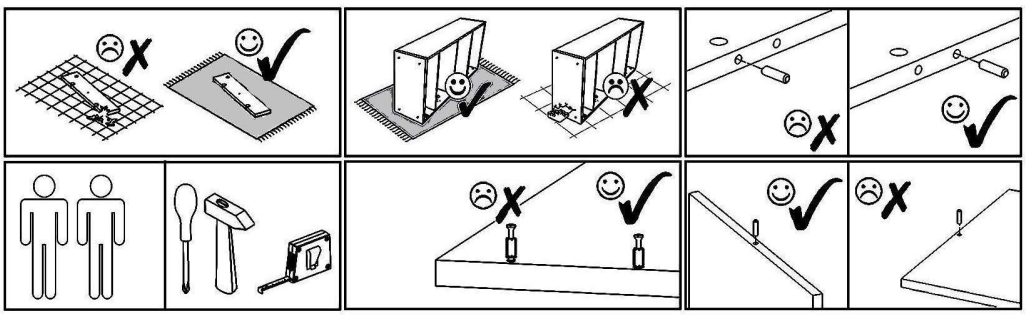

B1								
								
G ø17/4mm x8								
N1	M1	T1	B1	E1	B1	B1	B1	
								
L=35mm x8	12x15mm x8	x4	B ø17/4mm x8	8x30mm x6	S-A ø17/4mm x8	Ant ø17/4mm x8	K ø17/4mm x8	

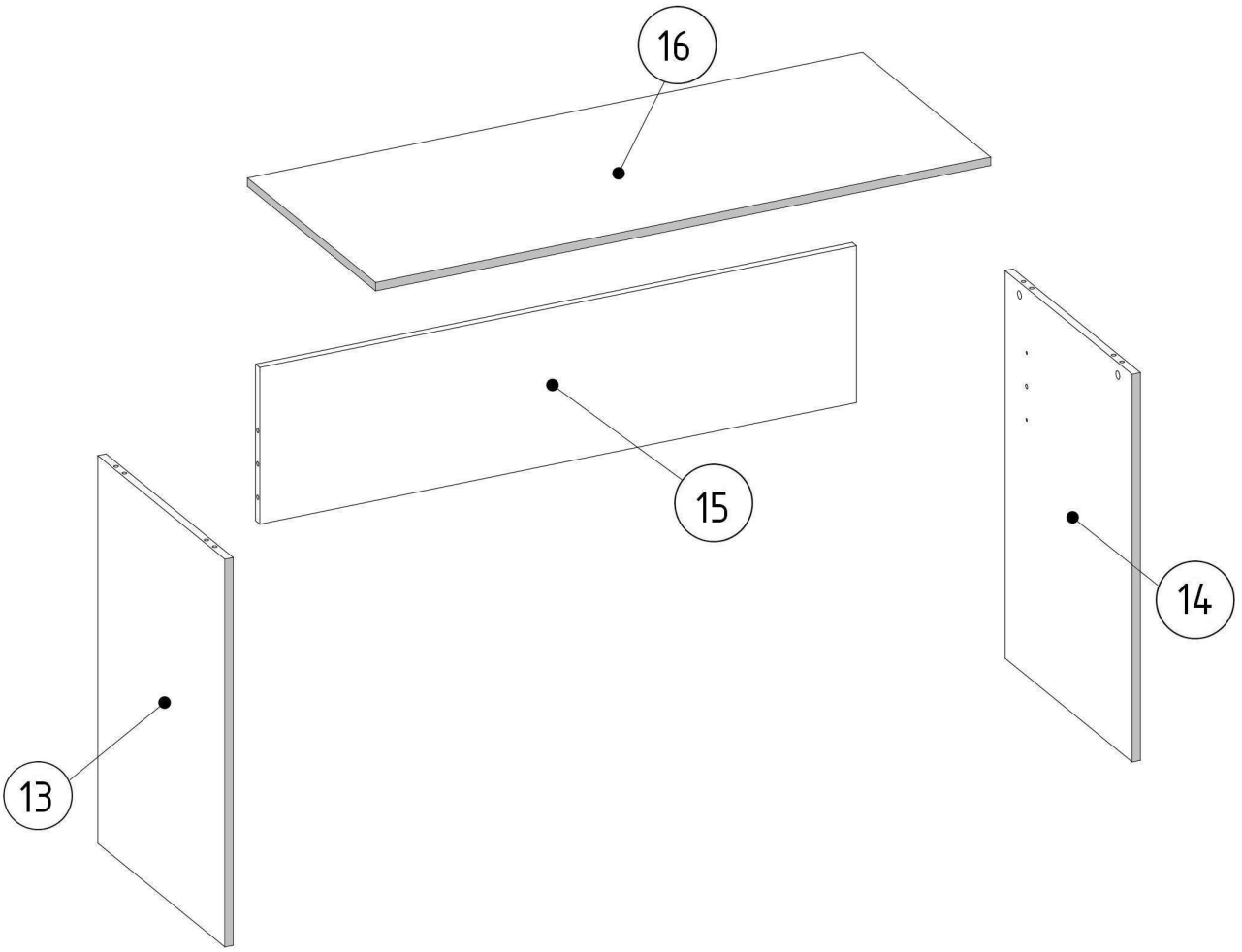

ID	NUMBER	QUANTITY
000246	16	1
000238	15	1
000179	14	1
000178	13	1

N1	M1	T1	E1
L=35mm x2	12x15mm x2	x2	8x30mm x2

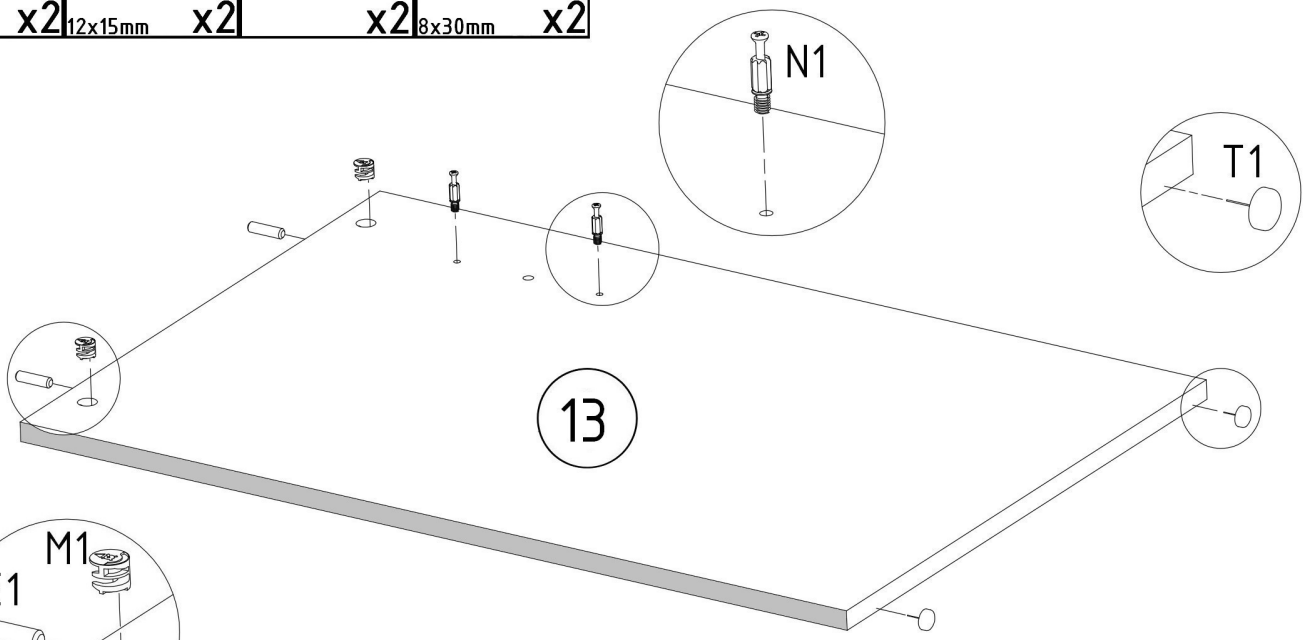

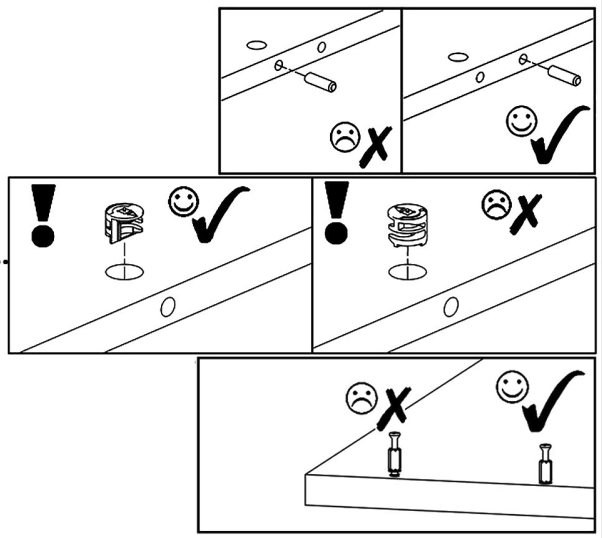

N1	M1	T1	E1
L=35mm x2	12x15mm x2	x2	8x30mm x2

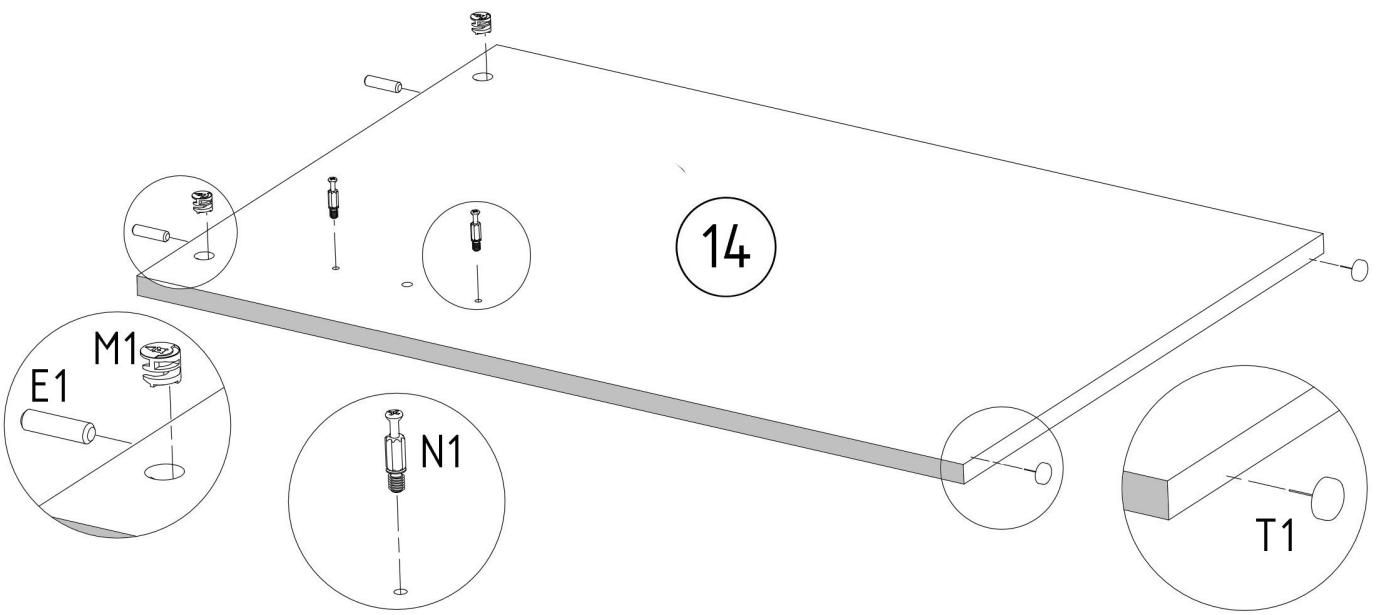

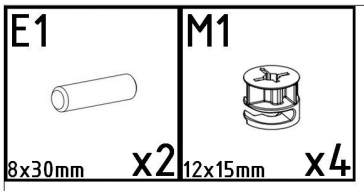
E1
8x30mm
x2
M1
12x15mm
x4

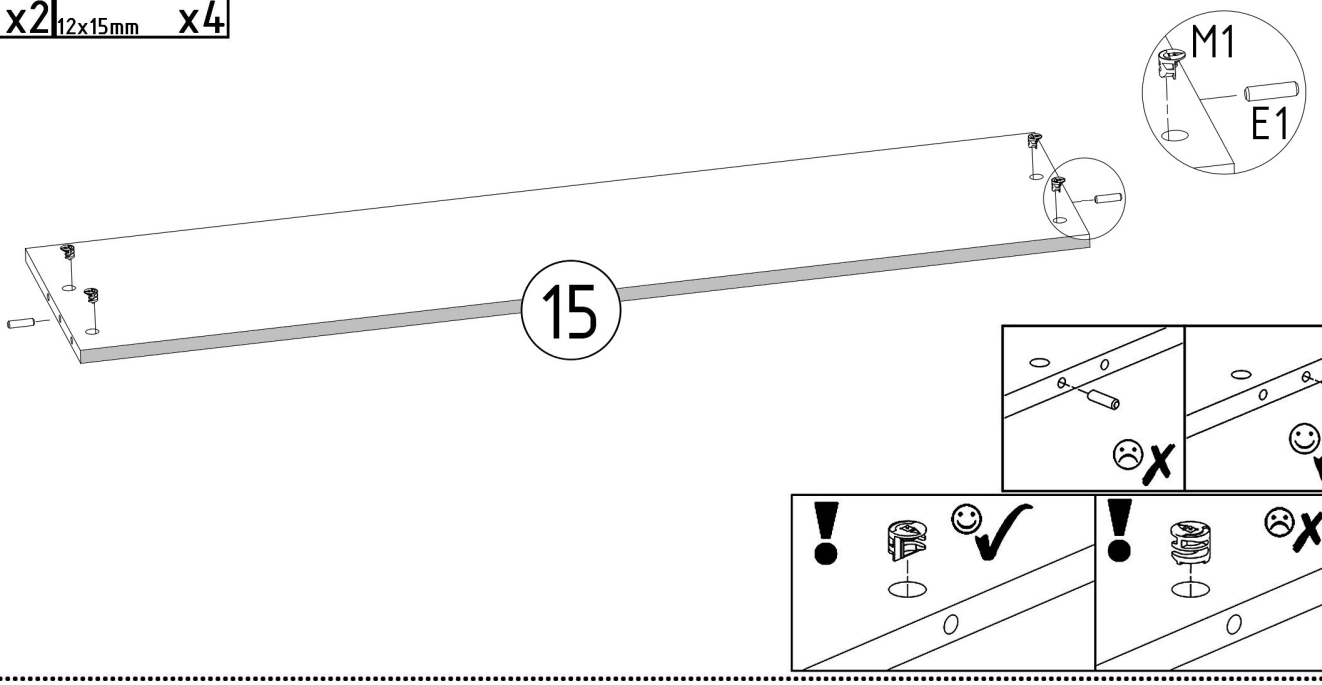
M1
E1
15

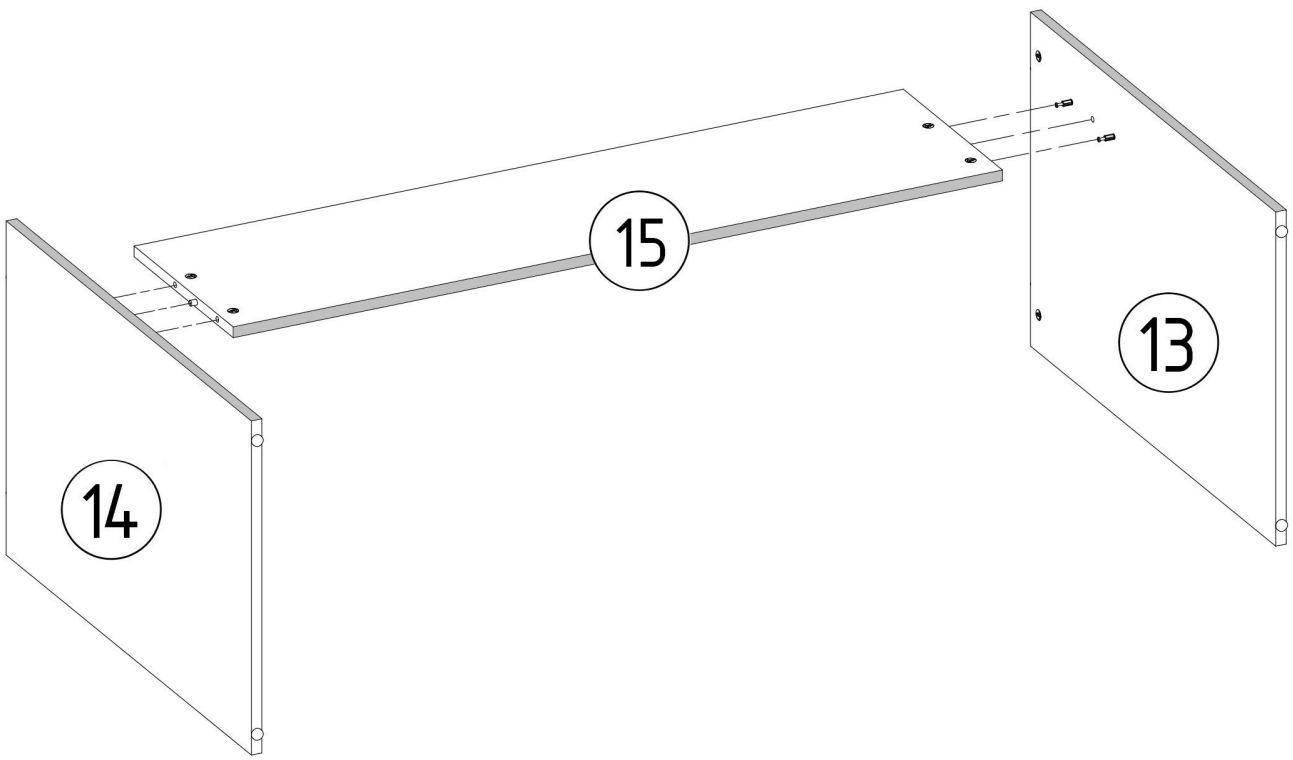
15
14
13

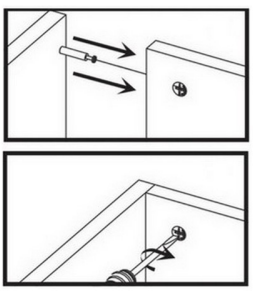

N1



L=35mm x4

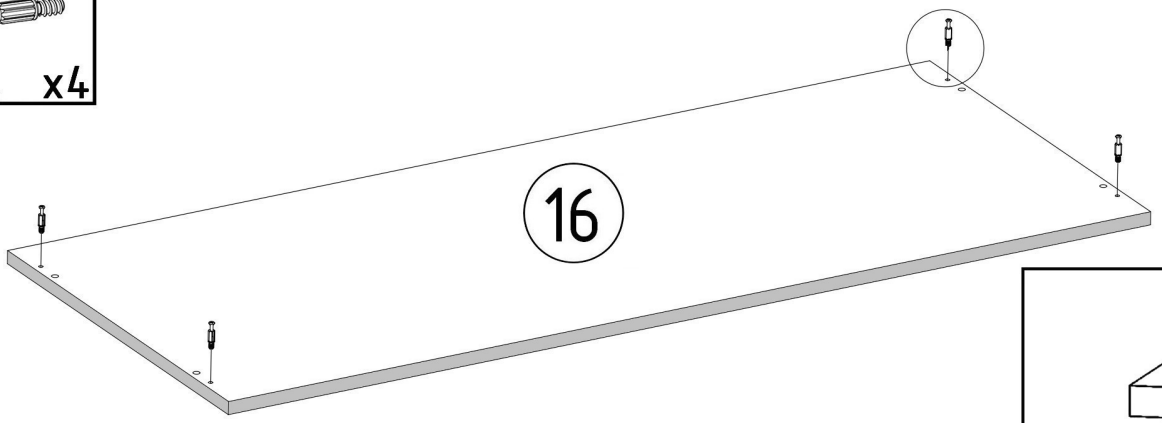

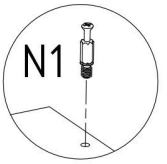

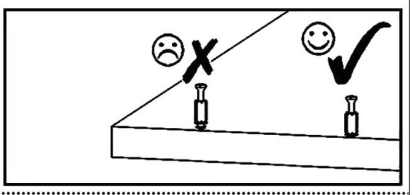

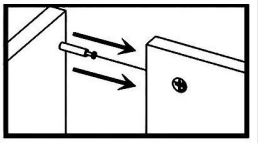

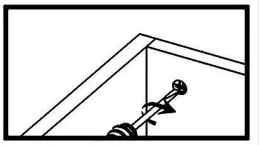

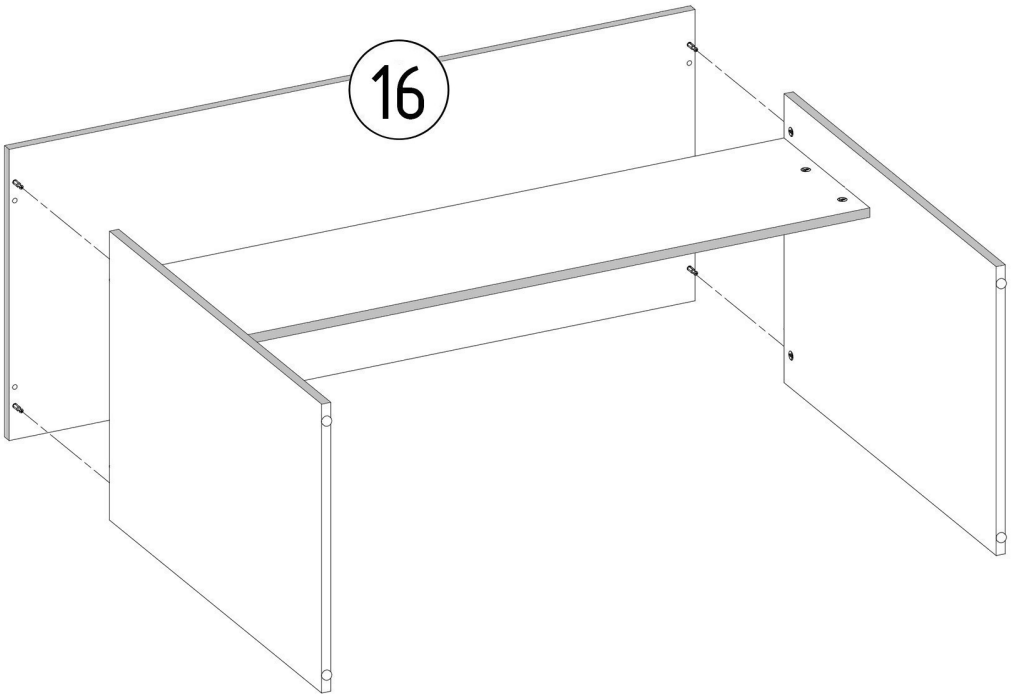

B1



ø17/4mm x8

