INSTRUKCJA MONTAŻU

Szafa 90 cm z szufladami, 180 cm

Kolor: Biały

Kod produktu: OR10176

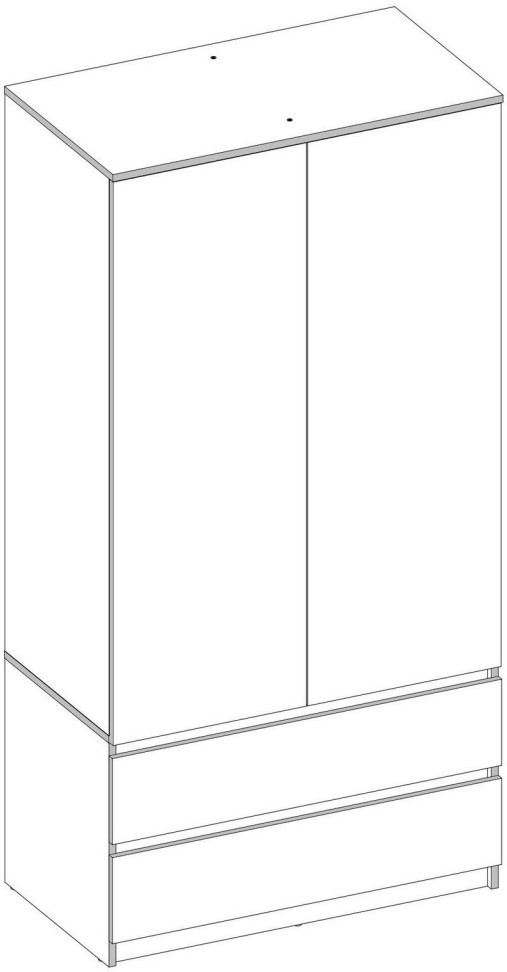

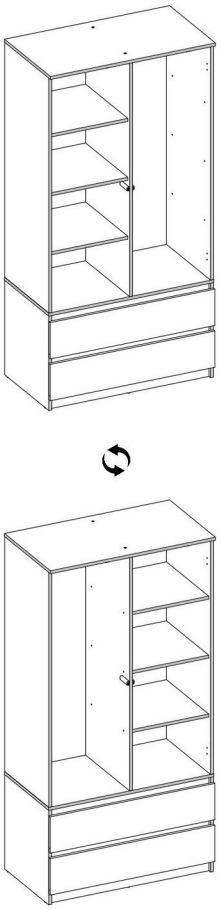

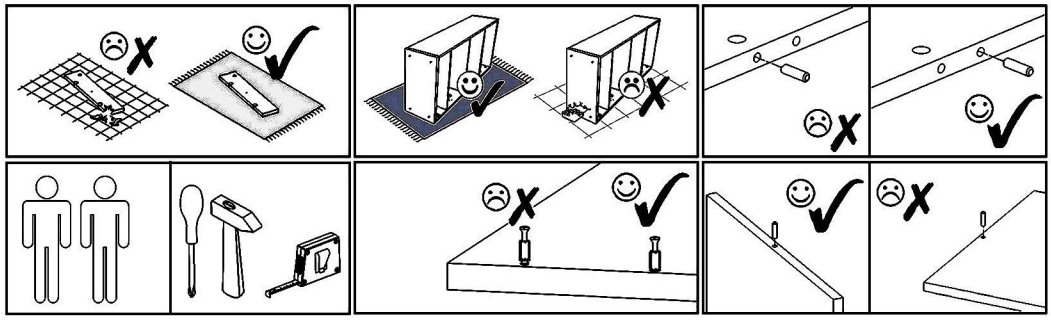

P4  L=400mm x2	T1  x5	B1  B ø17/4-5mm x4	S6  2,5x20mm x20
N1  L=35mm x20	F1  7x50mm x12	F3 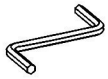 Hex 4mm x1	A1  ZP x4
S1  3,5x16mm x16	Z1  x100	V15  x20	V13  x1
E1  8x30mm x12	M1  12x15mm x20	E5  8x70mm x4	V16  5x16mm x12
V19  x2	V8  L=414mm x1	R1  6x8mm x12	V7  x2

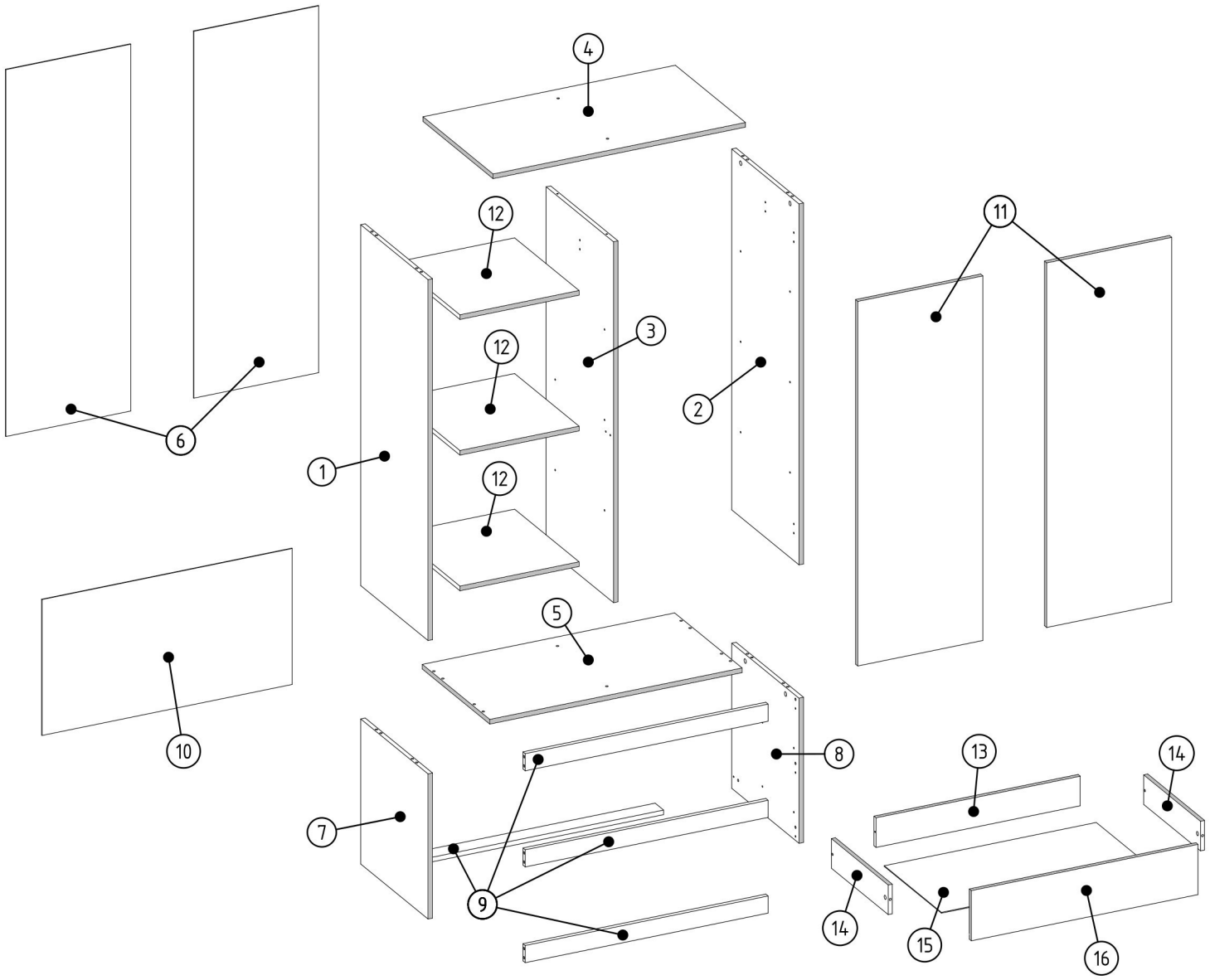

1	x	1
2	x	1
3	x	1
4	x	1
5	x	1
6	x	2
7	x	1
8	x	1

9	x	4
10	x	1
11	x	2
12	x	3
13	x	2
14	x	4
15	x	2
16	x	2

E1	M1	E5	V16
8x30mm x2	12x15mm x2	8x70mm x2	5x16mm x6

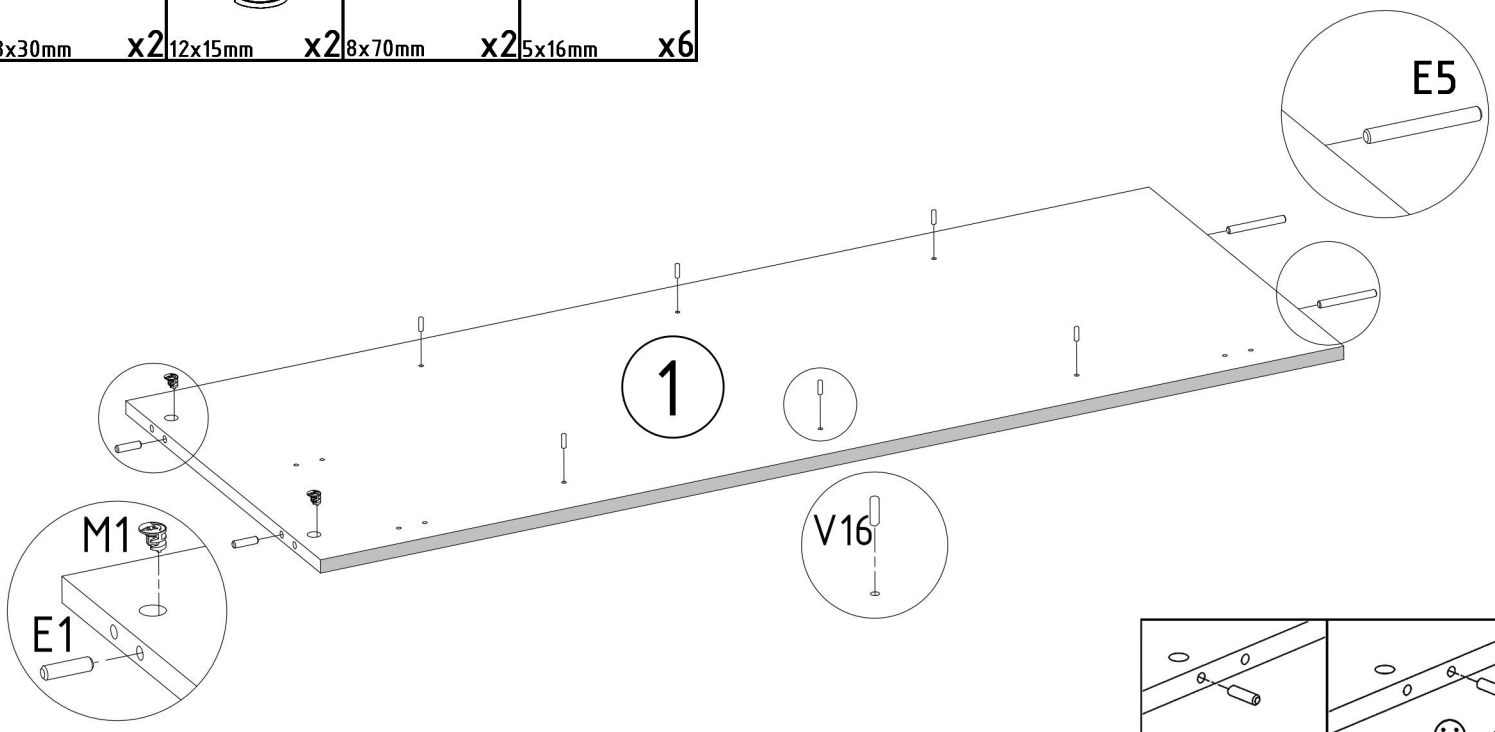

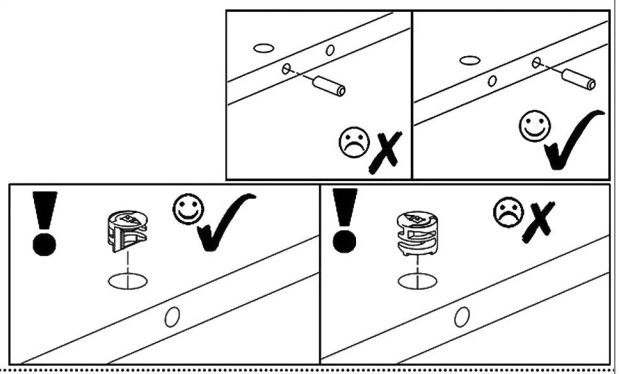

E1	M1	E5	V19
8x30mm x2	12x15mm x2	8x70mm x2	x1

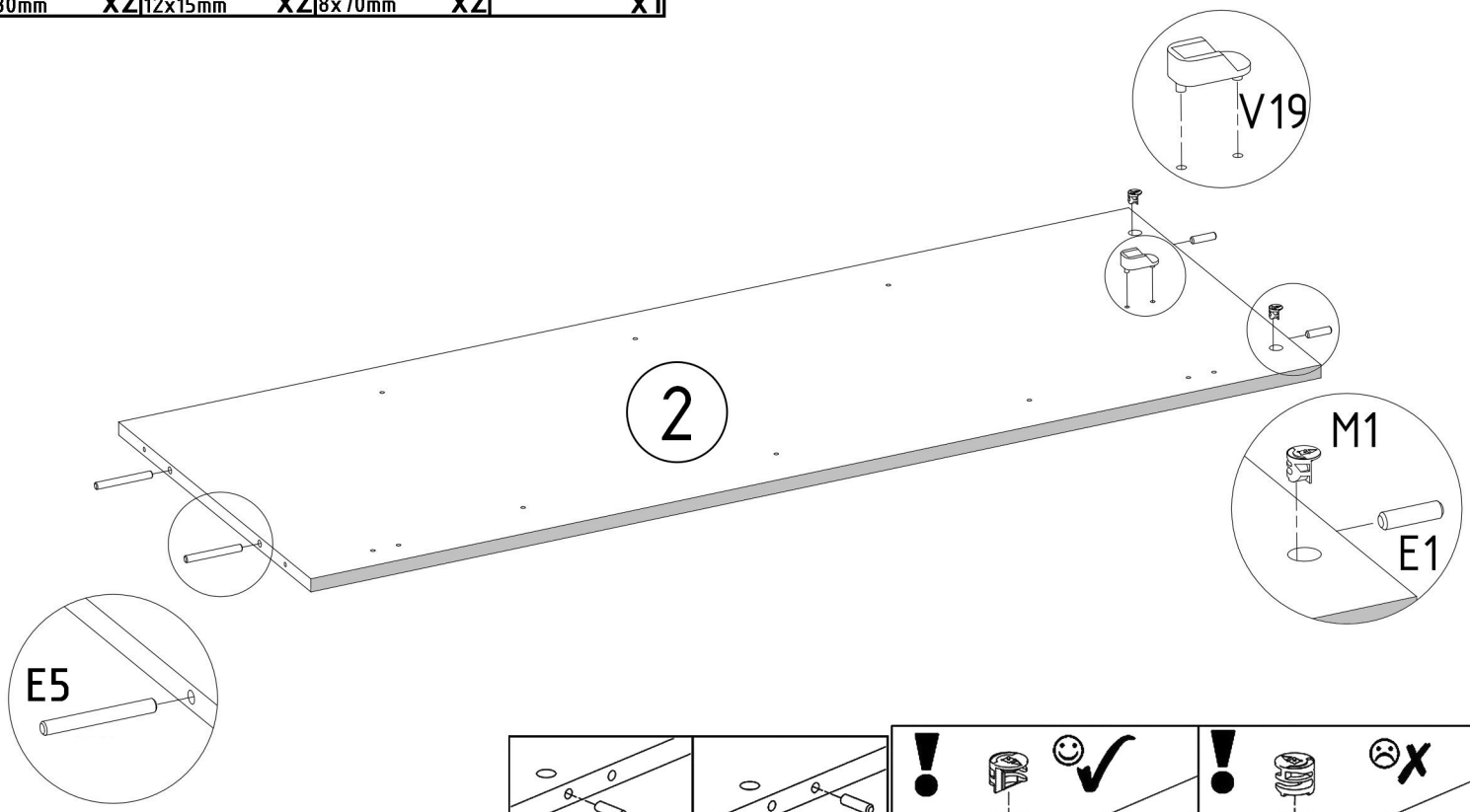

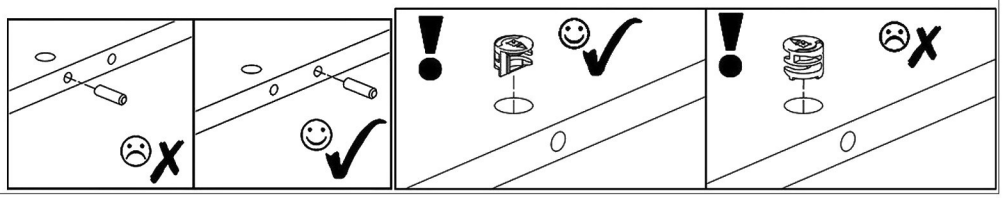

V19	R1	V7	V16
x1	6x8mm x4	x2	5x16mm x6

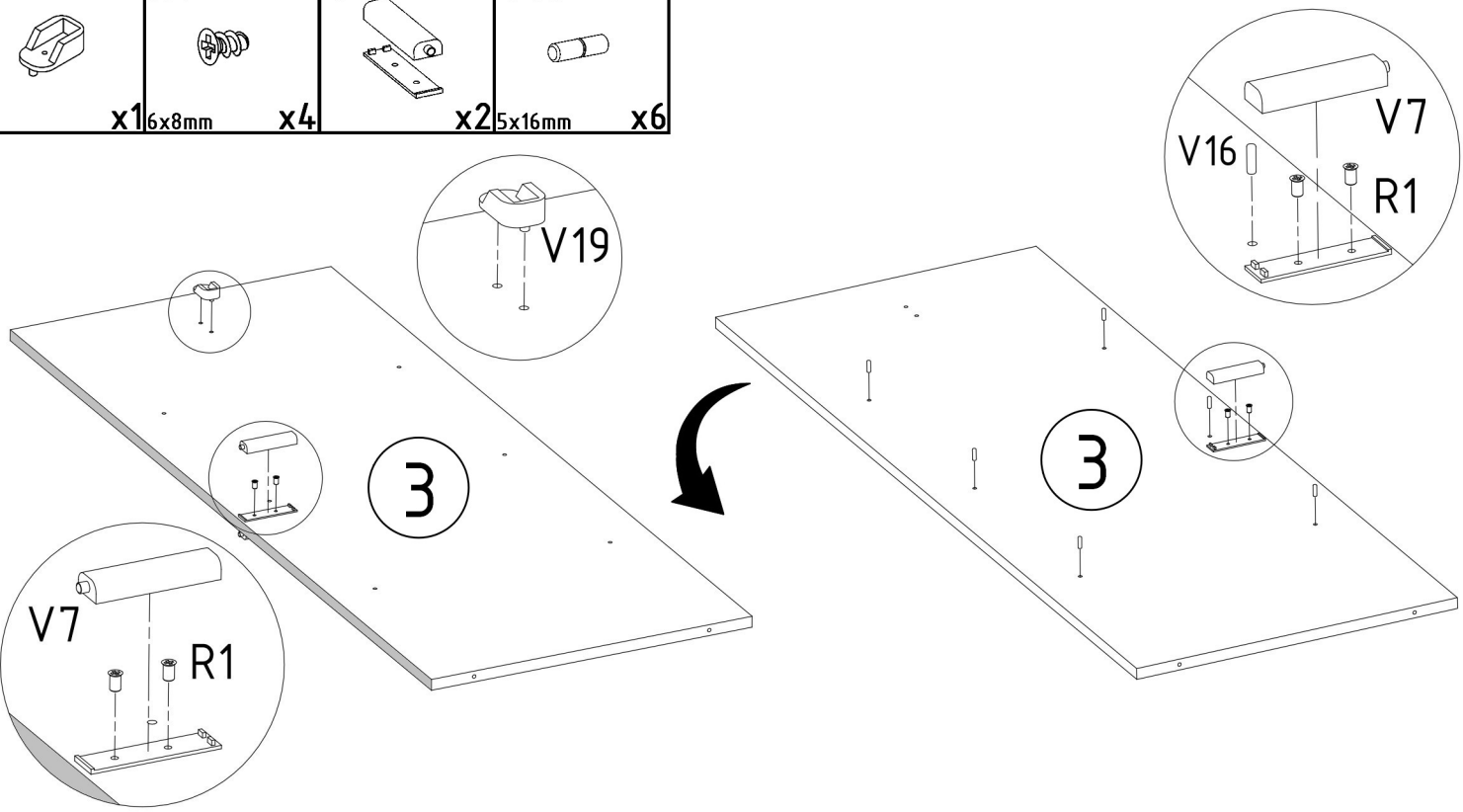

N1
L=35mm x4

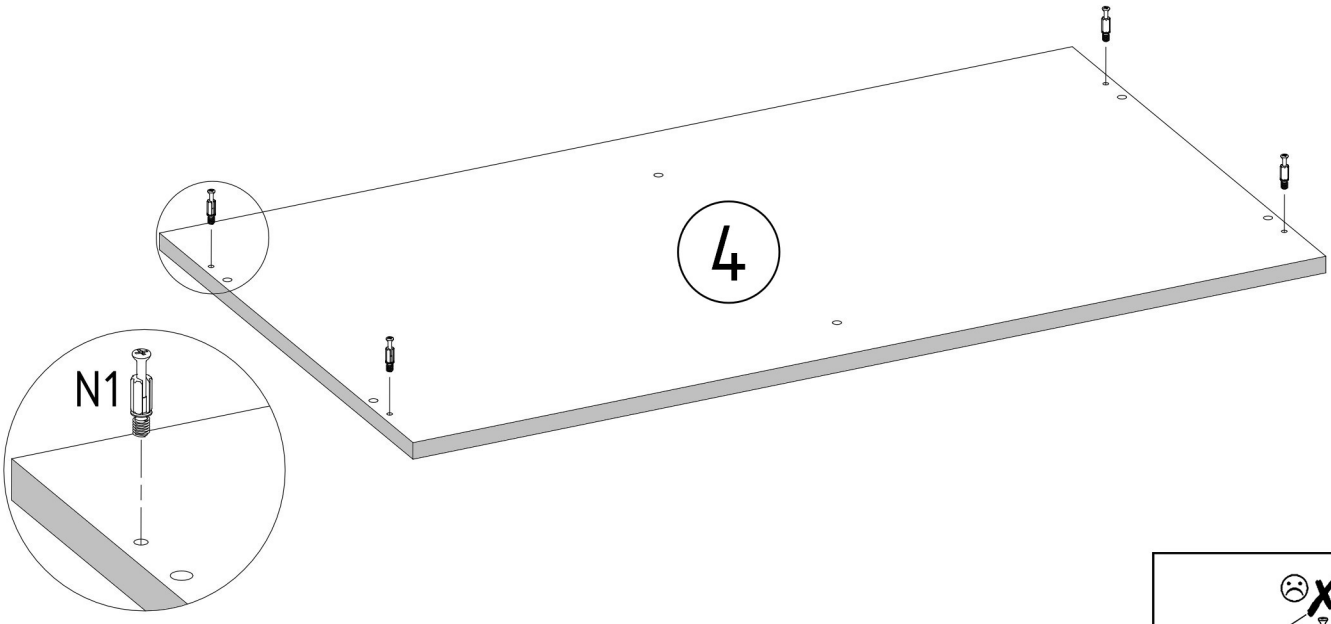

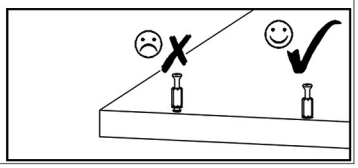

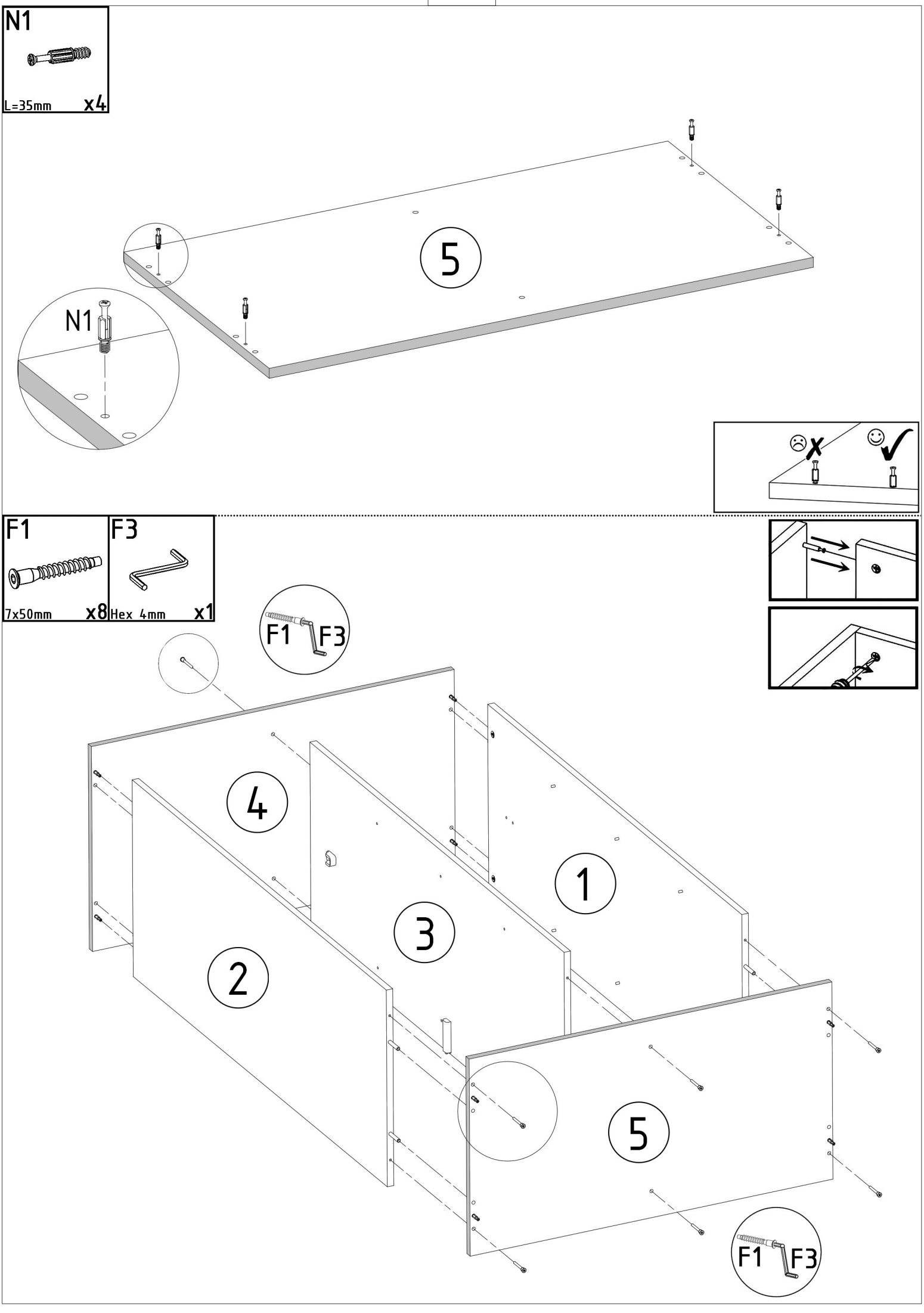
N1
L=35mm
x4
5
N1
F1
7x50mm
x8
F3
Hex 4mm
x1
F1
F3
4
1
3
2
5
F1
F3

M1	N1	P4	T1	R1
12x15mm x2	L=35mm x4	L=400mm x2	x2	6x8mm x4

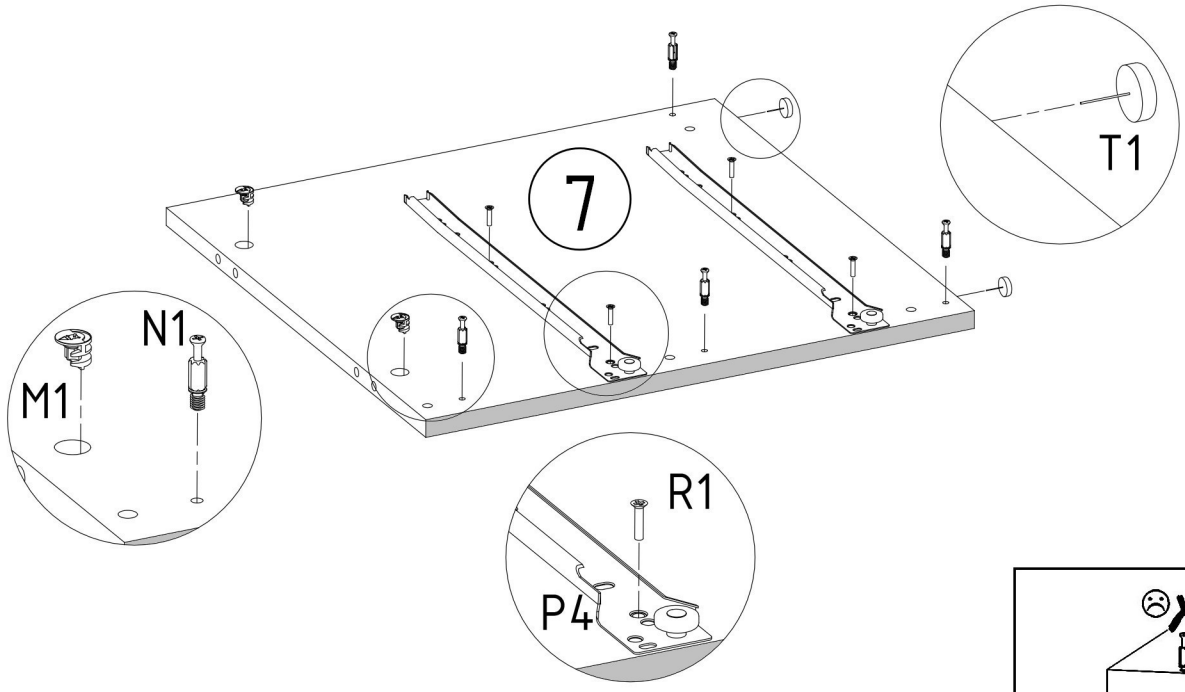

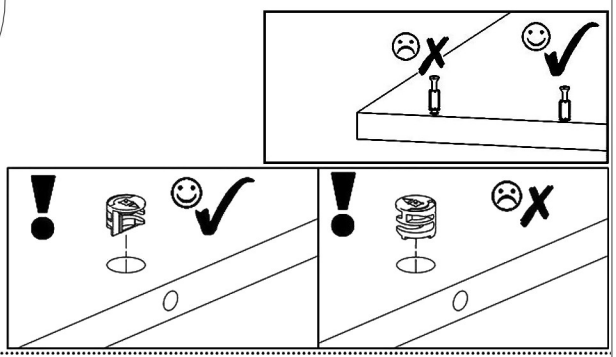

M1	N1	P4	T1	R1
12x15mm x2	L=35mm x4	L=400mm x2	x2	6x8mm x4

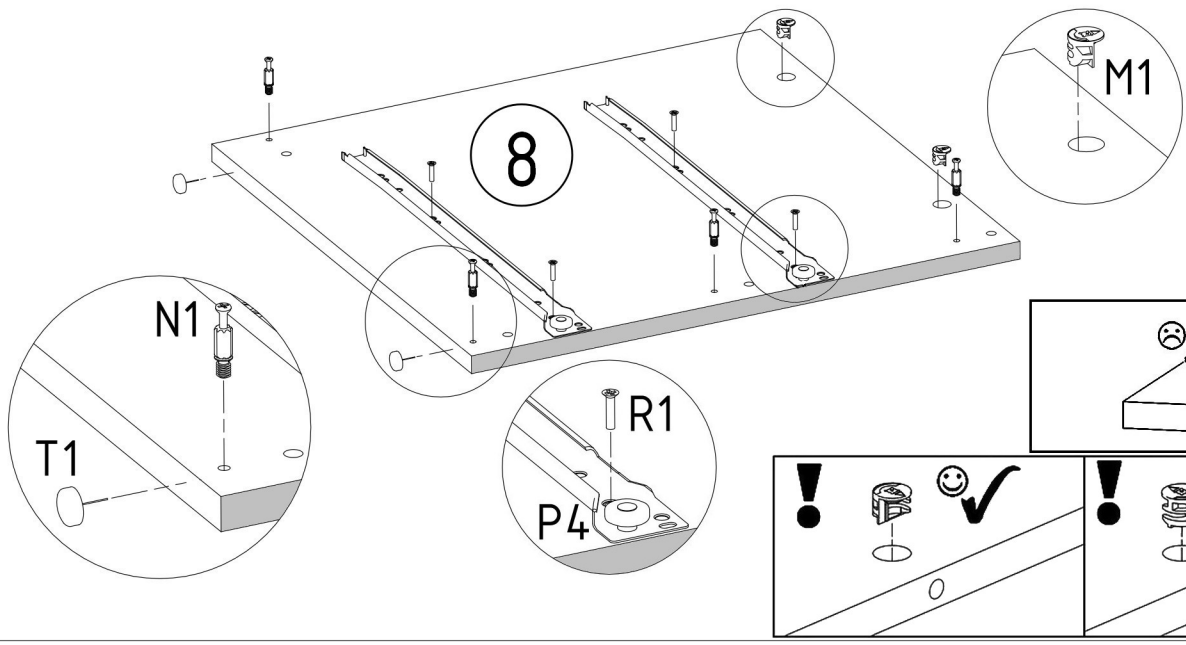

M1	T1	E1
		
12x15mm x8	x1	8x30mm x8

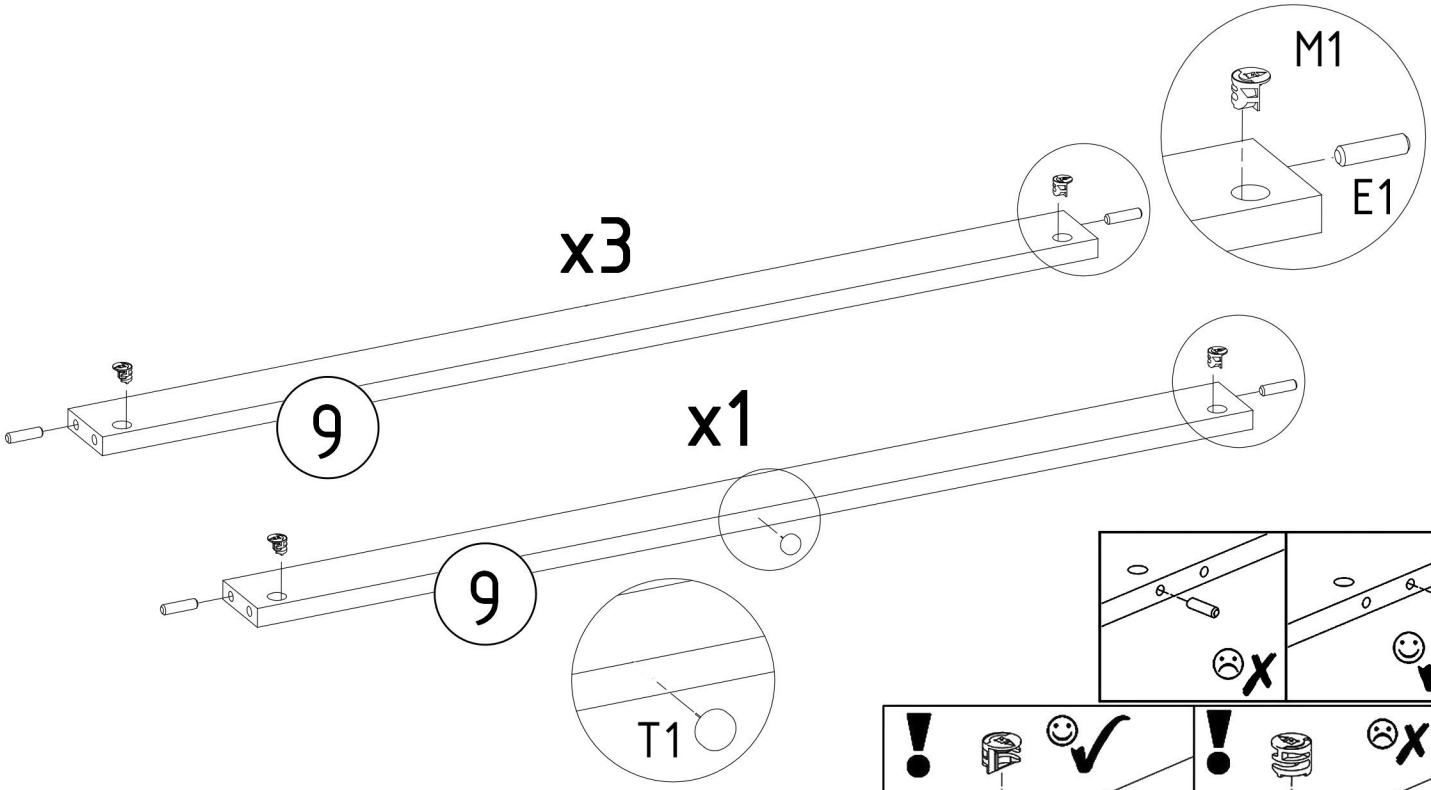

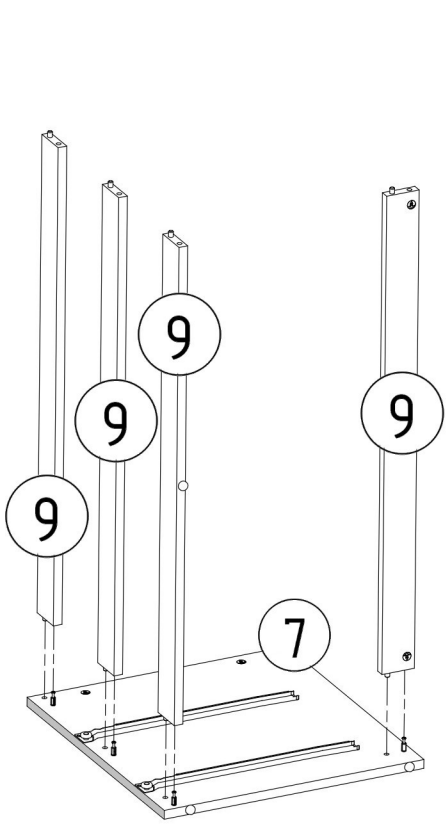

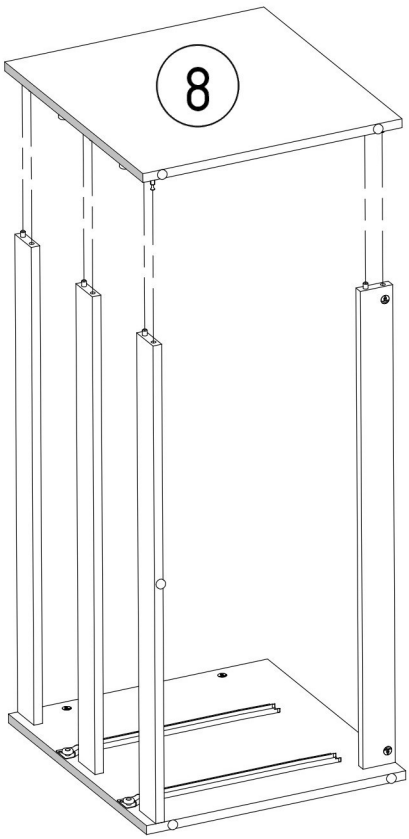

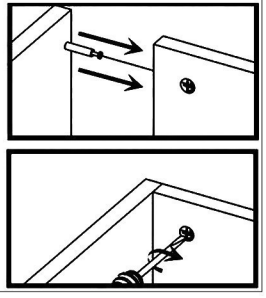

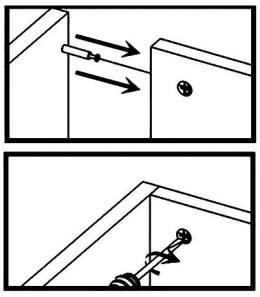

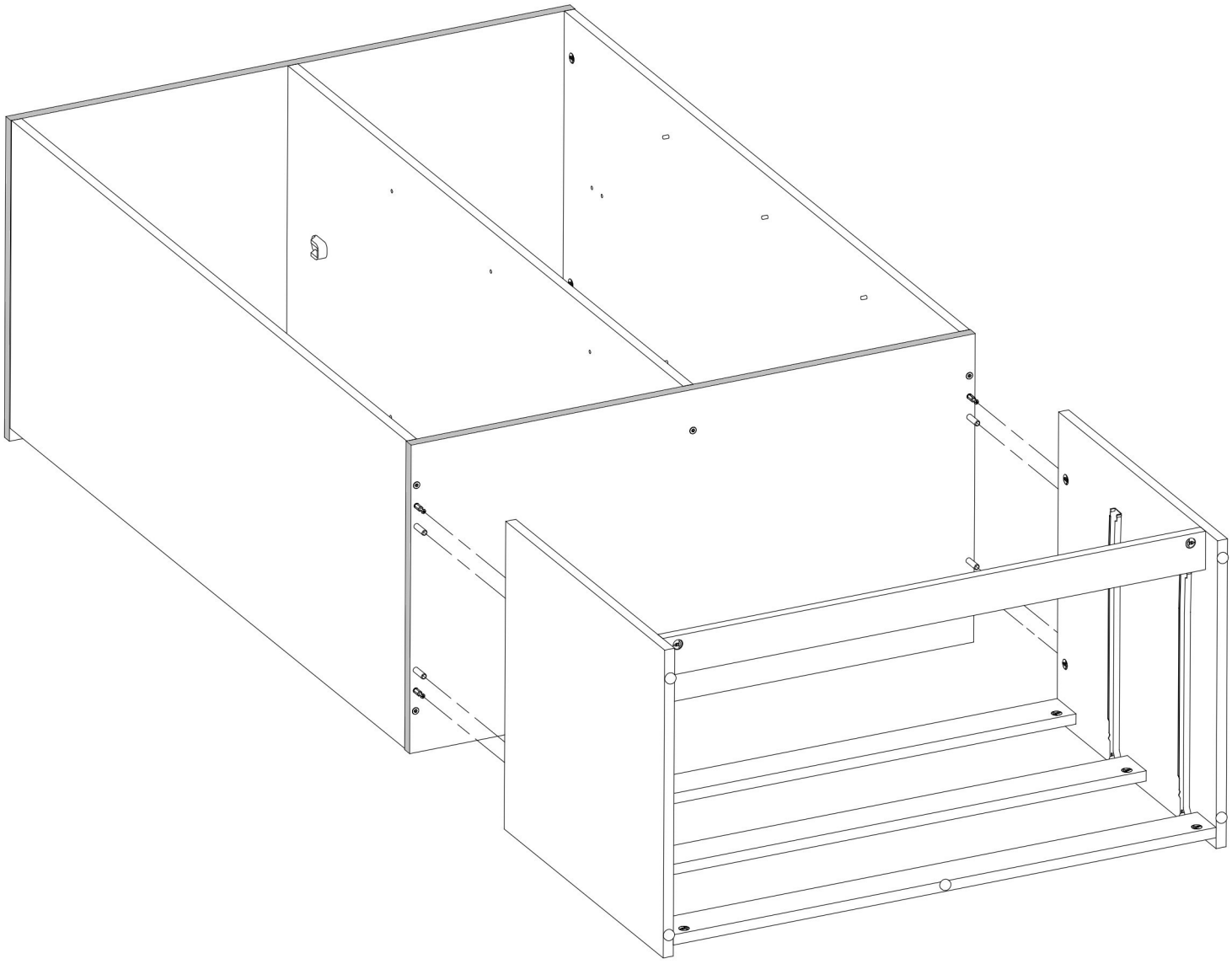

Z1	V15	S6
x88	x20	2,5x20mm x20

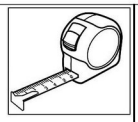

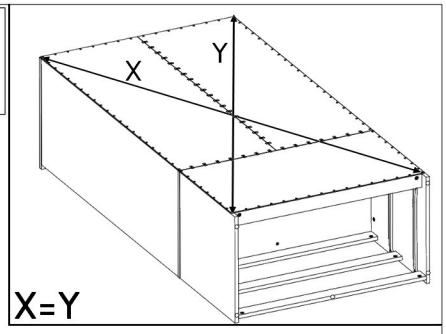

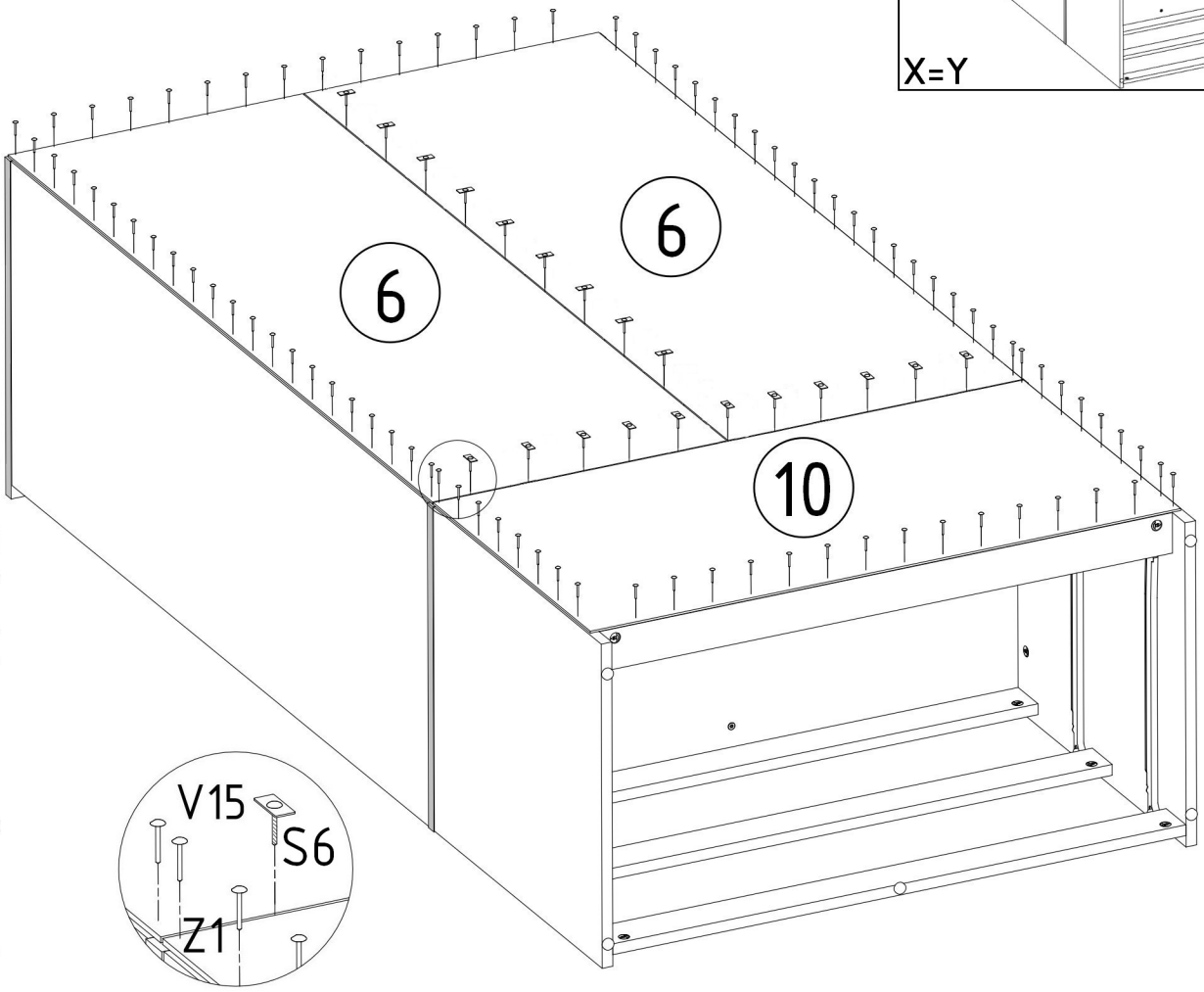

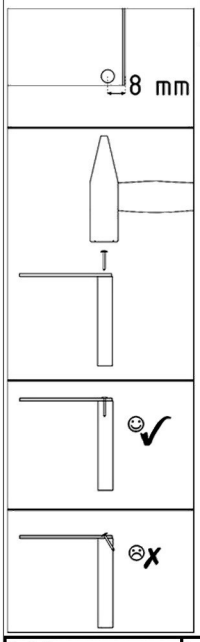

M1	F1	F3
12x15mm x4	7x50mm x4	Hex 4mm

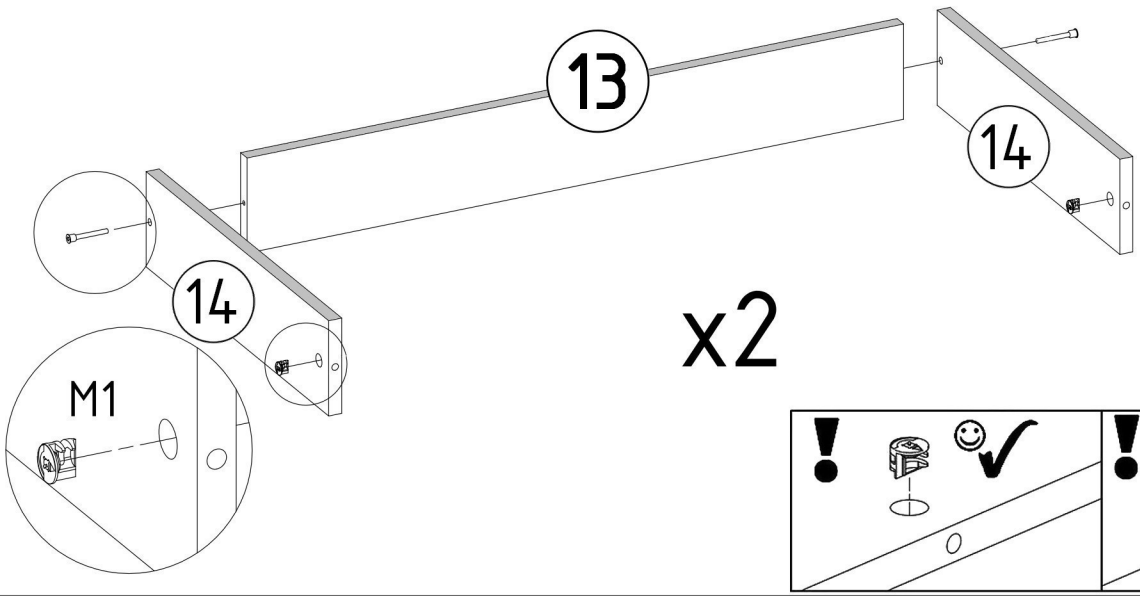

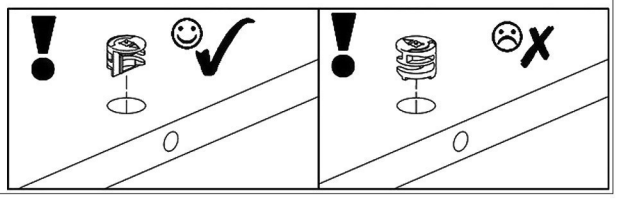

N1



L=35mm x4

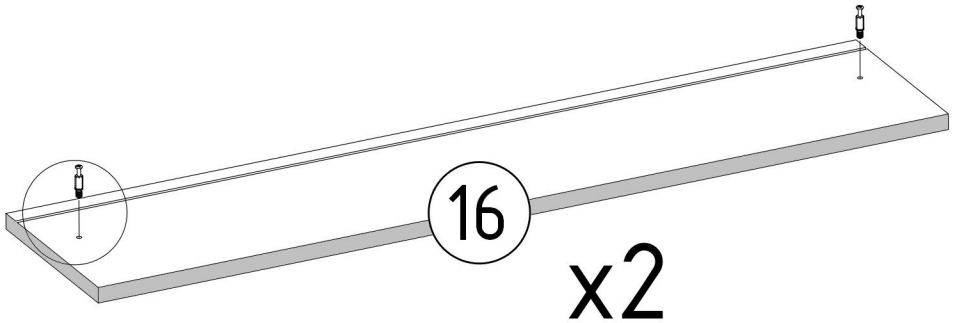

x2

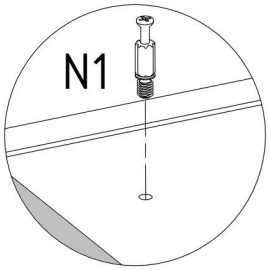

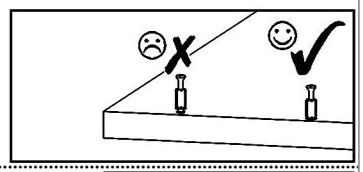

B1



ø17/4-5mm x4

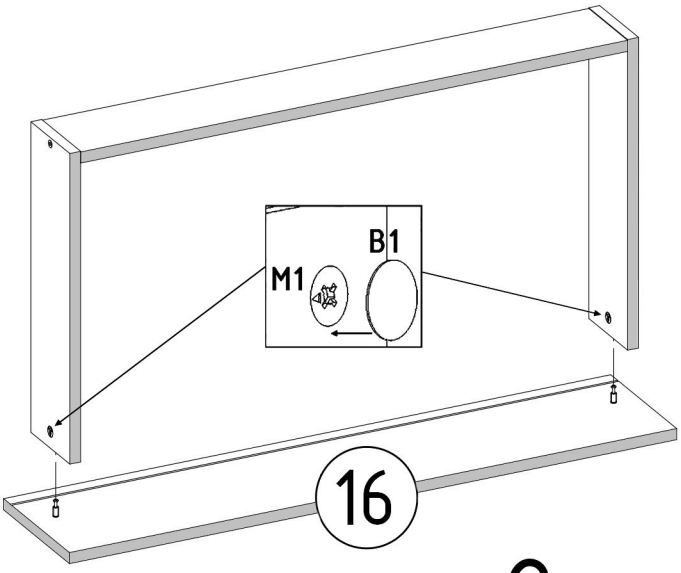

x2

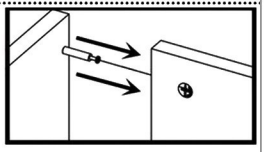

1.

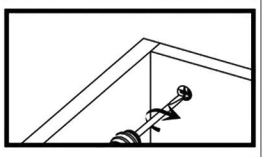

2.

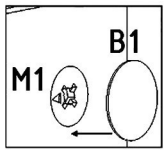

Z1



x12



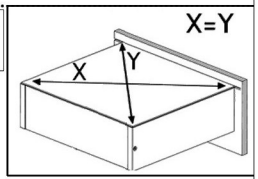

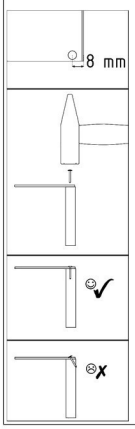

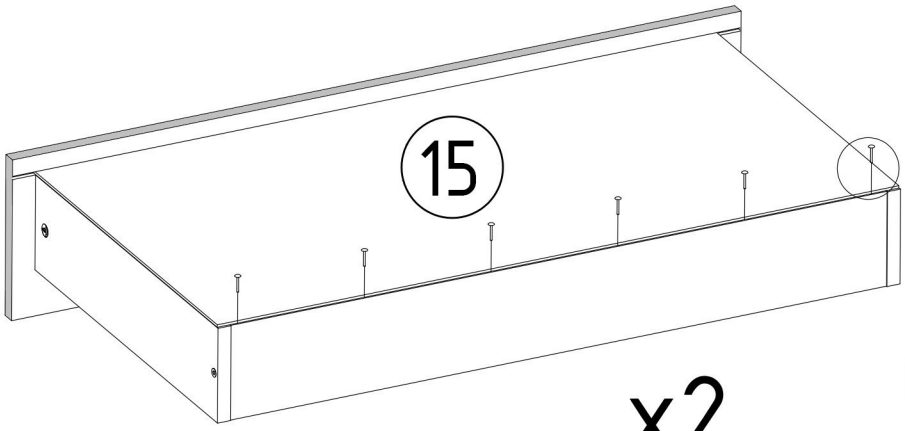

x2

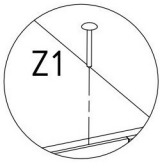

S1	P4
	
3,5x16mm x8	L=400mm x4

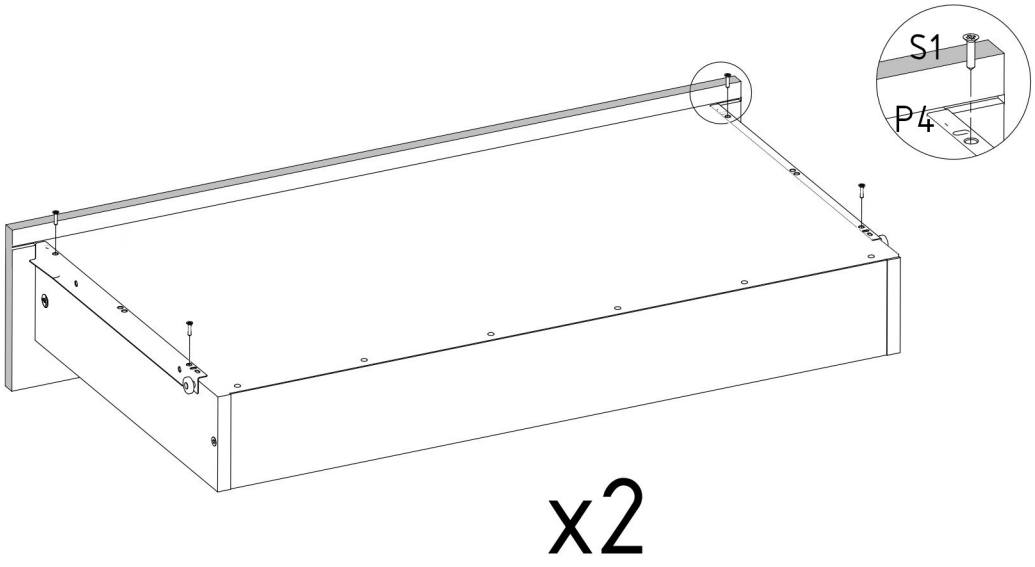

A1	S1
	
ZP x4	3,5x16mm x8

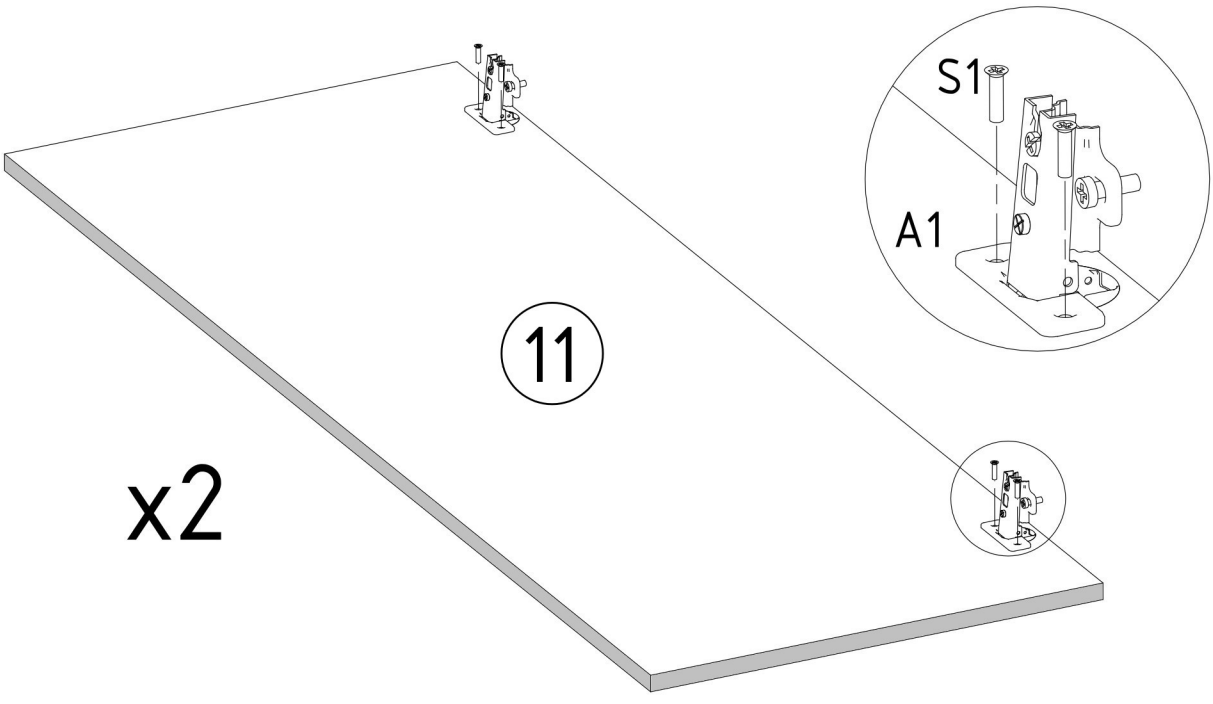

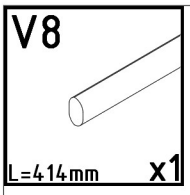
V8
L=414mm
x1

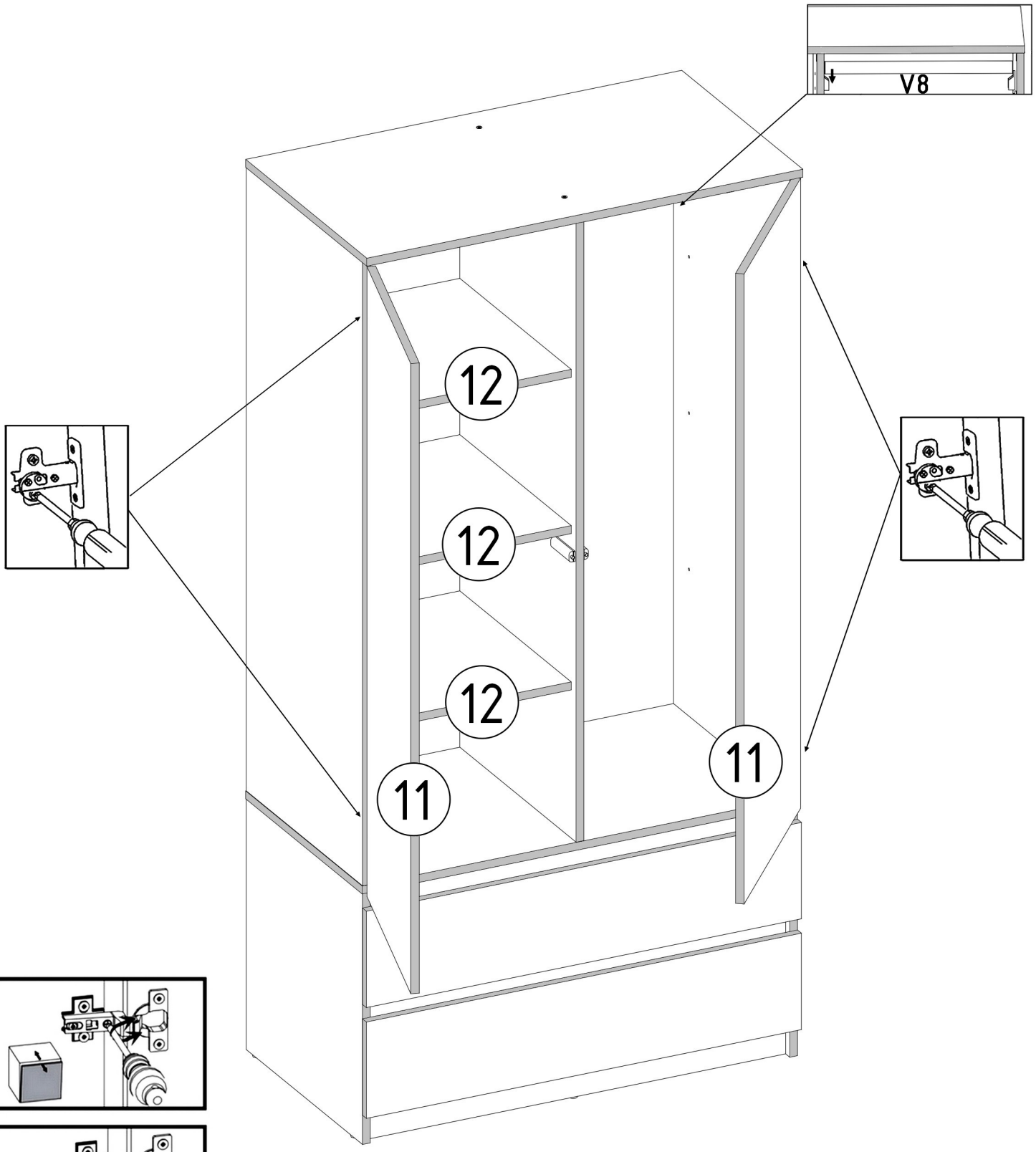
V8
12
12
12
11
11

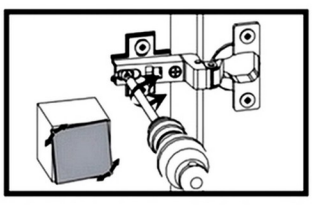

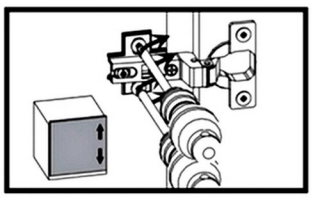

V13

x1

