INSTRUKCJA MONTAŻU

Wysoki słupek 30 cm z szufladą, drzwiczkami i otwartą wnęką, 202 cm

Kolor: Dąb Artisan / Czarny

Kod produktu: OR10445

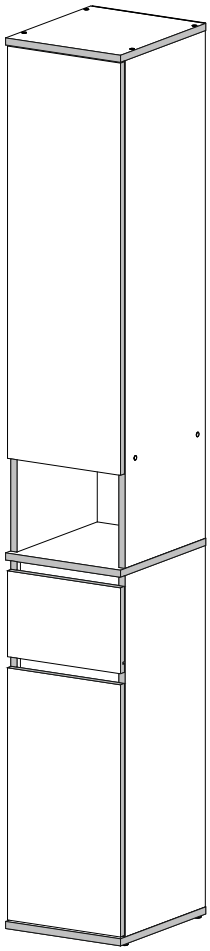

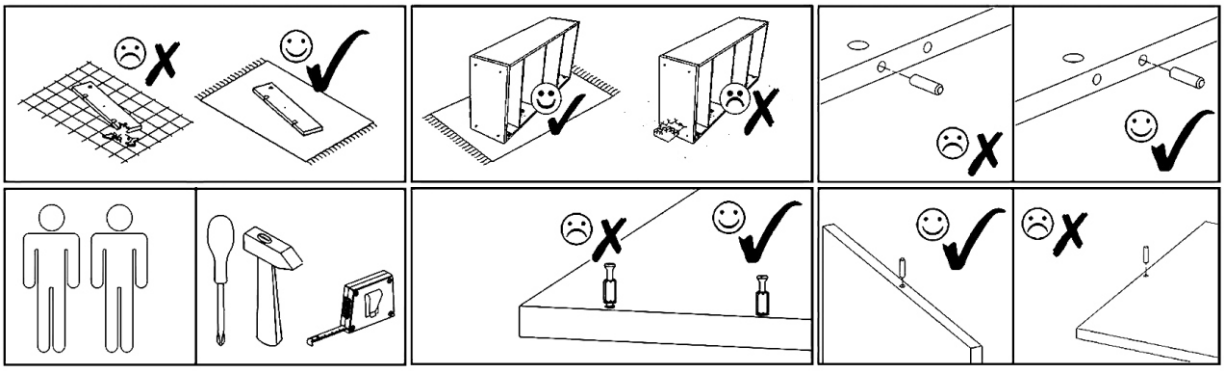

A1 ZP x4	R1 6x8mm x4	S1 3,5x16mm x14	F3 Hex 4mm x1	F1 7x50mm x18	M1 12x15mm x6	N1 L=35mm x6	V16 5x16mm x16
E1 8x30mm x20	E3 8x50mm x4	Z1 x70	T1 x4	V15 x5	V41 x1	P2 L=300mm x1	B2 CZ ø12/4mm x4
B2 Ant ø12/4mm x4	B2 S/A ø12/4mm x4	B2 B ø12/4mm x4	B1 B ø17/4mm x2	V12 10-12ml x1			

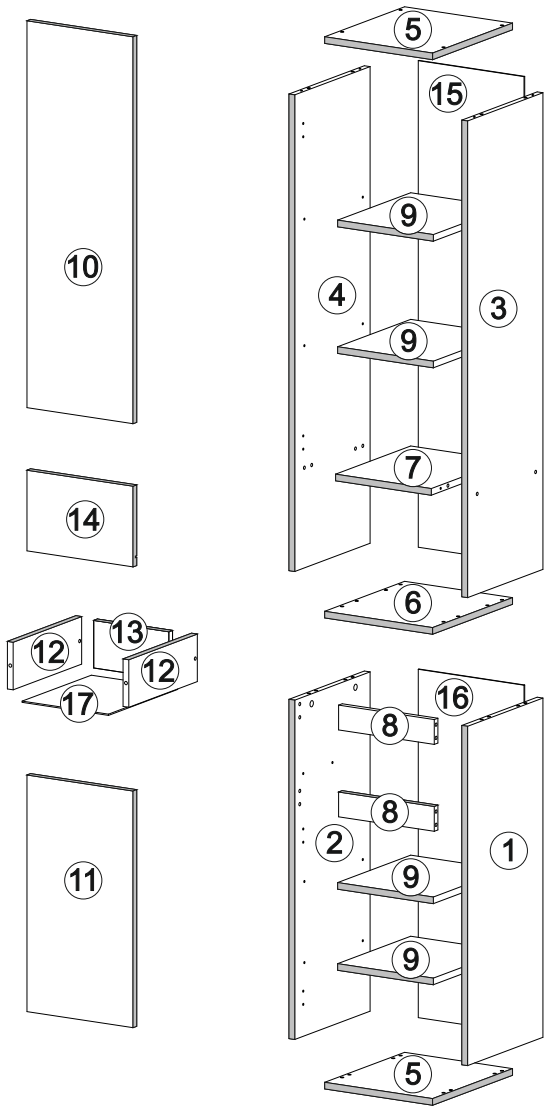

ID	NUMBER	QUANTITY
002047	1	1
002048	2	1
002036	3	1
002037	4	1
002033	5	2
002041	6	1
002040	7	1
002046	8	2
002042	9	4

002045	10	1
002035	11	1
001361	12	2
002038	13	1
002034	14	1
002044	15	1
002043	16	1
002039	17	1

E1	V16
8x30mm x4	5x16mm x8

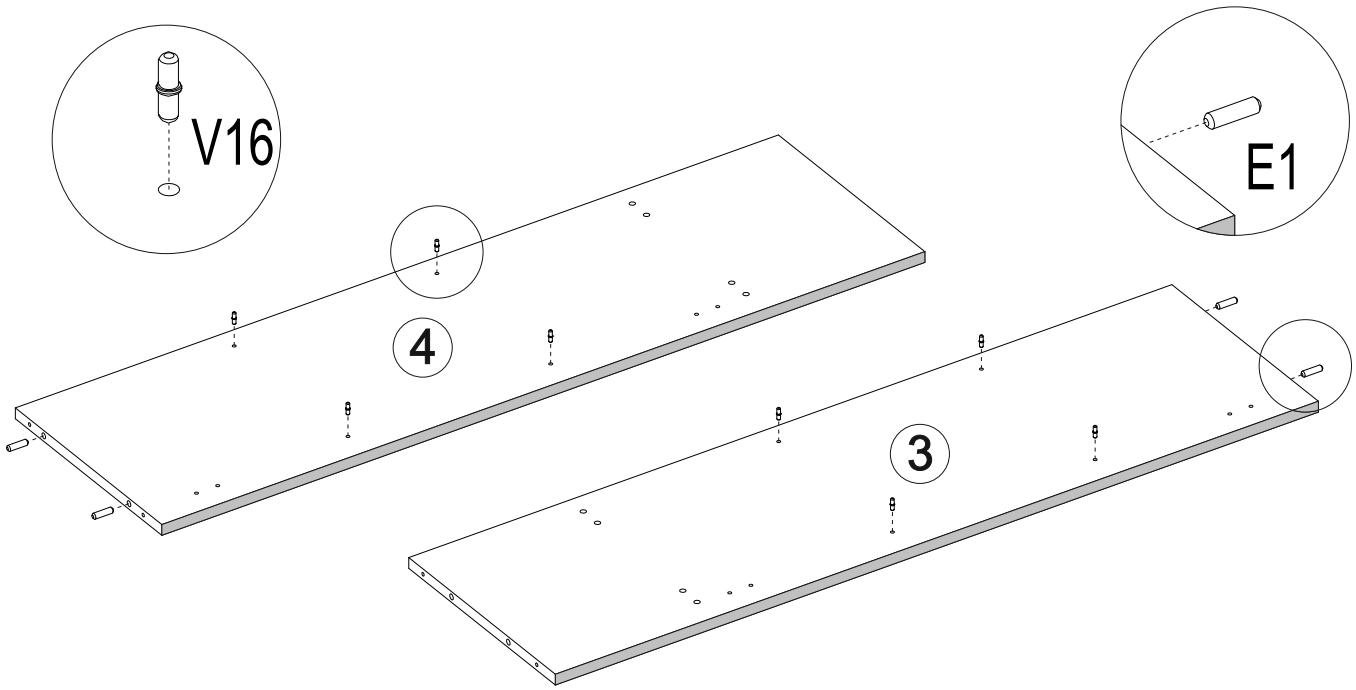

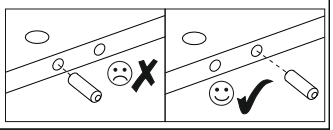

E1	V16	M1	P2	R1	E3
8x30mm x4	5x16mm x8	12x15mm x4	L=300mm x1	6x8mm x4	8x50mm x4

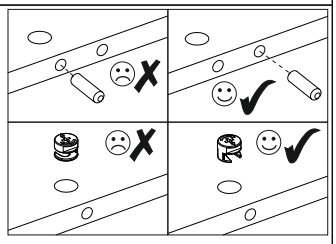

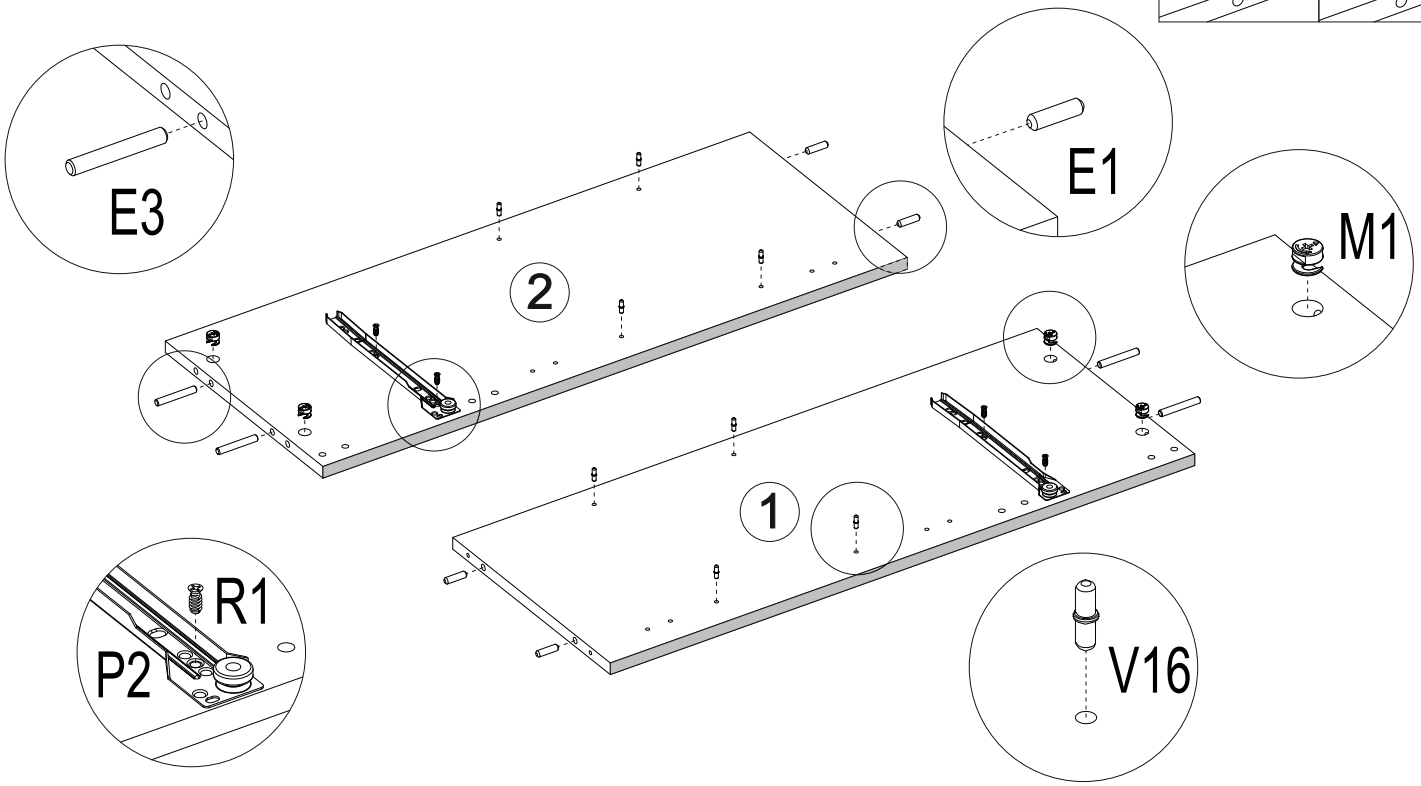

E1

8x30mm x8

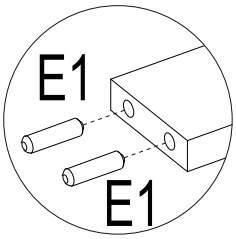

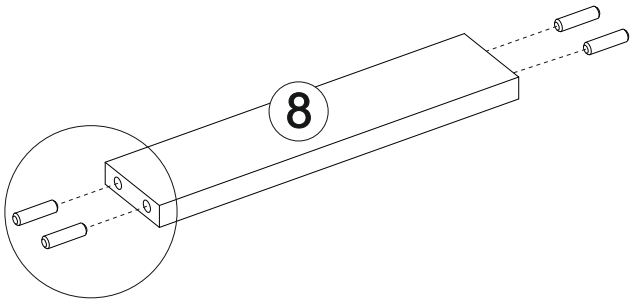

x2

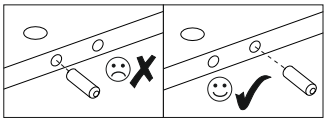

E1

8x30mm x4

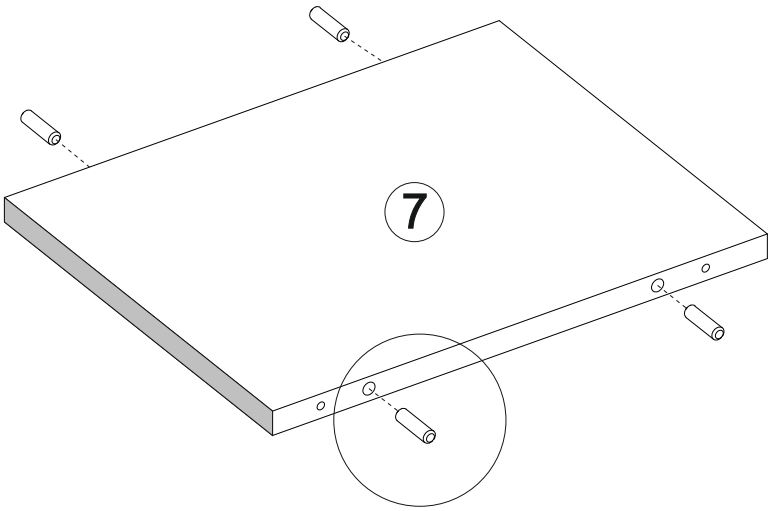

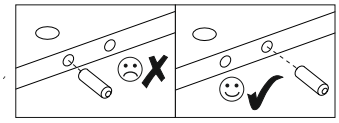

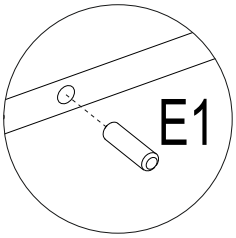

N1

L=35mm x4

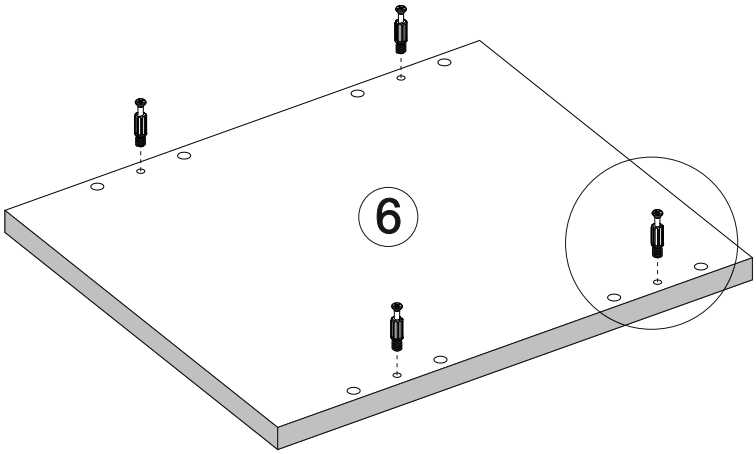

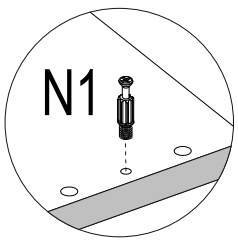

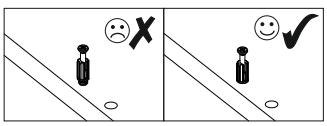

F1

7x50mm x4

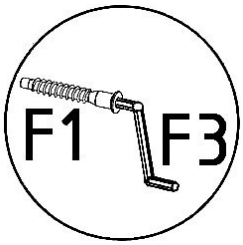

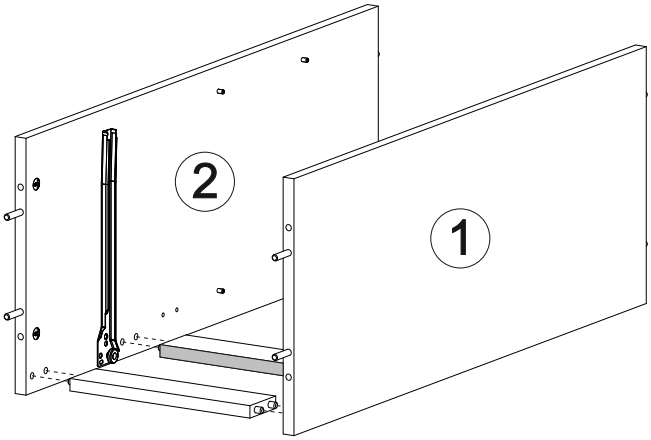

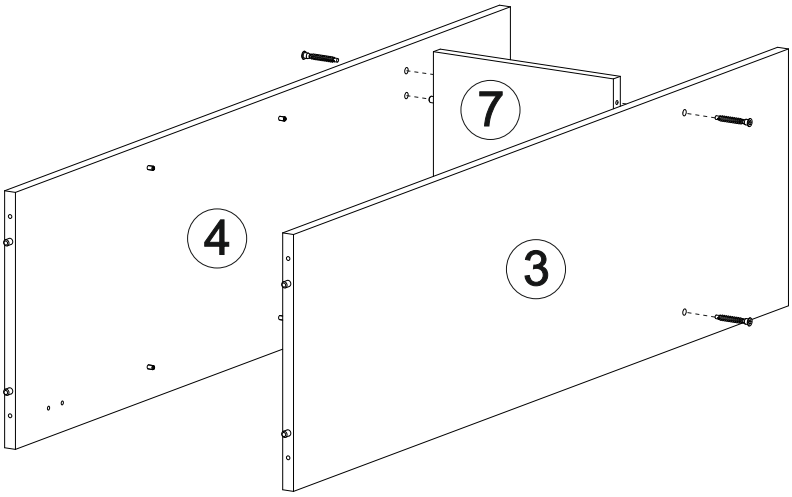

F1

7x50mm x12

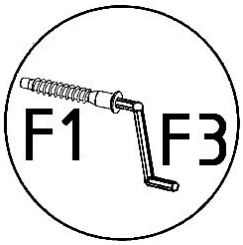

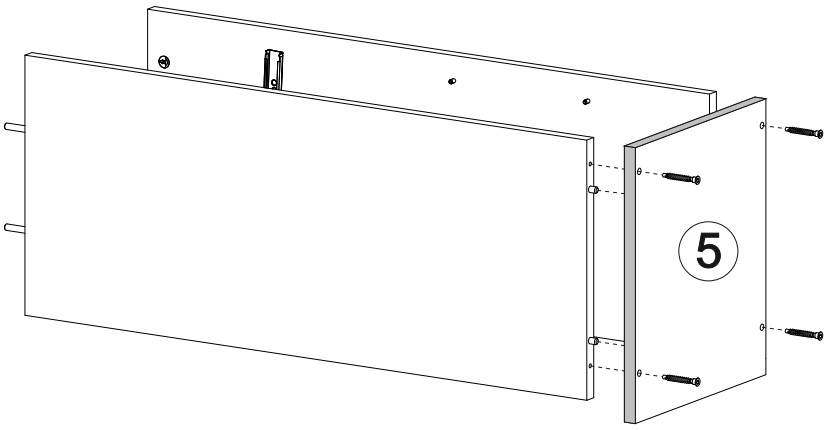

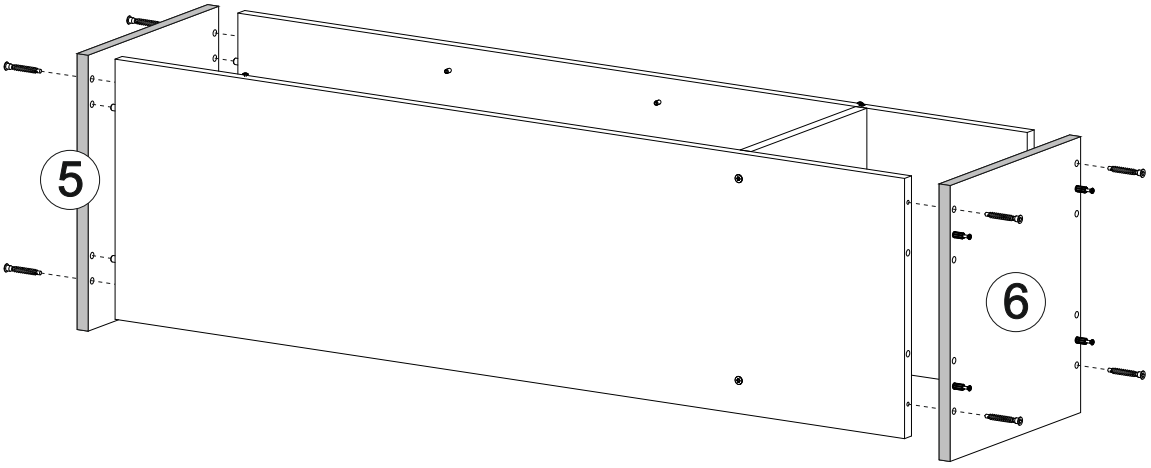

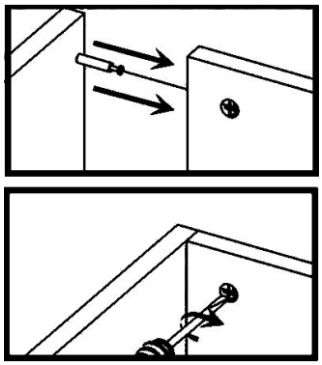

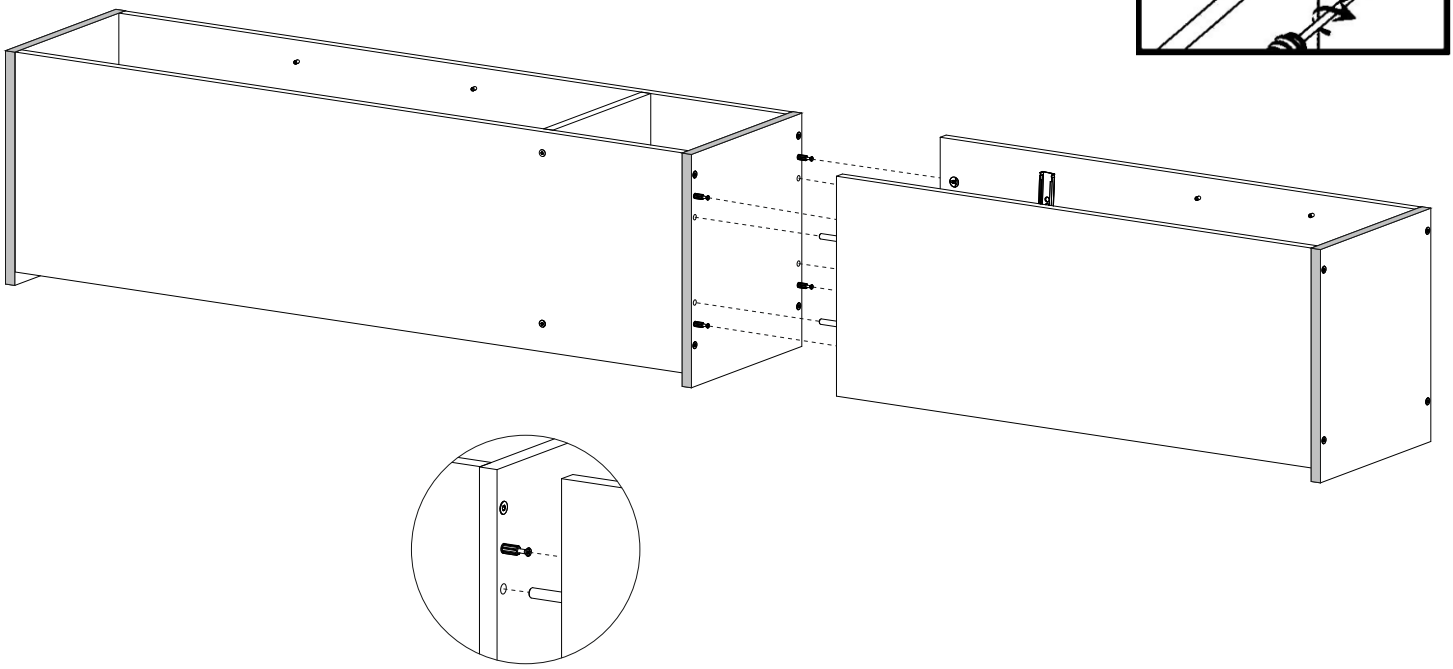

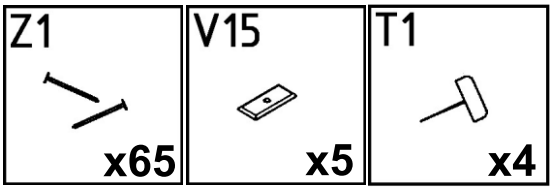
Z1
x65
V15
x5
T1
x4

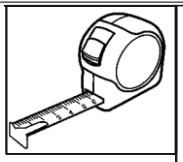

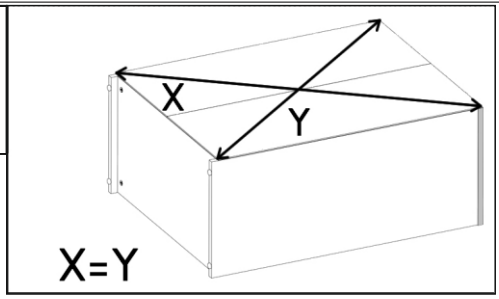
X
Y
X=Y

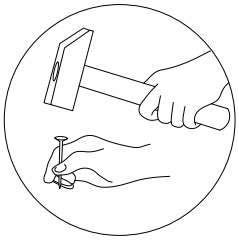

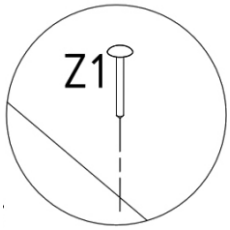
Z1

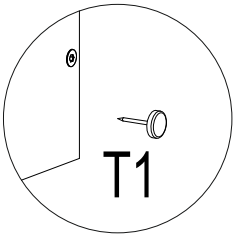
T1

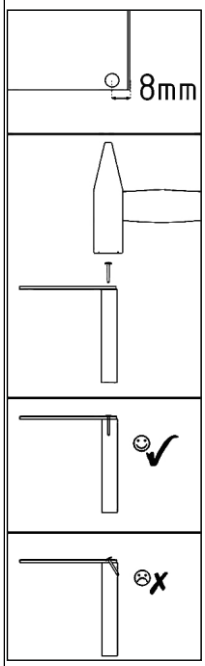
8mm

15
16


V15
Z1

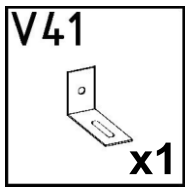
V41
x1

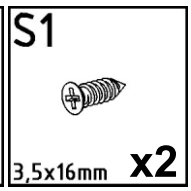
S1
3,5x16mm
x2

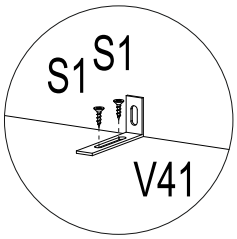
S1
S1
V41

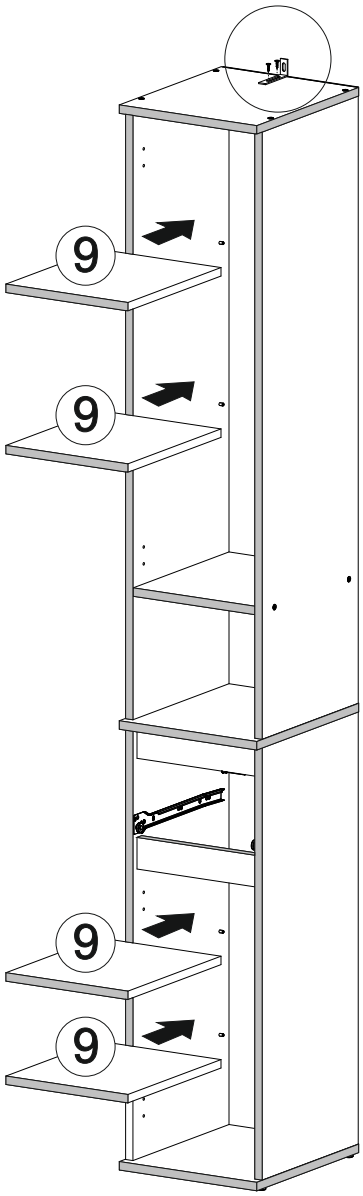
9
9
9
9


V41

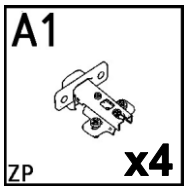
A1
ZP
x4


S1
3,5x16mm
x8

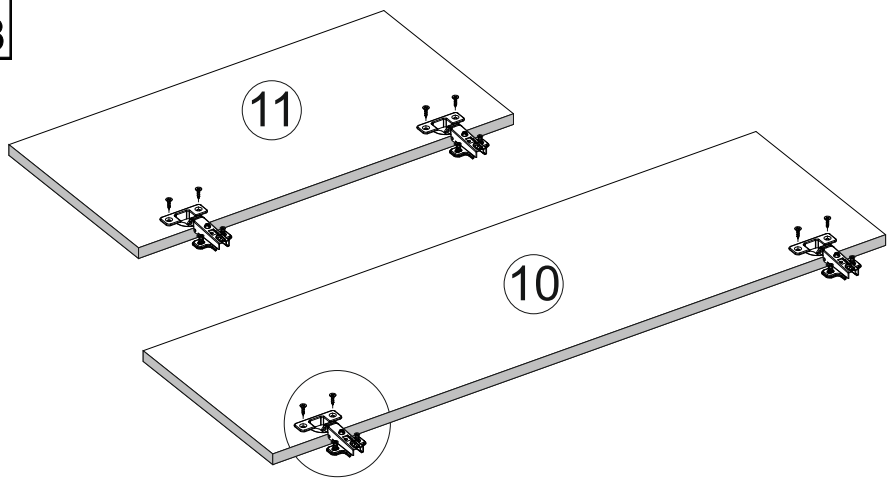
11
10

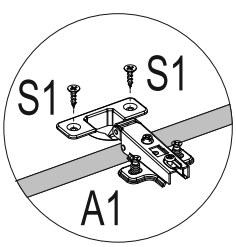
S1
S1
A1

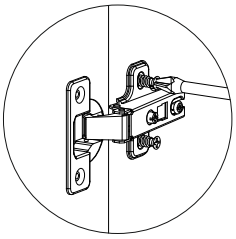

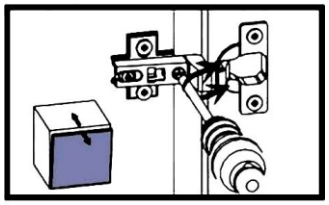

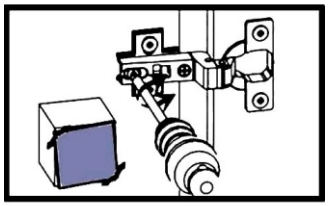

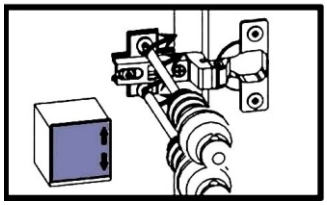

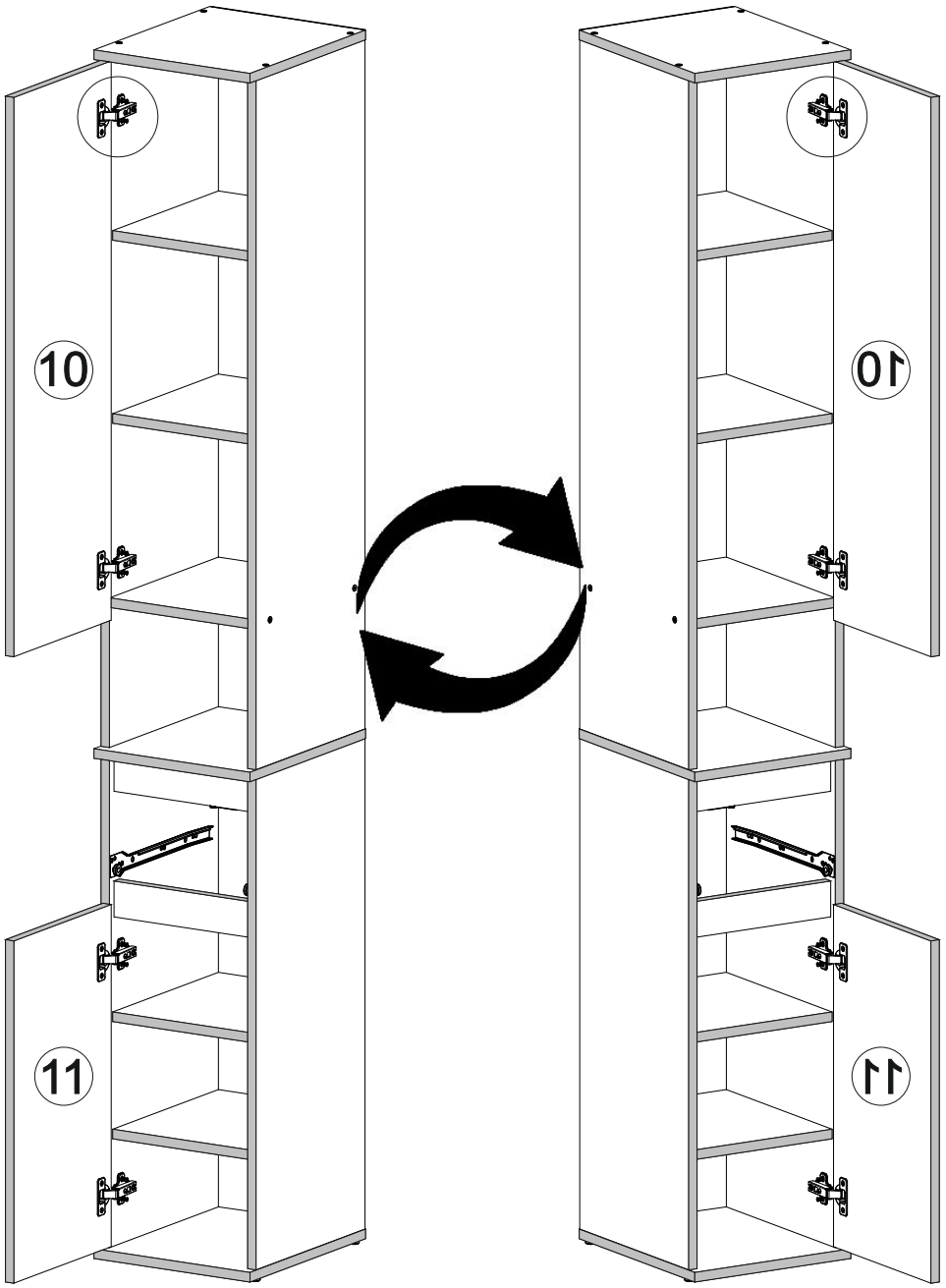

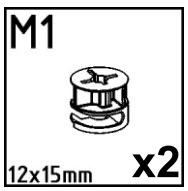

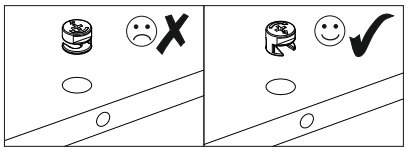

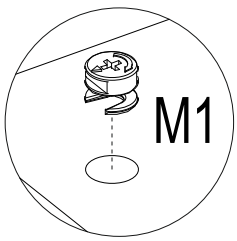

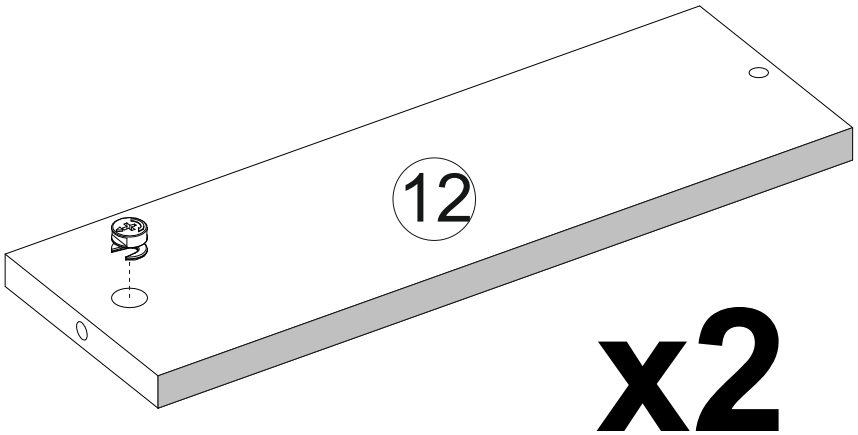

x2

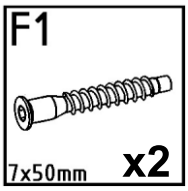
F1
7x50mm
x2

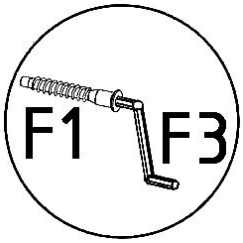
F1
F3

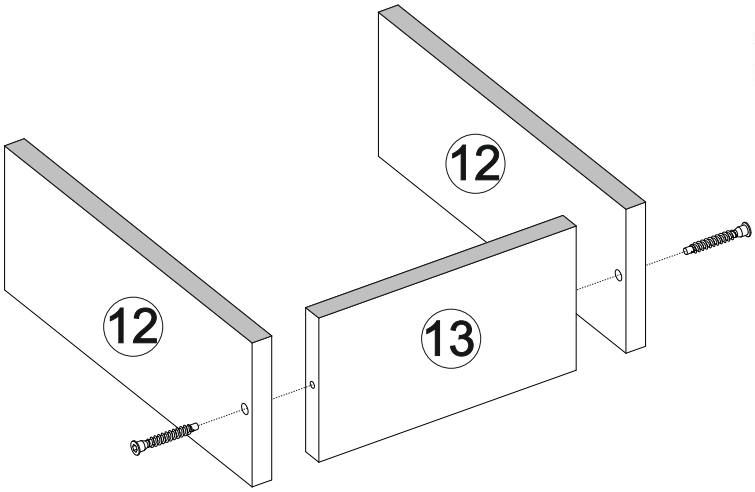
12
12
13

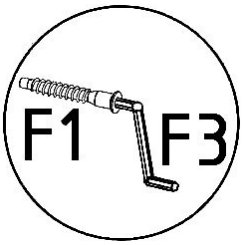
F1
F3


N1
L=35mm
x2

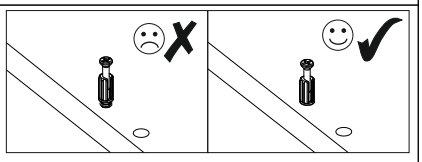

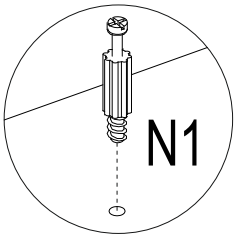
N1

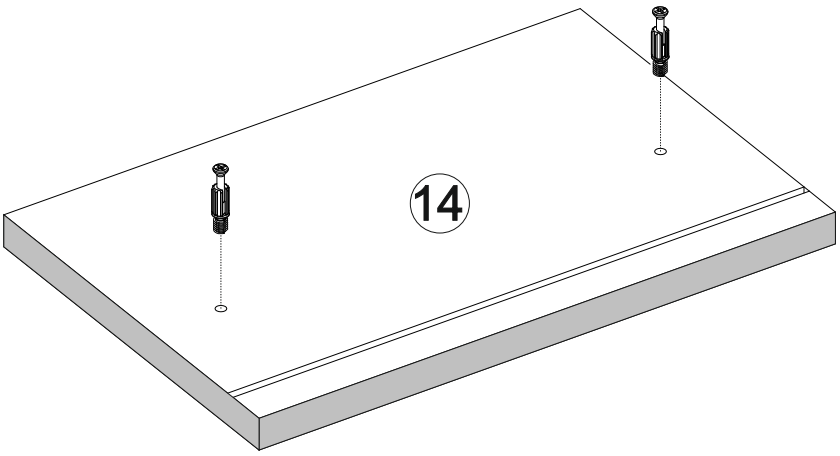
14

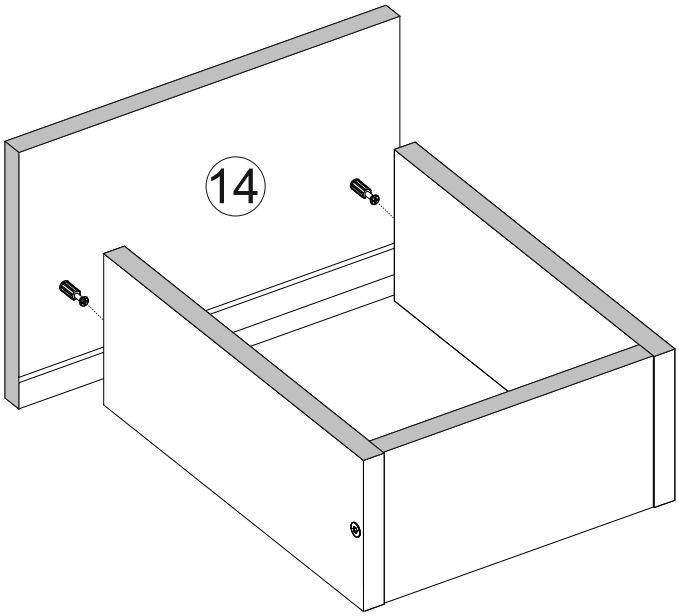
14

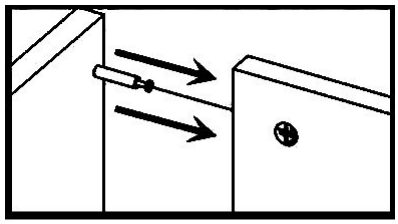

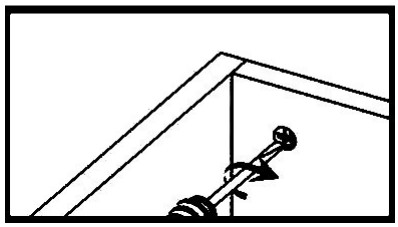

Z1
x5

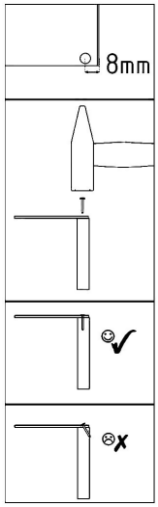

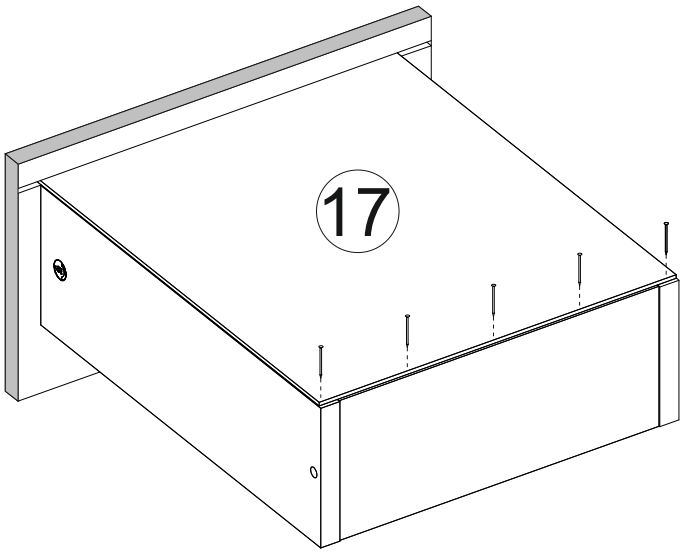

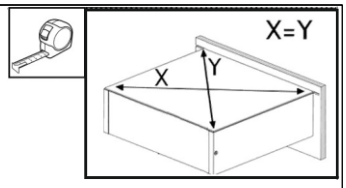

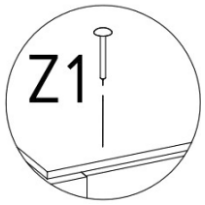

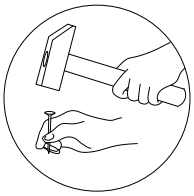

P2
L=300mm x1

S1
3,5x16mm x4

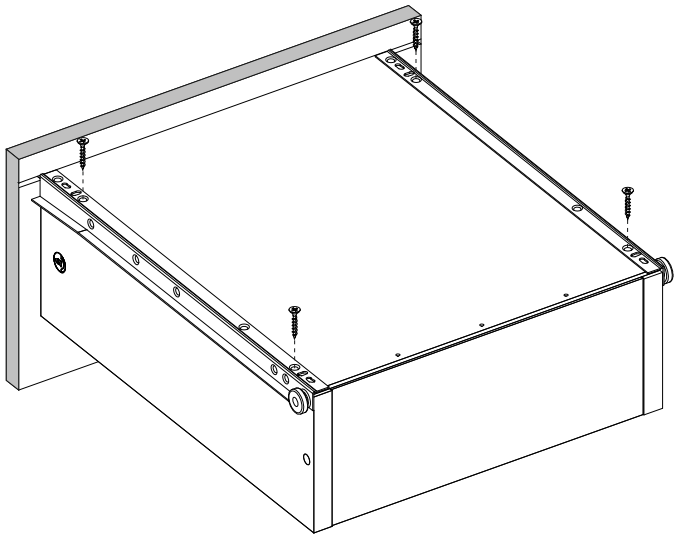

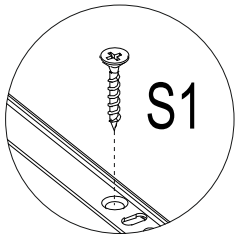

B2
ø12/4mm x4

B1
ø17/4mm x2

